4: TROUBLESHOOTING MANUAL

GV5/GV3.5 TRANSMITTER

Document ID:	NHB-GV3.5-GV5-TRB
Version:	5.0
Issue Date:	2021-03-01
Status:	Standard

Making Digital Radio Work

Contact Information

Nautel Limited
10089 Peggy's Cove Road
Hackett's Cove, NS Canada B3Z 3J4

Toll Free: +1.877.6NAUTEL (662.8835)
(Canada & USA only) or
Phone: +1.902.823.3900 or
Fax: +1.902.823.3183

Nautel Inc.
201 Target Industrial Circle
Bangor, Maine USA 04401

Phone: +1.207.947.8200
Fax: +1.207.947.3693

Customer Service (24-hour support)
+1.877.628.8353 (Canada & USA only)
+1.902.823.5100 (International)

Email: support@nautel.com
Web: www.nautel.com

The comparisons and other information provided in this document have been prepared in good faith based on publicly available information. For verification of materials, the reader is encouraged to consult the respective manufacturer's most recent publication on the official website or through contact with Customer Service.

© Copyright 2018 NAUTEL. All rights reserved.

CONTENTS

Contact Information 4.iii

RELEASE CONTROL RECORD 4.vii

RESPONDING TO ALARMS 4.1.1

Corrective Maintenance 4.1.1
Electrostatic Protection 4.1.3
Identifying an Alarm 4.1.4
Accessing the Inside of the Transmitter 4.1.31
Troubleshooting Tips 4.1.33
Replacement Procedures 4.1.45
RF Power Module Replacement 4.1.46
Troubleshooting RF Power Modules 4.1.48
Remote Interface PWB Replacement 4.1.55
Fan Tray Cooling Fan Replacement 4.1.57
Reject Load Replacement 4.1.59
Controller Replacement 4.1.61
Single-Board Computer (SBC) Replacement 4.1.63
Controller PWB Replacement - Controller 4.1.66
Exciter Replacement 4.1.68
Exciter/Control PWB Replacement - Exciter 4.1.70
Pre-Amplifier PWB Replacement - Exciter 4.1.73
Module Control/Interface PWB Replacement 4.1.76
Power Supply Interface PWB Replacement 4.1.78
UPS Interface Power Supply Replacement 4.1.79
Power Module Combiner PWB (NAPH06) Replacement 4.1.81
Power Module Combiner PWB (PR82C) Replacement 4.1.84

Parts Lists 4.2.1
Family Tree 4.2.1
How to Locate Information About a Specific Part 4.2.1
Column Content 4.2.2

Wiring/connector lists 4.3.1
Wiring Lists Provided 4.3.1
Wiring Lists Not Provided 4.3.1
Connector Mating Information 4.3.1
Wire Colours 4.3.1
Printed Wiring Board Patterns 4.3.1

Reading Electrical Schematics 4.4.1
Component Values 4.4.1
Graphic and Logic Symbols 4.4.1
Reference Designations 4.4.1
Unique Symbols 4.4.2
Identifying Schematic Diagrams 4.4.2
Structure of Schematics 4.4.3
Locating Schematic Diagram(s) for a Functional Block 4.4.3
Locating a Part or Assembly on a Schematic 4.4.4

Mechanical Drawings 4.5.1
Identifying Mechanical Drawings 4.5.1
Content of Mechanical Drawings 4.5.1
Locating a Part or Assembly on a Mechanical Drawing 4.5.1

List of terms 4.6.1

RELEASE CONTROL RECORD

ISSUE	DATE	REASON
5.0	2021-03-01	Release 5 of GV5/GV3.5 (NARF71D/02). Supports software version GV SW 4.4.1 and later.

SECTION 4.1: RESPONDING TO ALARMS

This section provides instructions you need when performing troubleshooting on the GV5/GV3.5 transmitter. This section includes the following topics:

- Corrective Maintenance
- Electrostatic Protection - see page 4.1.3
- Identifying an Alarm - see page 4.1.4
- Accessing the Inside of the Transmitter - see page 4.1.31
- Troubleshooting Tips - see page 4.1.33
- Replacement Procedures - see page 4.1.45

If none of the procedures and alarms described in this section address your problem, contact Nautel for assistance. See "Technical Support" in the Pre-Installation Manual.

Corrective Maintenance

Corrective maintenance procedures consist of identifying and correcting defects or deficiencies that arise during transmitter operation. Local and/or remote alarm signals are generated when a malfunction occurs. If an alarm condition is caused by a malfunction in the RF power stage, the transmitter may maintain operation at a reduced RF output level. The nature of the fault – and station policy – will dictate whether an immediate maintenance response is necessary. Fault analysis and rectification may be conducted from three different levels, with a different technical competence level required for each: on-air troubleshooting, remote or local, and off-air troubleshooting.

CAUTION! The transmitter contains many solid state devices that may be damaged if subjected to excessive heat or high voltage transients. Take every effort to ensure that circuits are not overdriven or disconnected from their loads while turned on.

On-Air Troubleshooting

On-air troubleshooting can be performed from a remote location, or locally at the transmitter site.

Remote Troubleshooting

Remote on-air troubleshooting consists of monitoring the transmitter's radiated signal using an on-air monitor or via a LAN connection, and observing the status of each remote fault alarm indicator. Information obtained from these sources should enable an operator to decide whether an alarm response may be deferred to a more convenient time, an immediate corrective action must be taken, or if a standby transmitter must be enabled (if one is available). It is recommended that the significance of remote indications, and the appropriate responses, be incorporated into a station's standard operating procedures. Refer to "Identifying an Alarm" on page 4.1.4 to determine the remedial action required for a given fault.

Local Troubleshooting

Local on-air troubleshooting consists of monitoring the transmitter's integral meters and fault alarm indicators. Analysis of this data will normally identify the type of fault, and in most cases will determine what corrective action must be taken. Refer to "Identifying an Alarm" on page 4.1.4 to determine the remedial action required for a given fault.

The power amplifier stage contains an integral modular reserve (IMR) feature. This feature permits the transmitter to operate at a reduced RF output level when a malfunction occurs in one of its power modules. Station operating procedures will dictate whether a reduced RF output level is acceptable. When a reduced RF output level can be tolerated, replacement of the defective RF power module may be deferred to a convenient time.

A defective RF power module may be removed from the transmitter for servicing, while the transmitter is operating, provided that the conditions in the removal instructions detailed in "Removing an RF Power Module" on page 4.1.46 are met.

Off-Air Troubleshooting

Off-air troubleshooting must be performed when the replacement of a defective RF power amplifier module, or routine on-air calibration adjustments, will not restore operation.

It is recommended that the transmitter's output be connected to a precision 50 Ω resistive dummy load (rated for at least the maximum transmitter power rating) before starting off-air troubleshooting procedures. If an appropriate dummy load is not available, troubleshooting for a majority of faults can be performed with RF power stage turned off. The transmitter may remain connected to its antenna system for these procedures.

NOTE: Reduce the RF output level to a minimal value when troubleshooting faults in the power amplifier stage while the transmitter's RF output is connected to the antenna system.

Electrostatic Protection

The transmitter's assemblies contain semiconductor devices that are susceptible to damage from electrostatic discharge. The following precautions must be observed when handling an assembly which contains these devices.

> **CAUTION!** Electrostatic energy is produced when two insulating materials are rubbed together. A person wearing rubber-soled shoes, walking across a nylon carpet or a waxed floor, can generate an extremely large electrostatic charge. This effect is magnified during periods of low humidity. Semiconductor devices such as integrated circuits, field-effect transistors, thyristors and Schottky diodes may be damaged by this high voltage unless adequate precautions are taken.

Electrical Discharging of Personnel

Personnel should be electrically discharged by a suitable grounding system (e.g., anti-static mats, grounding straps) when removing an assembly from the transmitter, and while handling the assembly for maintenance procedures.

Handling/Storage

An assembly should be placed in an anti-static bag when it is not installed in a host transmitter, or when it is not undergoing maintenance. Electronic components should be stored in anti-static materials.

Tools/Test Equipment

Testing and maintenance equipment – including soldering and unsoldering tools – should be suitable (i.e., grounded tip) for contact with static sensitive semiconductor devices.

Stress Current Protection

Every precaution should be taken to ensure the static sensitive semiconductor devices are protected from unnecessary stress current. This is achieved by ensuring that current is not flowing when an electrical connection is broken, and that voltages are not present on external control/monitoring circuits when they are connected.

Identifying an Alarm

You can identify an alarm locally by viewing the local or remote AUI's Transmitter Status page (see "AUI Transmitter Status Page Checks"). As a backup option, you can also view the front panel of the controller module (A4) (see "Controller Module Front Panel Alarm Checks" on page 4.1.7).

AUI Transmitter Status Page Checks

If an alarm exists and is being recognized by the transmitter (i.e., the Status button at the bottom of the AUI display will be red), it is displayed on the transmitter status page (see Figure 4.1.1 on page 4.1.5). The Device name indicates the sub-system origin of the alarm. The sub-systems that can be displayed are:

- Controller: All alarms in this sub-system apply to the controller.
- Exciter A or B: All alarms in this sub-system apply to an exciter (A or B).
- Rack #: All alarms in this sub-system apply to a rack (cabinet) (only 1 for GV5/GV3.5).
- RF Module #: All alarms in this sub-system apply to a specific RF power module (1 through 2)

Figure 4.1.1: Transmitter Status Page

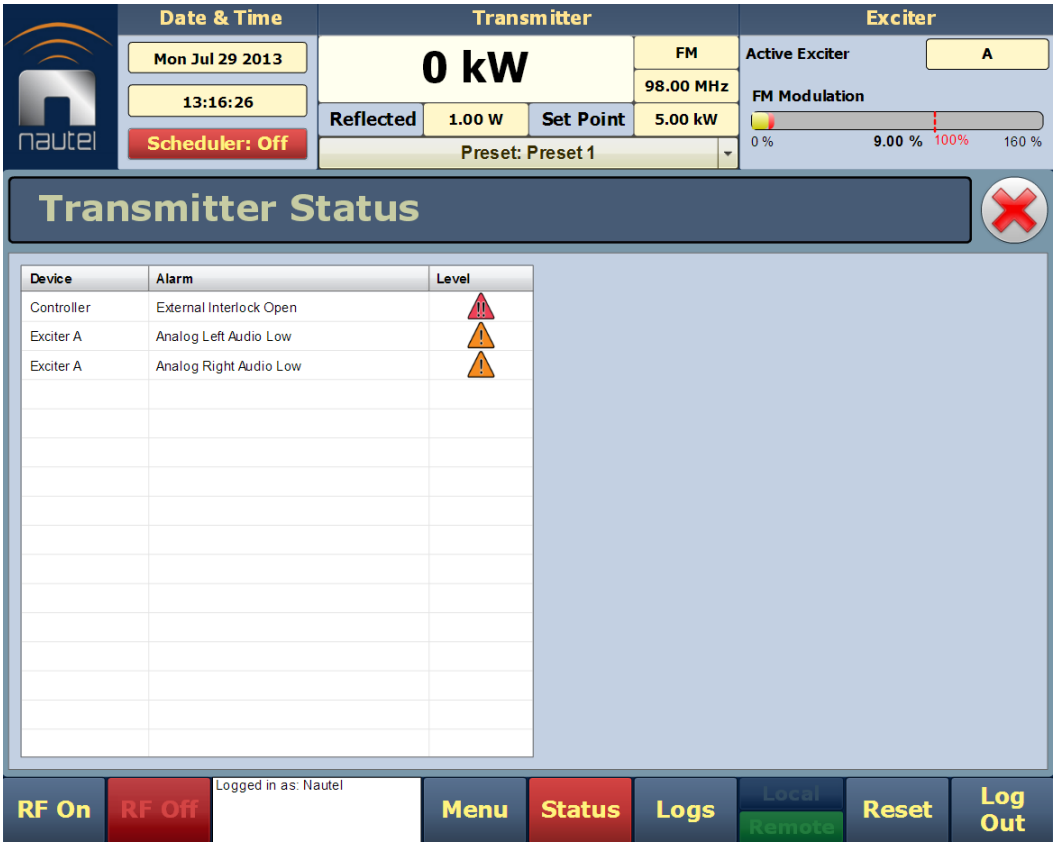

1. Click the Status button to go to the Transmitter Status page (see Figure 4.1.1). View the list of active faults. Alarms are listed by their origin (Device column), then by name (Alarm column), and then by severity (Level column) [single orange ! indicates low severity (RF output not affected); single red ! indicates medium severity (RF output is reduced); two red ! indicates high severity (RF output is inhibited)].

2. Attempt to clear any latching alarms by pressing the Reset button on the bottom banner of the page. If the alarm persists, it will not be cleared from the display.

3. Locate the alarm name in Table 4.1.1 on page 4.1.10 to determine the cause of the alarm and perform any recommended procedures in the Description and Troubleshooting Action column. This may also lead to replacing a suspect PWB, power supply or fan, as detailed in "Replacement Procedures" on page 4.1.45.

NOTE: Table 4.1.1 on page 4.1.10 contains a column for most **Alarms** that can occur, sorted alphanumerically for each sub-system, including both the names displayed on the AUI and, if different, the controller UI (in parentheses). The **Description and Troubleshooting Action** column provides a brief description of the alarm, troubleshooting tips and a cross-reference to more detailed troubleshooting, as applicable.

4. If troubleshooting and subsequent replacement of a suspect PWB or module causes the alarm to disappear from the Transmitter Status page, the alarm has been successfully cleared. If the fault condition does not clear, contact Nautel.

NOTE: Before undertaking any troubleshooting, record all AUI meter readings and note if any other alarms are displayed on the Transmitter Status page. Record all alarms. The most convenient way to do this is by using the remote AUI's User Settings -> Critical Parameters page to capture and copy all alarms (see "Capturing Critical Parameters" in the Operations & Maintenance Manual). Another method is to use a web browser over a LAN connection to save screen shots of critical status, meter and alarm pages. From the Meter List View page, press the information (i) button for each sub-device (Controller, Exciter, Rack and Modules) to view (and save) detailed information (see "Viewing Real Time Meters - using the AUI" in the Operations & Maintenance Manual).

Controller Module Front Panel Alarm Checks

There two ways to check for alarms on the front panel:

- Alarm/Status LEDs
- View Alarms Screen - see page 4.1.8

Alarm/Status LEDs

There are four LEDs on the left-hand side of the LCD display that provide information about the operational status of various sections of the transmitter - Exciter, Power Amplifier, Output Network and Power Supply (see Figure 4.1.2). The LEDs can glow green, amber or red. Typically, green indicates normal operation, amber indicates a warning, and red indicates a fault or error.

Figure 4.1.2: Controller Module Alarm/Status LEDs

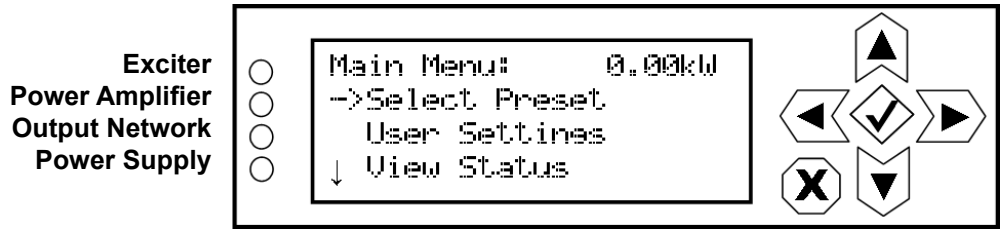

When an LED is:

- Green - transmitter is on, with no known faults.
- Amber - a fault is present that may cause a reduction in RF power, but the transmitter is still producing RF power.
- Red - a fault is present and the transmitter is not producing RF power.

When a fault is present, the transmitter may still produce an RF output. In this case, or if the transmitter has shut down, you should schedule and commence more in-depth fault diagnosis. See "View Alarms Screen" on page 4.1.8.

View Alarms Screen

If an alarm exists and is currently being recognized by the transmitter system, it is displayed in the View Alarms screen (Main Menu -> View Status -> View Alarms) of the controller UI display (see Figure 4.1.3).

Figure 4.1.3: View Alarms Screen

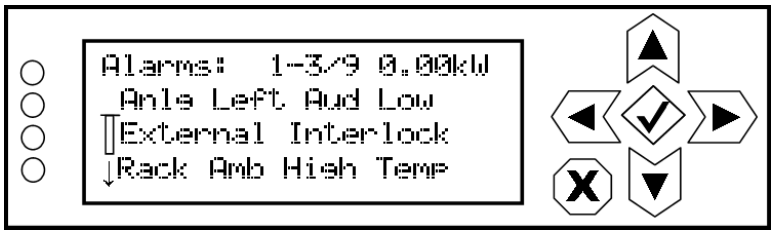

1. Scroll through the View Alarms screen to view the active faults.
2. Attempt to clear any latching alarms by pressing the checkmark button in the Main Menu -> Reset Alarms screen. If the alarm persists, it will not clear from the display.
3. Locate the alarm name in Table 4.1.1 on page 4.1.10 to determine the cause of the alarm and perform any recommended procedures in the Description and Troubleshooting Action column. This may also lead to replacing a suspect PWB, power supply or fan, as detailed in "Replacement Procedures" on page 4.1.45.

NOTE: Before undertaking any troubleshooting, record all meter readings and note if any other alarms are displayed on the View Alarms page. Record all alarms.

NOTE: Table 4.1.1 on page 4.1.10 contains a column for most **Alarms** that can occur, sorted alphanumerically for each sub-system, including both the names displayed on the AUI and, if different, the controller UI (in parentheses). The **Description and Troubleshooting Action** column provides a brief description of the alarm, troubleshooting tips and a cross-reference to more detailed troubleshooting, as applicable. The **Front Panel LED (color)** column gives a brief description of the severity of the alarm recorded by the Controller/Exciter. **Green** indicated operational with no faults, **Amber** indicates a non-critical fault and **Red** indicates an inhibiting fault.

4. If troubleshooting and subsequent replacement of a suspect PWB or module causes the alarm to disappear from the View Alarms screen, the alarm has been successfully cleared. If the fault condition does not clear, contact Nautel.

Exciter Front Panel Alarm Checks

There are two LEDs on the left-hand side of the Exciter that provide information about its operational status - Power and Status (see Figure 4.1.4). The Power LED will illuminate green when a valid LVPS input voltage is applied to the A2J1 connector and +5V is present to power the LED. The tri-color Status LED can be green, amber or red and be solid or blinking.

When the Status LED is:

- Green (solid) - exciter is operational, with no known faults
- Amber (solid) - controlled inhibit
- Red (solid) - inhibiting fault
- Green/Amber (blinking) - exciter is operational with non-critical faults
- Green/Red (blinking) - exciter is operational with critical faults
- Amber/Red (blinking) - inhibiting fault (latching)

Figure 4.1.4: Exciter Front Panel

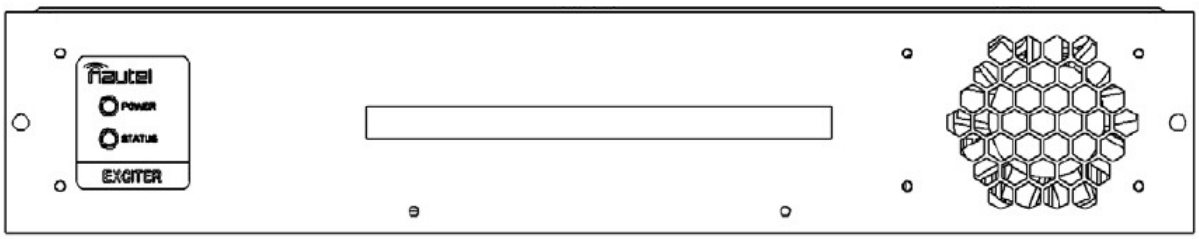

Table 4.1.1: Troubleshooting Alarms

Device and Alarm Name (AUI, UI)	Controller Front Panel LED (color)	Description and Troubleshooting Action
Controller: AC Summary (AC Summ)	-	Not displayed in AUI or UI status. Configurable as a remote output. This alarms occurs if there are any ac input related alarms present. Check for other specific ac fault alarms.
Controller: All PAs Inactive	Power Amplifier (red)	This alarm indicates that all of the transmitter's power amplifiers are inactive due to external conditions such as ac loss, removal of power supply modules or RF power modules, or faults in the power supply modules or RF power modules. If there are power supply module or RF power module related alarms present, follow the associated troubleshooting procedure.
Controller: Audio Loss Summary	Exciter (red)	Not displayed in AUI or UI status. Configurable as a remote output. This alarms occurs if there are any audio loss alarms present. Check for specific audio loss alarms and troubleshoot accordingly. Ensure the preset audio settings agree with the audio being applied to the exciter.
Controller: Auto Changeover Occurred (Auto Changeover)	Exciter (amber)	This alarm occurs when the controller has initiated an exciter changeover to the standby exciter, due to a possible fault with the main exciter.
Controller: Changeover in Progress (In Changeover)	Exciter (red)	This alarm occurs only while an exciter changeover is in progress. It will clear once the changeover is complete.
Controller: Combiner Match	Output Network (red)	This alarm occurs if there is an excessive amount of power in the transmitter combining stage that cannot be accounted for. This may be the result of a fault in the combiner.
Controller: Config File Not Found (Cfg File Not Found)	Exciter (red)	This alarm occurs when the controller does not find a valid configuration file to load at power-up. This alarm is unlikely, but may occur during replacement of a controller module. It clears when the correct settings are entered.
Controller: CPLD Version Mismatch (CPLD Ver Mismatch)	Exciter (red)	This alarm occurs when there is an incompatible software release in the controller module's CPLD. Update the software to clear the fault.
Controller: Current Imbalance	Output Network (red)	This alarm occurs if the Combiner Match alarm occurs due to a PA current imbalance in the RF power modules

Device and Alarm Name (AUI, UI)	Controller Front Panel LED (color)	Description and Troubleshooting Action
Controller: Cutback Active	Output Network (amber)	This alarm occurs whenever the transmitter experiences a cutback. A cutback (reduction in power) occurs when repeated shutback alarms occur within a prescribed time period. Shutbacks occur when the transmitter's peak reflected power exceeds 2:1 due to a transient SWR condition (arc or lightning) within the output transmission line or antenna system. The transmitter shuts back and recovers to a series of cutback levels (depending on the severity of the alarm), with each level being a 15% reduction in power from the power attained before the last shutback. Inspect the output transmission line for punctures or damage. After repairing damage, or if no damage is found, attempt to reset the latched condition.
Controller: Digital Player Audio Low	Exciter (red)	This alarms occurs if the audio player is in use on the SBC, but no digital audio is detected by the controller.
Controller: Discharging PA Volts (Discharging PA V)	PS (red)	This alarm occurs when the transmitter has initiated a shutback sequence, and residual PA voltage energy stored in the capacitors in the power supplies and PAs is being discharged. During a shutback sequence, the RF drive to the PAs is turned off immediately after the event, and this occurs faster than the power supply modules can be inhibited. Therefore, PA voltage is still being applied to the capacitors with no drive to discharge the energy. To discharge the stored energy from the capacitors, the PA bias is increased to a discharge level after the power supplies have been inhibited. This causes the stored energy to be dissipated through dc current in the FET. This alarm should only occur with a Residual PA Volts Present alarm. See Residual PA Volts Present alarm for more information.
Controller: Door Open	Exciter (amber)	This alarm occurs if the transmitter's front door is open, which inhibits the monitor cooling fans.
Controller: Entered Firmware Upgrade (Entr Firmware Upgr)	Exciter (red)	This alarm occurs when the transmitter is in "firmware upgrade" mode. It should only be displayed during a transmitter software upgrade.
Controller: Exciter A or B Offline	Exciter (red)	This alarm occurs if the serial communication fails between the controller and the exciter, or a problem has occurred with the exciter. Check all connections to the exciter and make sure that its controller front panel power LED is on.
Controller: Exciter Audio Reset	Exciter (red)	This alarms occurs if the audio processing within the exciter required a reset. if this alarm is re-occurring, replace the controller (see "Controller Replacement" on page 4.1.61).
Controller: Exciter Summary (Exciter Summ)	Exciter (amber)	This alarms occurs if there are any exciter related alarms present. Check for specific exciter related alarms.

Device and Alarm Name (AUI, UI)	Controller Front Panel LED (color)	Description and Troubleshooting Action
Controller: External Interlock Open (External Interlock)	Exciter (red)	The external interlock input wired to the controller (A4) or remote interface PWB (A16), if used, is open. Check the interlock connection between REMOTE I/O-A pins 19 and 20 on the controller (verify a ground potential at pin 19) or remote interface PWB J2 pins 19 and 20 or TB1-1 and 2. If the interlock is intact, check all external interlock switches. Otherwise, suspect a problem with the interlock circuitry on the controller or remote interface PWB.
Controller: External Summary	-	Not displayed in AUI or UI status. Configurable as a remote output.This alarms occurs if there are any external related alarms present. Check for specific external related alarms and troubleshoot accordingly.
Controller: Fan Fail	Output Network (amber)	This is an indicational alarm only that is displayed when the controller's cooling fan has been enabled and the speed of the fan is below 2000 RPM.
Controller: Forward Power Limiting (Fwd Power Limiting)	Output Network (amber)	When the High Forward Power alarm is active, this alarm occurs if the high forward power limiting threshold is exceeded [1.063 times the maximum power setting for all modes; e.g., 5,846 W (GV5) or 4,384 W (GV3.5) for FM mode]. The transmitter will fold back the forward power each time the threshold is exceeded. This alarm occurs only if the controller ALC cannot respond fast enough to transmitter load changes. Suspect the module control/interface PWB (A3).
Controller: Forward Power Shutdown (Fwd Power Shutdown)	Output Network (red)	This alarm occurs if the transmitter tries to reduce the forward power below minimum due to repeated Forward Power Limiting alarms. The transmitter latches off. See Controller: Forward Power Limiting for troubleshooting tips.
Controller: High Forward Power (High Fwd Power)	Output Network (amber)	This alarm occurs if the transmitter's average forward power exceeds the high forward power threshold [1.036 times the maximum power setting for all modes; e.g., 5,698 W (GV5) or 4,274 W (GV3.5) for FM mode]. This alarm occurs only if the controller ALC cannot respond fast enough to transmitter load changes. Suspect the module control/interface PWB (A3).
Controller: High Reflected Summary	Output Network (amber)	Not displayed in AUI or UI status. Configurable as a remote output.This alarms occurs if there are alarms present that are related to high reflected power on the transmitter's RF output. Check for specific reflected power related alarms and troubleshoot accordingly.
Controller: High Reject Power (High Reject)	Output Network (amber)	This alarm occurs if any of the transmitter's reject loads' average power exceeds the high reject power threshold (1200 W). Typically, high reject power is a result of RF power module failure or removal, or PA power supply failure or removal.

Device and Alarm Name (AUI, UI)	Controller Front Panel LED (color)	Description and Troubleshooting Action
Controller: High RF Drive	Exciter (red)	This alarm occurs if the RF drive power from the exciter is greater than the high threshold (45% above the setpoint). This may be the result of a calibration problem with either the exciter or the transmitter RF drive sample. Check all connections to the exciter.
Controller: High Splitter Temperature (High Splitter Temp)	Exciter (amber)	This alarm occurs if the temperature sensed by the RF drive splitter (A7) exceeds 75°C (167°F). The temperature typically increases due to PA failures or RF module removal, but may also be the result of a blockage or a failure of the reject fans. Check the reject load's associated fan tray and replace fan(s) if necessary (see "Fan Tray Cooling Fan Replacement" on page 4.1.57).
Controller: High SWR	Output Network (amber)	This alarm occurs if the transmitter's average reflected power exceeds the high SWR threshold (140 W). The GV5/GV3.5 takes no action on this alarm. Inspect the antenna and transmission line system for damage or de-tuning.
Controller: High SWR Shutdown	Output Network (red)	This alarm occurs if the transmitter tries to reduce the forward power below a level that is equivalent to a 3:1 VSWR (user-configurable) at the SWR Foldback threshold due to a gradually degrading load match. This alarm causes the transmitter to latch off. Inspect the antenna and transmission line system for damage or de-tuning.
Controller: High Temperature Summary	-	Not displayed in AUI or UI status. Configurable as a remote output.This alarms occurs if there are high temperature related alarms occurring. Check for specific temperature related alarms and troubleshoot accordingly.
Controller: Host Network Down	Exciter (amber)	This alarm indicates that the microcontroller that runs the remote interfacing applications is unable to acquire an IP address. When this alarm is present, it will not be possible to access any of the remote AUI functionality. Check that the Ethernet cable is properly connected to the LAN2 connector on the rear of the controller and to the LAN connector on the remote interface PWB (A16). If the alarm is still present see "Network Setup" on page 3.2.147 of the Operations and Maintenance Manuals for information on setting up the network connection. Disable the alarm by setting DHCP to OFF and setting the IP Address to all zeroes (i.e. 0.0.0.0).
Controller: Host Not Booted	Exciter (amber)	This alarm indicates that the controller's host has not finished booting. The remote AUI will not yet be available. This alarm normally occurs with an ac loss or software upgrade. It will clear when the host completes booting.
Controller: Host Not Responding	Exciter (red)	This alarm indicates that the controller's host is not communicating with the rest of the transmitter. If the watchdog function is enabled, the DSP will automatically reset the host. If this alarm persists, the controller may require reprogramming or replacement. If necessary, replace the single board computer (A4A1) (see "Single-Board Computer (SBC) Replacement" on page 4.1.63).

Device and Alarm Name (AUI, UI)	Controller Front Panel LED (color)	Description and Troubleshooting Action
Controller: Local UI Failure (UI Failure)	Exciter (red)	This alarm occurs if there is a fault with the LCD user interface (UI), preventing it from being used to control the transmitter. The transmitter will automatically switch to remote control mode to allow use of the AUI or digital I/O.
Controller: Low AC Operation	Power Supply (red)	This alarm occurs if the ac input voltage is less than 175 V ac, but greater than 90 V ac. Transmitter RF output power will be limited to approximately 33% of maximum power or to the current setpoint, whichever is less.
Controller: Low Battery	Exciter (amber)	This alarm occurs if the backup battery voltage falls below an acceptable level (2.7 V). The GV5/GV3.5 takes no action on this alarm. Use a digital multimeter to measure the battery voltage (with ac power on). If the battery voltage is low, replace the battery. If battery voltage is OK, cycle ac power (off, then on). If the alarm does not clear, check the controller PWB (A4A2).
Controller: Low Battery/Memory Summary	Power Supply (red)	Not displayed in AUI or UI status. Configurable as a remote output.This alarms occurs if there is a specific battery or memory related alarm present. Check for specific alarms and troubleshoot accordingly.
Controller: Low Efficiency	Output network (amber)	This alarm occurs in conjunction with the Combiner Match alarm to indicate that the transmitter is exhibiting low Dc-RF efficiency.
Controller: Low Forward Power (Low Fwd Power)	Output Network (amber)	This alarm occurs if the transmitter's average forward power is below the low forward power threshold (defaulted to 50% of the setpoint and is user adjustable). Check for associated alarms and follow the associated troubleshooting procedure, if applicable.
Controller: Low RF Drive	Exciter (red)	This alarm occurs if the RF drive power from the exciter is less than the low threshold (70% of the setpoint). This may be the result of a calibration problem with either the exciter or the transmitter RF drive sample. Check all connections to the exciter. Check the RF drive connection between the exciter RF output and the RF drive splitter input.
Controller: LVPS Fail	Power Supply (red)	This alarm occurs if the LVPS voltage is less than 36 V or greater than 53 V. This may be a result of an ac power failure or an LVPS fault. Check the dc output voltage of the suspect LVPS. If the dc voltage is out of tolerance, replace the LVPS module (see "LVPS / Power Supply Module Replacement" on page 4.1.52). If the dc voltage is acceptable, suspect the controller.
Controller: LVPS Shutback	Power Supply (red)	This alarm occurs if the LVPS voltage decreases below 36V while the transmitter is RF on. It will not clear until the LVPS voltage increases above 37V. This alarm triggers to turn off power to the fans to prevent power fluctuations that may cause lock ups on the module control/interface PWB. If the transmitter is connected to a UPS, the controller and remote AUI will still be accessible. Check all LVPS connections and the LED status on the power supply modules.

Device and Alarm Name (AUI, UI)	Controller Front Panel LED (color)	Description and Troubleshooting Action
Controller: Maintenance Required Summary	-	Not displayed in AUI or UI status. Configurable as a remote output.Check for related alarms and troubleshoot accordingly.
Controller: Missing Preset	Exciter (red)	This alarm indicates that there are no presets programmed into the transmitter. The user will not be able to enable RF without first programming a preset.
Controller: Mode/ Frequency Mismatch (Mode/Freq Mismatch)	Exciter (red)	This alarm occurs if there is a mismatch between the operating mode or carrier frequency of the transmitter and one or more of the associated exciters. Suspect a possible communication problem between the controller and exciter(s). The alarm should clear once the transmitter transfers the preset settings to the exciter.
Controller: Monitor Fan Fail	Exciter (amber)	This alarm occurs if the controller has activated the monitor cooling fans and one or both of the monitor cooling fans' tachometer measurement is below 2000 RPM. The front door must be closed (i.e., fans enabled) for this alarm to display.
Controller: Off-Air Summary	-	Not displayed in AUI or UI status. Configurable as a remote output. This alarms occurs if there are any alarms present that cause the transmitter to be in an RF off state. Check for associated alarms, and follow the associated troubleshooting procedure, if present.
Controller: Output Network Summary	Output Network (amber)	Not displayed in AUI or UI status. Configurable as a remote output.This alarms occurs if there are any alarms present that are related to the output network of the transmitter. Check for associated alarms, and follow the associated troubleshooting procedure, if present.
Controller: Overall Summary	-	Not displayed in AUI or UI status. Configurable as a remote output.This alarms occurs if there are any controller related alarms present.Check for associated alarms, and follow the associated troubleshooting procedure, if present.
Controller: PA Pwr Foldback (Per PA Foldback)	Output Network (amber)	This alarm occurs if the control system determines that the calculated dissipation in any FET on a PA is above the high dissipation threshold (350 W), or the forward power being requested from an individual PA [calculated as output power - combiner losses] is greater than the PA output high threshold (850 W). The forward power of the transmitter will be limited to a level such that neither of these thresholds are exceeded. Check for associated alarms. Typically, the assertion of this alarm is the result of a PA failure or RF power module removal, or a high SWR condition.
Controller: Power Amplifier Summary	-	Not displayed in AUI or UI status. Configurable as a remote output. This alarms occurs if there are any alarms present that are related to the power amplifiers. Check for associated alarms, and follow the associated troubleshooting procedure, if present.

Device and Alarm Name (AUI, UI)	Controller Front Panel LED (color)	Description and Troubleshooting Action
Controller: Power Discrepancy	Output Network (amber)	This alarms occurs in conjunction with the Combiner Match alarm to indicate unaccounted for RF power in the combiner.
Controller: Power Supply Summary	-	Not displayed in AUI or UI status. Configurable as a remote output. This alarms occurs if there are any alarms present that are related to the power supplies. Check for associated alarms, and follow the associated troubleshooting procedure, if present.
Controller: PS Current Foldback (PS Curr Foldback)	Power Supply (amber)	This alarm occurs if the transmitter is limiting its output power to avoid drawing excessive current (48 A per supply) from the power supply modules. This may occur when there are PA failures and the transmitter is attempting to compensate to attain the setpoint level. Check for associated alarms, and follow the associated troubleshooting procedure if present.
Controller: Rack # Fault	Power Amplifier (red)	This alarm indicates that a critical fault has occurred in the associated rack, resulting in the transmitter's RF output being inhibited. Check for associated alarms to continue troubleshooting.
Controller: Rack 1 Offline (Rack # Offline)	Power Amplifier (red)	This alarm occurs if serial communication is lost with the associated rack controller (module control/interface PWB). This will inhibit the transmitter's RF output, since this connection is used for monitoring power and adjusting the PA voltage. Check all connections between the controller and the rack. If the alarm persists, suspect a fault with the associated rack's controller (module control/interface PWB).
Controller: Rack Shutback	Power Amplifier (red)	This alarm indicates a connection issue between the controller and the (rack) module control/interface PWB(s), such that the "shutback" signal is unavailable due to a hardware fault (typically, the 9-pin D-sub daisy-chain cable is disconnected). In addition, a "Rack # Offline" alarm will also be present to signify a communication loss between the controller and (rack) module control/interface PWB(s).
Controller: Rack 1 Sync Required	Power Amplifier (red)	This alarm indicates that the Rack data for scale factors or transmitter type is out of sync with the Controller data. This condition is automatically resolved based on the controller's internal rules for transmitter type determination. This alarm will appear in the events log only, and the customer does not need to take any action.
Controller: Rebooted Exciter	Exciter (red)	This is an informational alarm only that is displayed when the watchdog timer reboots the controller's main microcontroller (DSP) or on an ac power interruption.
Controller: Reboot Required (Need Reboot for Settings)	Exciter (red)	This alarm indicates that exciter setup changes have been made, typically via the System Settings page of the AUI. Typically, the DSP will reboot itself automatically; however, if this alarm persists for more than five minutes, cycle the transmitter's ac power (off, then on) to store the changes.

Device and Alarm Name (AUI, UI)	Controller Front Panel LED (color)	Description and Troubleshooting Action
Controller: Reduced Power Summary	Output Network (amber)	Not displayed in AUI or UI status. Configurable as a remote output. This alarms occurs if there are any alarms present that caused the transmitter's RF output power to be reduced. Check for associated alarms, and follow the associated troubleshooting procedure, if present.
Controller: Reject Foldback (Rej Foldback)	Output Network (amber)	This alarm occurs if any of the transmitter's reject load's' average power exceeds its reject power foldback threshold (1500 W). The transmitter's forward power will be reduced each time the alarm occurs, until the fault clears. Typically, high reject power is a result of RF power module failure or removal, or PA power supply failure or removal. Check for associated alarms, and follow the associated troubleshooting procedure if present.
Controller: Reject Shutback	Output Network (red)	This alarm occurs if any of the transmitter's reject load's' average power exceeds its reject power shutback threshold (1800 W). The transmitter will be shut back and attempt to find a safe operating power level by entering reject foldback mode. Typically, high reject power is a result of RF power module failure or removal, or PA power supply failure or removal. Check for associated alarms, and follow the associated troubleshooting procedure if present.
Controller: Residual PA Volts Present (Residual PA V Pres)	Exciter (red)	This alarm indicates that after the transmitter has turned off its RF output, it is unable to discharge the PA volts to a level that is below 10 V. This condition will not allow the transmitter to turn on its RF output; however the condition will be cleared once the PA volts reaches a level that is below 10 V. This condition will typically occur with a failed PA or power supply module. Check for associated alarms and follow the associated troubleshooting procedure.
Controller: RF Spectrum Mask Foldback	Output Network (amber)	This alarm occurs if the HD optimizer has decreased the transmitter's RF output power to ensure the spectrum passes the mask. Typically caused by a degrading load impedance, PA or PS failures.
Controller: SC1 Interlock	Exciter (red)	This alarm occurs, for combined systems only, if the system controller (SC1) has inhibited the transmitter's RF output due to a system interlock fault. See the SC1 Technical Instruction Manual for more information.
Controller: Standby Exciter Test (Standby Exc Test)	Exciter (amber)	This alarm occurs when a standby exciter test has been initiated by the user. Exciter changeovers are inhibited during a standby exciter test.

Device and Alarm Name (AUI, UI)	Controller Front Panel LED (color)	Description and Troubleshooting Action
Controller: SWR Foldback	Output Network (amber)	This alarm occurs if the transmitter's average reflected power exceeds the SWR foldback threshold (200 W for all modes) due to a gradually degrading load match. The forward power of the transmitter will be limited to a level such that this threshold is not exceeded. If the load match improves while the transmitter is producing RF output, the forward power will increase. If the transmitter encounters a 3:1 VSWR (user-configurable) while in SWR foldback mode, an SWR Shutdown alarm occurs. Inspect the antenna and transmission line system for damage or de-tuning.
Controller: SWR Shutback	Output Network (red)	This alarm occurs if the transmitter's reflected power exceeds the SWR shutback threshold (600 W). The transmitter will shut back and attempt to find a safe operating point by entering its SWR foldback mode. This may be the result of a transient SWR condition (arc or lightning) within the output transmission line or antenna system. Attempt to reset the latched condition by pressing Reset [using the AUI's Reset button (see "Resetting Alarms" on page 3.2.108 of the Operations and Maintenance Manual) or using the controller UI (see "Resetting Alarms - Using the Controller UI" on page 3.2.106 of the Operations and Maintenance Manual)]. Inspect the output transmission line and antenna for punctures or damage. If no damage can be found, suspect the output power probe (A15). See also Cutback Active alarm.
Controller: Transmitter PA Biasing	-	This is an informational alarm only that is displayed when the bias routine has been initiated.
Controller: Turn On Delay (Delaying Turn On)	Exciter (red)	This alarm occurs, if the turn-on delay function is enabled, and transmitter is not permitted turn-on until the delay period elapses. The turn-on delay function is enabled upon an ac power failure and is typically used to add delay for use with an external generator.
Controller: Very Low Forward Power (Very Low Fwd Power)	Output Network (amber)	This alarm occurs if transmitter's average forward power is below the low forward power threshold (defaulted to 12.5% of the setpoint and is user adjustable). Check for associated alarms, and follow the associated troubleshooting procedure, if present.
Controller: +1.2V Fail	Power Supply (red)	This alarm occurs if the +1.2 V supply in the controller is 10% higher or 10% lower than its desired value. Check the output voltage of the LVPS module. If necessary, replace the LVPS (see "LVPS / Power Supply Module Replacement" on page 4.1.52). There may also be a problem with the controller's power supply PWB.

Device and Alarm Name (AUI, UI)	Controller Front Panel LED (color)	Description and Troubleshooting Action
Controller: +1.8V Fail	Power Supply (red)	This alarm occurs if the +1.8 V supply in the controller is 10% higher or 10% lower than its desired value. Check the output voltage of the LVPS module. If necessary, replace the LVPS (see "LVPS / Power Supply Module Replacement" on page 4.1.52). There may also be a problem with the controller's power supply PWB.
Controller: +3.3V Fail	Power Supply (red)	This alarm occurs if the +3.3 V supply in the controller is 10% higher or 10% lower than its desired value. Check the output voltage of the LVPS module. If necessary, replace the LVPS (see "LVPS / Power Supply Module Replacement" on page 4.1.52). There may also be a problem with the controller's power supply PWB.
Controller: +12V A Fail	Power Supply (red)	This alarm occurs if the +12 V supply in the controller is 10% lower or 10% higher than the desired value. Check the output voltage of the LVPS module. If necessary, replace the LVPS (see "LVPS / Power Supply Module Replacement" on page 4.1.52). There may also be a problem with the controller's power supply PWB.
Controller: +12V B Fail	Power Supply (red)	This alarm occurs if the secondary +12 V supply in the controller is 10% lower or 10% higher than the desired value. Check the output voltage of the LVPS module. If necessary, replace the LVPS (see "LVPS / Power Supply Module Replacement" on page 4.1.52). There may also be a problem with the controller's power supply PWB.
Controller: +15V Fail	Power Supply (red)	This alarm occurs if the +15 V power supply in the controller is 2 V higher or 2 V lower than the desired value. There may also be a problem with the controller's power supply PWB.
Controller: -15V Fail	Power Supply (red)	This alarm occurs if the -15 V power supply in the controller is 2 V higher or 2 V lower than the desired value. There may also be a problem with the controller's power supply PWB.
Controller: +5V A Fail	Power Supply (red)	This alarm occurs if the +5 V supply in the controller is 10% lower or 10% higher than the desired value. Check the output voltage of the LVPS module. If necessary, replace the LVPS (see "LVPS / Power Supply Module Replacement" on page 4.1.52). There may also be a problem with the controller's power supply PWB.
Controller: +5V B Fail	Power Supply (red)	This alarm occurs if the secondary +5 V supply in the controller is 10% lower or 10% higher than the desired value. Check the output voltage of the LVPS module. If necessary, replace the LVPS (see "LVPS / Power Supply Module Replacement" on page 4.1.52). There may also be a problem with the controller's power supply PWB.

Device and Alarm Name (AUI, UI)	Controller Front Panel LED (color)	Description and Troubleshooting Action
Exciter A/B: AES Digital 1 Audio Low (Dig 1 Aud Low)	Exciter (amber)	This alarm indicates the Digital 1 input level is too low or is not applied. The threshold and timing for this alarm can be adjusted in the Audio Low menu in the user interface (see "Setting User Thresholds" on page 3.2.169) of the Operations & Maintenance Manual.
Exciter A/B: AES Digital 2 Audio Low (Dig 2 Aud Low)	Exciter (amber)	This alarm indicates the Digital 2 input level is too low or is not applied. The threshold and timing for this alarm can be adjusted in the Audio Low menu in the user interface (see "Setting User Thresholds" on page 3.2.169) of the Operations & Maintenance Manual.
Exciter A/B: Analog Left (or Right) Low (Anlg L or R Aud Low)	Exciter (amber)	This alarm indicates the analog left or right audio input level is too low or is not applied. The threshold and timing for this alarm can be adjusted in the Audio Low menu in the user interface (see "Setting User Thresholds" on page 3.2.169) of the Operations & Maintenance Manual.
Exciter A/B: Audio Processor Offline (Audio Proc Offline)	Exciter (amber)	This alarm occurs if the exciter is configured to include an Orban Inside audio processor, but it is not communicating with the processor on the internal serial bus. Check all connections to the Orban Inside audio processor card.
Exciter A/B: Audio Processor Output Fail (Audio Proc O/P Fail)	Exciter (amber)	This alarm occurs if the exciter is configured to include an Orban Inside audio processor, but it is not detecting audio from the processor. Check all connections to the Orban Inside audio processor card.
Exciter A/B: Audio Shutdown	Exciter (red)	This alarm occurs if the exciter's audio processing and FM modulation code is shut down. Should display only during a software upgrade.
Exciter A/B: DSP Audio Reset	Exciter (red)	This alarm indicates that the exciter has detected a misalignment in the audio buffers and has restarted the audio processing in the DSP. If the condition persists or re-occurs, this may indicate a fault with the exciter hardware.
Exciter A/B: Entered Firmware Upgrade (Firmware Upgr)	Exciter (red)	This alarm occurs when the exciter is in "firmware upgrade" mode. It should only be displayed during a transmitter software upgrade.
Exciter A/B: Exgine Misconfigured	Exciter (red)	This alarm occurs when the Exgine is not configured properly for the current operating mode. The alarm may occur briefly during a service mode change, or may persist if the exciter cannot communicate with the Exgine. See the troubleshooting action for the Exgine Offline alarm for more information.
Exciter A/B: Exgine Not Booted	-	This alarm occurs, in FM+HD or HD mode, when the exciter is initially powered up, but the Exgine PWB has not finished its boot-up sequence. Normally, the alarm will clear on its own. If not, suspect a defective Exgine PWB.

Device and Alarm Name (AUI, UI)	Controller Front Panel LED (color)	Description and Troubleshooting Action
Exciter A/B: Exgine Offline	-	This alarm occurs, in FM+HD or HD mode, when the exciter is not communicating with the Exgine PWB. Check the ribbon cable between the Exgine PWB and J11 of the exciter PWB. Check the Exgine PWB.
Exciter A/B: External Mute (Ext Mute)	-	This alarm occurs if the exciter has been muted (0 W) by the transmitter. This is typical when the transmitter is in an 'Rf off' condition, or any other condition that causes the RF drive to be inhibited (external interlock open, etc.). If this alarm persists and there are no other causing conditions present, check the transmitter link cable on the exciter.
Exciter A/B: External Summary Alarm	-	Not displayed in AUI or UI status. Configurable as a remote output. This alarms occurs if there are any external related alarms present. Check for specific external related alarms and troubleshoot accordingly.
Exciter A/B: Fan Fail	Exciter (red)	This alarm occurs if the exciter's cooling fan has been enabled, but the fan tachometer measurement is below 2000 RPM. This alarm limits the exciter RF output power to 10 W; however, if the fan speed recovers to an acceptable level, the exciter RF output power will recover to the correct operating level. Inspect the fan and, if necessary, replace it. In dual exciter systems, a changeover to the standby exciter will occur if the faulty exciter is inhibited due to the fault or its operating power level is limited enough to affect the transmitter RF output power level.
Exciter A/B: Fan Volts Fail	-	This alarm is for information only and should only occur when there is no Exciter Fan Volts present. Inspect the LVPS-A supply and circuitry and, if necessary, replace.
Exciter A/B: FPGA Test Failed (FPGA Fail)	Exciter (red)	This alarm occurs if the FPGA on the main exciter card is not responding. This alarm prevents the exciter from producing modulation or RF power, and may be the result of a failed software upgrade or a hardware failure on the exciter/control PWB.
Exciter A/B: High PA Dissipation (High PA Diss)	Power Amplifier (amber)	This alarm occurs when there is excessive power dissipation (approximately 300 W) in the exciter's power amplifier.
Exciter A/B: High PA Temperature (High PA Temp)	Power Amplifier (red)	This alarm will inhibit the exciter if the heatsink temperature sensed within the exciter's power stage exceeds 85°C (185°F). This alarm will clear when the heatsink temperature decreases to 75°C (167°F). This fault is likely related to an associated fan failure or blockage.
Exciter A/B: High SWR	Exciter (amber)	This alarm occurs if the exciter is experiencing high reflected power (greater than 17.5 W). Check the connection and the RF load at the exciter's output.
Exciter A/B: In Bias Routine (Running Bias Routine)	Power Amplifier (red)	This alarm is for information only and should only occur when the bias routine has been initiated.

Device and Alarm Name (AUI, UI)	Controller Front Panel LED (color)	Description and Troubleshooting Action
Exciter A/B: Invalid HD Data	-	This alarms occurs, in FM+HD or HD mode, if IBOC data is detected from the Exgine PWB, but is not usable (all logic 0s). Digital carriers are muted. Check the IBOC data source.
Exciter A/B: Licensing Error	Exciter (red)	This alarm should only occur if there is a fault with the memory on the exciter. It indicates that the exciter has not been licensed for the current mode of operation.
Exciter A/B: Low Battery	Exciter (amber)	This alarm occurs if the backup battery voltage falls below 2.7 V. The GV5/GV3.5 takes no action on this alarm. Use a digital multimeter to check the battery voltage (with ac power on). If the battery voltage is low, replace the battery. If the battery voltage is OK, cycle ac power (off, then on). If the alarm does not clear, suspect the exciter/control PWB.
Exciter A/B: Missing Preset	Exciter (red)	Visible only when replacing an exciter. This alarm occurs when there are no presets programmed into the exciter. The transmitter should automatically correct this.
Exciter A/B: Modulation Loss (Mod Loss)	Exciter (red)	This alarm, enabled by the user, indicates that the exciter's audio modulation level is below the level specified in the audio loss settings of the active preset (see "Mod Loss" on page 3.2.103 of the Operations & Maintenance Manual to enable/disable this alarm and to configure the resulting action). Depending on the setting, this alarm could trigger a preset change, inhibit the RF or have no effect (alarm only). Check the appropriate program input(s) and the mod loss setting for the preset.
Exciter A/B: MPX Audio Low (MPX Aud Low)	Exciter (amber)	This alarm indicates the MPX input level is too low or is not applied. The threshold and timing for this alarm can be adjusted in the Audio Low menu in the user interface (see "Setting User Thresholds" on page 3.2.169) of the Operations & Maintenance Manual.
Exciter A/B: No Active 10MHz (No Act 10MHz)	Exciter (red)	This alarms occurs if there is a fault with the current 10 MHz source being used to clock the exciter. Check the external 10 MHz source or suspect the oscillator on the exciter.
Exciter A/B: No Exgine 10 MHz	-	This alarms occurs, in FM+HD or HD mode, if no 10 MHz clock is being detected from the Exgine PWB. Check the cable between the Exgine PWB and J13 of the exciter PWB. Check that the Exgine PWB is powered up.
Exciter A/B: No External 10MHz (No Ext 10MHz)	Exciter (red)	This alarms occurs if there is a fault with the external 10 MHz source being used to clock the exciter. Check the external 10 MHz source.
Exciter A/B: No HD Data Link (No HD Data)	-	This alarms occurs, in FM+HD or HD mode, if IBOC data is not detected from the Exgine PWB. Digital carriers are muted. Verify the RJ45 cable between the Exgine PWB and J11 of the exciter PWB is seated properly. Check that the Exgine PWB is correctly powered up.

Device and Alarm Name (AUI, UI)	Controller Front Panel LED (color)	Description and Troubleshooting Action
Exciter A/B: No Reverse Path (No Rev Path)	-	This alarm indicates the RF sample from the transmitter output is below a preset threshold. The pre-correction function will not operate.
Exciter A/B: No Transmitter Communication (No Xmtr Comms)	Exciter (red)	This alarm occurs if the exciter is not detecting communication over the serial bus from the transmitter controller. This alarm is typically only visible in the Events Log, since it will not be transmitted when communication is interrupted.
Exciter A/B: No 1PPS	Exciter (amber)	This alarm occurs if the pilot output locking to 1 PPS is enabled and the 1 PPS signal is not present.
Exciter A/B: On Audio Backup	Exciter (red)	This alarm occurs if the main audio source has been lost, and the exciter has switched to the backup source as configured by the user.
Exciter A/B: PA1(or 2) High Dissipation (PA 1(or 2) High Diss)	Power Amplifier (amber)	This alarm occurs when there is excessive power dissipation (approximately 300 W) in the exciter's power amplifier.
Exciter A/B: PA Voltage Fail (PA Volts Fail)	Power Supply (red)	This alarm occurs if the power supply voltage for the exciter PA is below 20 V. Check for a blown fuse inside the exciter. Check LVPS module's output voltage.
Exciter A/B: Pilot Unsync	Exciter (amber)	This alarm occurs if the pilot output locking to 1 PPS is enabled, but the exciter has not yet locked onto the incoming signal (if present). It may indicate that the GPS receiver is not detecting a signal. Check the GPS receiver and antenna.
Exciter A/B: PLL Unlock	Exciter (red)	This alarm occurs when the internal PLL of the exciter in unable to lock to the selected 10 MHz reference. Possible causes are an out-of-range 10 MHz input or a hardware failure on the exciter/control PWB (A1).
Exciter A/B: Power Supply Summary Alarm	-	Not displayed in AUI or UI status. Configurable as a remote output. This alarm occurs if there are any alarms present that are related to the power supplies. Check for associated alarms, and follow the associated troubleshooting procedure, if present.
Exciter A/B: Preamp Voltage Fail (Preamp V Fail)	Power Supply (red)	This alarm occurs if the power supply voltage for the pre-amplifier is below 20 V. Check for a blown fuse inside the exciter. Check LVPS module's output voltage.
Exciter A/B: Rebooted Exciter (Rebooted Exc)	Exciter (red)	This is an informational alarm only that is displayed when the watchdog timer reboots the exciter's main microcontroller (DSP) or after an ac power interruption.

Device and Alarm Name (AUI, UI)	Controller Front Panel LED (color)	Description and Troubleshooting Action
Exciter A/B: Reboot For Settings Needed (Need Reboot)	Exciter (red)	This alarm indicates that exciter setup changes have been made, typically via the AUI. Typically, the DSP will reboot itself automatically. If the alarm persists for more than five minutes, cycle the ac power (turn off, then on) to store the changes.
Exciter A/B: Reduced IBOC Injection	Exciter (red)	This alarm occurs if the HD optimizer has decreased the transmitter's HD injection level to ensure the output spectrum passes the mask. Typically caused by a degrading output load impedance or PA or PS failures.
Exciter A/B: SCA 1 (or 2) Audio Low (SCA 1 or 2 Aud Low)	Exciter (amber)	This alarm indicates the SCA 1 or 2 input level is too low or is not applied. The threshold and timing for this alarm can be adjusted in the Audio Low menu in the user interface (see "Setting User Thresholds" on page 3.2.169) of the Operations & Maintenance Manual.
Exciter A/B: SRC1 (or SRC2) Unlock	Exciter (amber)	This alarm indicates that no valid AES/EBU stream data is being detected on the selected AES/EBU input. Check audio input cables. The GV5/GV3.5 takes no action on this alarm.
Exciter A/B: Summary Alarm	-	Not displayed in AUI or UI status. Configurable as a remote output. This alarms occurs if there are any alarms present. Check for specific alarms and troubleshoot accordingly.
Exciter A/B: SWR Foldback	Exciter (amber)	This alarm occurs if the exciter reduces its output power due to a high SWR. The exciter will attempt to maintain a maximum reflected power level of 25 W at all times. Check the connection and the RF load at the exciter's output.
Exciter A/B: SWR Shutback	Exciter (red)	This alarm occurs if there is a sudden increase in the reflected power sensed by the exciter due to an external condition (e.g., open or shorted RF drive cable). The exciter's RF output is reduced to 0 W. The threshold for this alarm is typically set to 75 W. Check the connection and the RF load at the exciter's output.
Exciter A/B: Temperature Summary Alarm	-	Not displayed in AUI or UI status. Configurable as a remote output. This alarms occurs if there are high temperature related alarms occurring. Check for specific temperature related alarms and troubleshoot accordingly.
Exciter A/B: Unsigned DSP Image (Bad DSP Image)	Exciter (red)	This alarm indicates that the exciter is operating with 'unsigned code', but is otherwise operational. This alarm may only be displayed if the transmitter is operating with a 'beta' version of factory software.
Exciter A/B: Unsigned FPGA Image (Bad FPGA Image)	Exciter (red)	This alarm indicates that the exciter is operating with 'unsigned code', but is otherwise operational. This alarm may only be displayed if the transmitter is operating with a 'beta' version of factory software.

Device and Alarm Name (AUI, UI)	Controller Front Panel LED (color)	Description and Troubleshooting Action
Exciter A/B: Unsupported Audio Configuration	Exciter (red)	This alarm indicates that the user has selected a preset configuration for the audio processing in the exciter that cannot be implemented. This may be due to attempting to use the same physical input for multiple purposes, or because two incompatible modes have been selected.
Exciter A/B: +15V Fail, -15V Fail	Power Supply (red)	This alarm occurs if the +15 V or -15 V power supply in the controller is 2 V higher or 2 V lower than the desired value.
Exciter A/B: +5V A or B Fail, +3.3V Fail, +1.8V Fail, +1.2V Fail	Power Supply (red)	This alarm occurs if the associated power supply in the exciter is 10% higher or 10% lower than the desired value.
Module #: Fan 1-6 Fail	Power Amplifier (amber)	This alarm occurs if the module fans have been enabled, but the fan tachometer measurement is below 2200 RPM. Inspect the affected fan and, if necessary, replace it (see "Module Cooling Fan Replacement" on page 4.1.51).
Module #: Fan Fail Shutdown	Power Amplifier (red)	This alarm occurs when more than one of the module's six fans have failed. The module will shut down. Failed fans must be repaired or replaced before the module can operate. Check for associated Fan 1-6 Fail alarms and troubleshoot accordingly.
Module #: Fan Volts Fail (Fan V Fail)	Power Supply (red)	This alarm occurs if the associated module's cooling fan supply voltage is 10% high or 10% low. This may be the result of a circuit fault on the module control/interface PWB.
Module #: High Reject Power (High Rej)	Power Amplifier (red)	This alarm occurs if the associated module's reject load power exceeds 400 W. This may be the result of PA failures. Check for associated alarms and troubleshoot accordingly. This alarm may be accompanied by a Reject Foldback alarm, which means the transmitter power will be reduced to protect the reject load.
Module #: High RF Drive Power (RF Drv High)	Power Amplifier (red)	This alarm is indication only and occurs if the input RF drive (exciter power) is greater than 45 W. Check the exciter power setpoint to make sure it is correct for the transmitter.
Module #: High Temperature (High Temp)	Power Amplifier (red)	This alarm occurs if the associated module's heatsink temperature exceeds 85°C (185°F). This alarm is most likely caused by excessive ambient temperature, a module fan failure or blockage, or excessive power amplifier dissipation. This alarm will clear when the module's heatsink temperature decreases to 75°C (167°F).
Module #: Low RF Drive Power (RF Drv Low)	-	This alarm occurs if the input RF drive (exciter power) is less than 10 W and the transmitter has not intentionally reduced it to that level. This may be the result of an exciter fault, excessive load variation on the active exciter output, or defective components on the RF drive splitter/changeover assembly.

Device and Alarm Name (AUI, UI)	Controller Front Panel LED (color)	Description and Troubleshooting Action
Module #: Missing	Power Amplifier (red)	This alarm occurs if the RF power module is removed. If the associated RF power module is present, and the alarm still occurs, try reseating the RF power module. If the alarm persists, suspect a fault with circuitry on the module control/interface PWB (A3). See also Rack #: Module Extraction Shutback alarm.
Module #: No PAs Operational (No PAs Op)	Power Amplifier (red)	This alarm occurs when all of the power amplifiers in the associated module are inactive due to external conditions such as ac power loss, removal of power supplies, or faults in the power supplies or power amplifiers. Check for associated alarms and troubleshoot accordingly.
Module #: PA Current Imbalance (PA Curr Imb)	Output Network (amber) Power Amplifier (red)	This alarm occurs when the maximum PA current on one side of the power module combiner exceeds 3.5 times the maximum PA current on the other side of the combiner. This will latch off the module, since it indicates a possible fault in the module combiner, transmitter combiner or output network. If more than one module has this alarm, the transmitter will shut down with a Combiner Match alarm.
Module #: PA Volts A (or B) Fail [PA V A (or B) Fail]	Power Supply (red)	This alarm indicates the PA voltage from the power supply does not match the requested setpoint. This is likely caused by a power supply failure. Check the associated power supply module (A or B).
Module #: PA 1-4 Fail	Power Amplifier (red)	This alarm occurs if (1) the PA voltage for the suspect PA is greater than 16 V; (2) the RF drive level to the suspect RF power module (with failed PA) is greater than 10 W; and (3) if conditions (1) and (2) are met, the dc input current for the suspect PA has fallen below a preset threshold (typically less than 50% of the average PA current of the operational PAs). This may be caused by a cabling fault on the PA, loss of PA voltage, bias voltage or RF drive, or a defective FET. The transmitter's output power may be reduced, depending on the power setpoint. The alarm can also occur after initiating a Xmtr PA Bias routine, which is required after replacing an RF power module or the controller module. In this case the alarm indicates that the bias routine failed for the specified PA, possibly as a result of a PA bias circuit failure or an actual PA failure. Attempt to operate the PA in the desired mode. If the fault clears, the alarm was likely caused by a PA bias circuit fault. If the fault remains and/or the PA current levels are below average, it is likely a PA failure.
Module #: PS A (or B) AC Fail	Power Supply (red)	This alarm occurs if one of the two module power supplies (1 or 2) is reporting an ac failure, indicating its ac input voltage is less than 175 V ac. If a bank of power supply modules are indicating an AC Fail alarm, it is possible that an ac phase loss has occurred. Check the ac voltage applied to the suspect power supply module. If the ac voltage is acceptable, replace the module (see "LVPS / Power Supply Module Replacement" on page 4.1.52).

Device and Alarm Name (AUI, UI)	Controller Front Panel LED (color)	Description and Troubleshooting Action
Module #: PS A (or B) Current Limit	Power Supply (red)	This alarm occurs if one of the two module power supplies (1 or 2) is reporting a current limit, indicating that the power being delivered by the module has reached 2750 W. This may relate to the operating mode and/or the load impedance at the transmitter's RF output. Check for other transmitter related alarms.
Module #: PS A (or B) Fail	Power Supply (red)	This alarm occurs if one of the two module power supplies (1 or 2) is reporting a PS failure, indicating its output voltage is outside its acceptable range, based on the control setting. Check the dc voltage output of the suspect power supply module. If the dc voltage is out of tolerance, replace the power supply module (see "LVPS / Power Supply Module Replacement" on page 4.1.52). If the voltage is acceptable, suspect the PS interface PWB (A1).
Module #: PS A (or B) High Temperature [PS A (or B) Temp]	Power Supply (red)	This alarm occurs if one of the two module power supplies (1 or 2) is reporting a high temperature alarm, indicating its operating temperature has exceeded its internal threshold of 105°C (221°F). Both module power supplies are inhibited while this fault exists. This alarm is most likely caused by a module fan failure or blockage. Verify the module turns on and its fan is operational. If the fan is not operational, inspect it for possible blockage. If necessary, replace the power supply module (see "LVPS / Power Supply Module Replacement" on page 4.1.52). If the alarm persist after replacing the module, suspect the PS interface PWB (A1).
Module #: PS A (or B) Low Line	Power Supply (red)	This alarm occurs if one of the two module power supplies (1 or 2) is reporting a low ac input voltage (less than 175 V ac, higher than 90 V ac). The power supply will limit its associated module's output.
Module #: PS A (or B) Missing	Power Supply (red)	This alarm occurs if the module power supply (A or B) is removed, or has not been detected on the serial bus. Install an operational power supply module. The alarm may persist for several seconds after replacing a power supply module, before the power supply module is recognized. If the alarm persists after one minute, try reseating the power supply module. This alarm may also be caused by an ac power loss to the power supply module.
Module #: Reject Power Shutback (Rej Shutback)	Output Network (amber)	This alarm occurs when the reject power in the power module's combiner suddenly exceeds 600 W, requiring a shutback. This may be the result of a PA failure or, under certain conditions, may indicate a fault in the transmitter's RF combiner/filter. The module will be latched off until a reset is initiated.
Module #: RF Drive Loss (RF Drv Loss)	Power Amplifier (red)	This alarm occurs if the input RF drive (exciter power) is less than 1 W when it is expected to be 2 W or higher, based on the measurements from the remaining power modules. Check the RF drive cable between the splitter and the module control/interface PWB (A3).

Device and Alarm Name (AUI, UI)	Controller Front Panel LED (color)	Description and Troubleshooting Action
Module #: Switch Inhibit (Switch Inh)	Power Amplifier (red)	This alarm occurs if the module's front panel switch is in the 'DISABLE (down)' position. Set the switch to its 'ENABLE (up)' position to enable the module.
Rack #: AC Phase Loss A/B/C	Power Supply (red)	This alarm occurs if several power supply modules report a PS AC Fail alarm, indicating that one of the phases of the main ac power source may have been lost. Check the three amber LEDs in the bottom, rear of the transmitter. If the LEDs are off, there is likely a problem with the ac service. Measure the ac source voltage at the service entrance. Normally this should measure between 175 and 265 V ac line-line [for 3-phase (nominal 208 V ac) and 1-phase (nominal 240 V ac)] or between 303 and 459 V ac line-line [for 3-phase (nominal 400 V ac)]. While this alarm is active, the transmitter's ALC function will not allow an increase in output power.
Rack #: Communication Fail (Comm Fail)	-	This alarm occurs if communication with the controller has been interrupted. This alarm is typically only visible in the Events Log, since it will not be transmitted when communication is interrupted. Check cable connections between the associated module interface PWB and the controller.
Rack #: Discharging PA Volts (Discharging PA V)	PS (red)	This alarm occurs when the transmitter has initiated a shutback sequence, and residual PA voltage energy stored in the capacitors in the power supplies and PAs is being discharged. During a shutback sequence, the RF drive to the PAs is turned off immediately after the event, and this occurs faster than the power supply modules can be inhibited. Therefore, PA voltage is still being applied to the capacitors with no drive to discharge the energy. To discharge the stored energy from the capacitors, the PA bias is increased to a discharge level after the power supplies have been inhibited. This causes the stored energy to be dissipated through dc current in the FET. This alarm should only occur with a Residual PA Volts Present alarm. See Residual PA Volts Present alarm for more information.
Rack #: EEPROM Fail	-	This alarm occurs if the rack is unable to load its configuration from EEPROM. This is a non-critical fault, since all of the information is retrievable from the power supply modules and the controller.
Rack #: High Ambient Temperature (High Amb Temp)	-	This alarm is indication only and occurs if the transmitter's ambient temperature exceeds 60°C (140°F). Check the intake air filters or cooling system.
Rack #: LVPS A (or B) Fail	Power Supply (red)	This alarm occurs if LVPS module A (U2) or B (U3) is reporting a PS failure, indicating its output voltage is outside its acceptable range, based on the control setting. Check the dc output voltage of the suspect LVPS. If the dc voltage is out of tolerance, replace the LVPS module (see "LVPS / Power Supply Module Replacement" on page 4.1.52). If the dc voltage is acceptable, suspect the PS interface PWB (A1).

Device and Alarm Name (AUI, UI)	Controller Front Panel LED (color)	Description and Troubleshooting Action
Rack #: LVPS A (or B) AC Fail	Power Supply (red)	This alarm occurs if LVPS module A (U2) or B (U3) is reporting an ac failure, indicating its ac input voltage is less than 175 V ac. Check the ac voltage applied to the suspect LVPS module. If the ac voltage is acceptable, replace the LVPS module (see "LVPS / Power Supply Module Replacement" on page 4.1.52).
Rack #: LVPS A (or B) High Temperature [LVPS A (or B) Temp]	Power Supply (red)	This alarm occurs if LVPS module A (U2) or B (U3) is reporting a high temperature alarm, indicating its operating temperature has exceeded its internal threshold of 105°C (221°F). This alarm is most likely caused by a module fan failure or blockage. Allow the module to cool and attempt to reset the alarm. Verify the module turns on and its fan is operational. If the fan is not operational, inspect it for possible blockage. If necessary, replace the LVPS module (see "LVPS / Power Supply Module Replacement" on page 4.1.52).
Rack #: LVPS A (or B) Low Line	Power Supply (red)	This alarm occurs if LVPS A (U2) or B (U3) is reporting a low ac input voltage (less than 175 V ac, higher than 90 V ac). The power supply will limit its associated module's output.
Rack #: LVPS A (or B) Missing	Power Supply (amber)	This alarm occurs if LVPS module A (U2) or B (U3) has been removed. Install an operational LVPS module. The alarm may persist for several seconds after replacing an LVPS module, before the LVPS module is recognized. If the alarm persists after one minute, try reseating the LVPS module. This alarm may also be caused by an ac power loss to the LVPS module. This alarm only occurs if the system is configured to use LVPS A or B, as applicable (see "LVPS Hardware" on page 3.2.130) of the Operations & Maintenance Manual.
Rack #: Module Extraction Shutback	Power Amplifier (red)	This alarm occurs if the RF power module is removed without first being inhibited via its front panel switch. Try reseating the RF power module. If the alarm persists, suspect a fault with circuitry on the associated module control/interface PWB.
Rack #: Reject Fan Volts Fail (Rej Fan V Fail)	Power Supply (red)	This alarm occurs if the fan voltage for the module is 10% high or 10% low from the expected value. This may be the result of a fault with the associated circuit on the module control/interface PWB (A3).
Rack #: Residual PA Volts (Residual PA V)	Exciter (red)	This alarm indicates that after the transmitter has turned off its RF output, it is unable to discharge the PA volts to a level that is below 10 V. This condition will not allow the transmitter to turn on its RF output; however the condition will be cleared once the PA volts reaches a level that is below 10 V. If the condition cannot be cleared automatically, the transmitter will still be allowed to turn on. This condition will typically occur with a failed PA or power supply module. Check for associated alarms and follow the associated troubleshooting procedure.

Device and Alarm Name (AUI, UI)	Controller Front Panel LED (color)	Description and Troubleshooting Action
Rack #: +15V Fail	Power Supply (red)	This alarm occurs if the +15 V supply on the module control/interface PWB (A3) is outside its acceptable voltage range (between +13.5 and +16.5 V).
Rack #: +3.3V Fail	Power Supply (red)	This alarm occurs if the +3.3 V supply on the module control/interface PWB (A3) is outside its acceptable voltage range (between +3.0 and +3.6 V).
Rack #: +5V Fail	Power Supply (red)	This alarm occurs if the +5 V supply on the module control/interface PWB (A3) is outside its acceptable voltage range (between +4.5 and +5.5 V).

Accessing the Inside of the Transmitter

The front of the GV5/GV3.5 has a hinged door that provides access to the remote interface PWB (A16), RF power modules 1 and 2 (A8 and A9), LVPS modules A (U2) and B (U3), power supply modules (U4 through U7), controller module (A4) and exciters A (A5) and B (A6, if purchased).

The rear of the GV5/GV3.5 has removable access panels (see Figure 4.1.5). Removing the upper panel provides access to the rear panel of the controller (A4), exciters A (A5) and B (A6, if purchased), reject load (A13), fan tray (A14) and various other PWBs and assemblies. Removing the lower panel provides access to the ac input terminal block (TB1) and the power supply interface PWB (A1).

Figure 4.1.5: Rear Access Panels

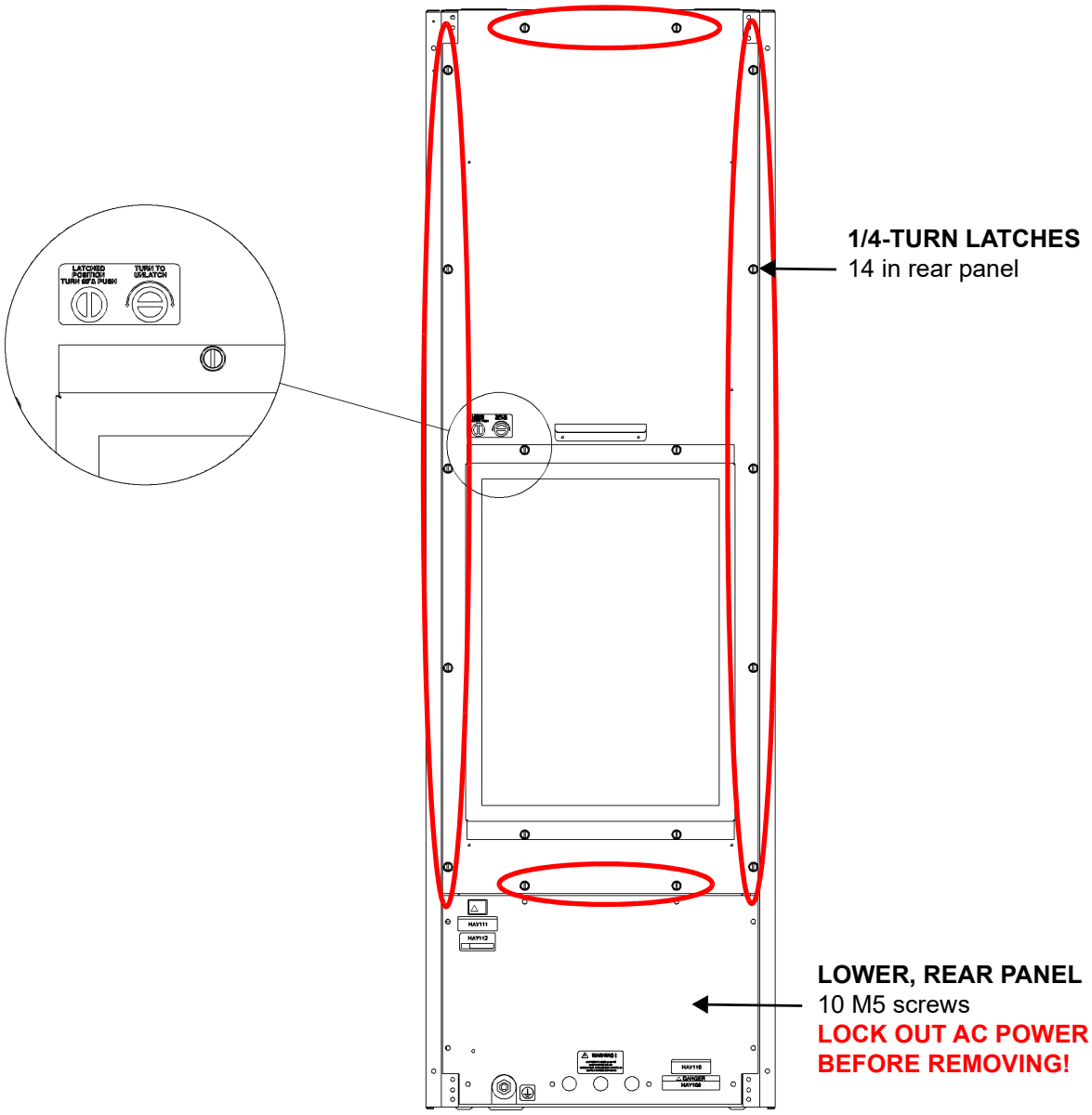

Troubleshooting Tips

- AUI Screen Lockup
- RF Power Module Faults
- Power Supply Module and LVPS Faults - see page 4.1.38
- Troubleshooting NTP Issues - see page 4.1.43

AUI Screen Lockup

If the local AUI screen locks up, perform the following steps to restore normal AUI operation:

1. If you also use a PC for remote AUI control/monitoring of the transmitter, use the PC to navigate to the System Settings page (from the Menu options). Select Reset and click the Reboot AUI button. If the local AUI is non-responsive (locked up) or this does not restore operation of the AUI, proceed to Step 2.

2. Open the front door and use the controller's UI to navigate to the System Settings -> SBC Reset screen. Select Force SBC Reset and press accept to save the changes (see the GV5/GV3.5 Operations & Maintenance Manual). If this does not restore operation of the AUI, proceed to Step 3

3. Remove the rear panel to gain access to the rear of the controller module (A4). From the rear panel, use a suitable tool to activate the SBC RESET button (next to the CONSOLE A2J8 D-sub connector, see Figure 4.1.6) via the rear panel clearance hole.

Figure 4.1.6: SBC Reset Button (partial rear view of controller A4)

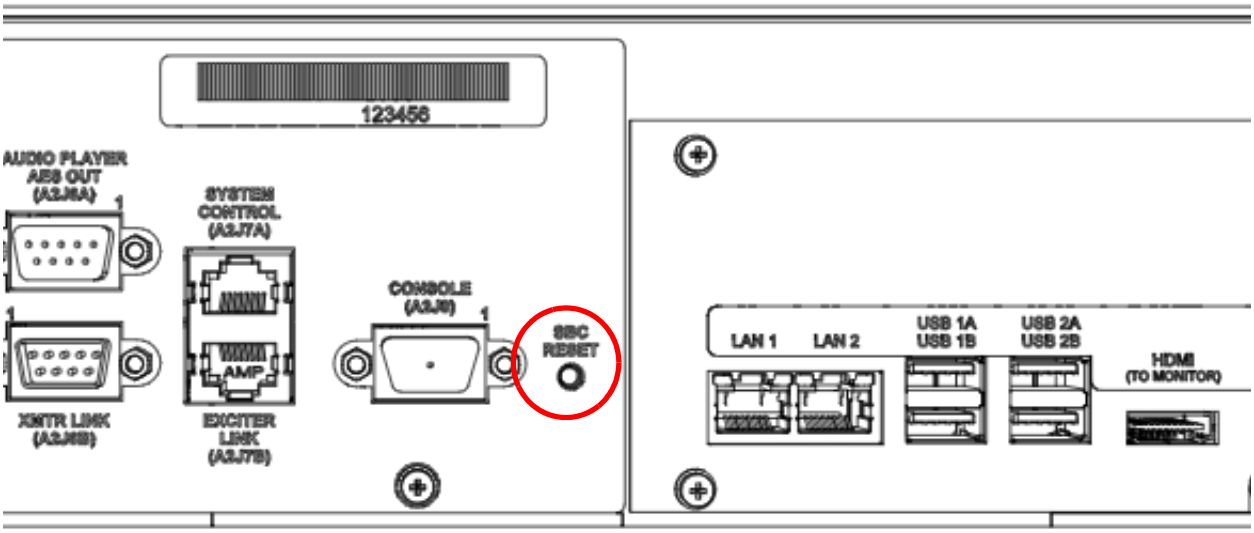

RF Power Module Faults

There are many alarms on the AUI (local or remote) or controller UI, prefixed by the text RF Module, that indicate faults related to one or more of the RF power modules. The number that appears after RF Module (1-2) identifies the position of the affected module. Numbers correspond to modules in a left to right, top to bottom sequence, as viewed from the front of the transmitter.

1. Check the forward power reading on the UI or AUI. If it is less than the preset level, one or more RF power modules are defective. Proceed to "RF Power Module Fault Validation" on page 4.1.36.

2. If the forward power reading in Step 1 is normal, go to the controller UI's Alarms screen or select the AUI's (local or remote) Status button on the remote AUI to check for other alarms that may have triggered the RF power module alarm.

3. From the remote AUI's Meter List View page (see Figure 4.1.7), click the **i** (information) button next to the RF Modules # folder in the Transmitter Layout section to view the status screen for all modules or click the right-hand arrow to expand the RF Modules folder to allow clicking on the **i** button for an individual RF Module (e.g., RF Module 1, see Figure 4.1.8 on page 4.1.35). This screen displays critical parameters for both RF power modules. As an aid in troubleshooting, compare parameters to isolate possible module faults.

Figure 4.1.7: AUI - Meter List View page

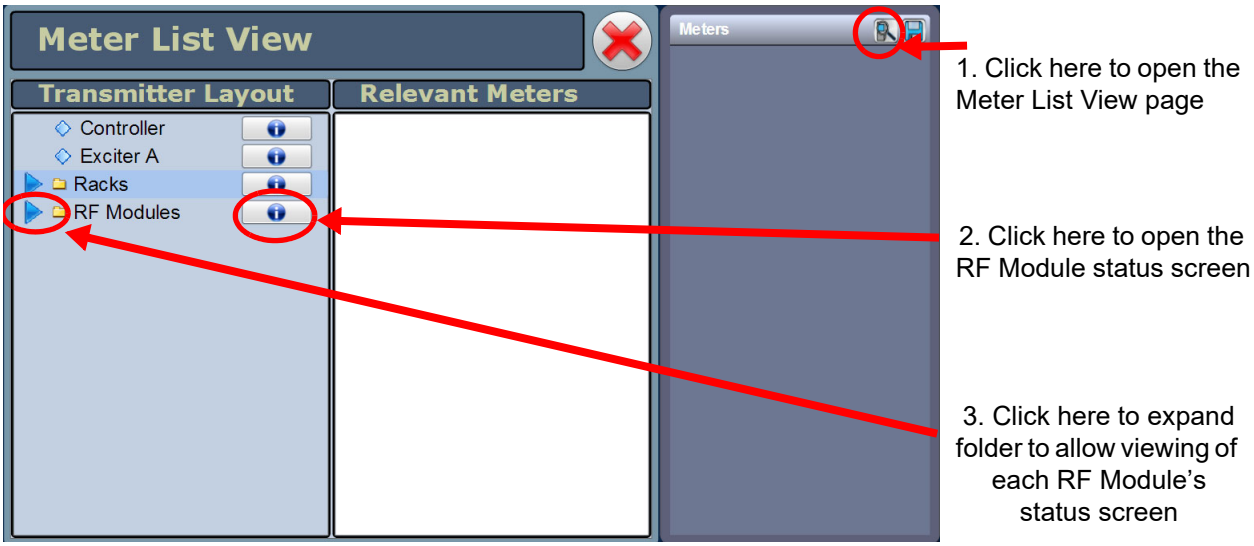

Figure 4.1.8: RF Module Status Screen

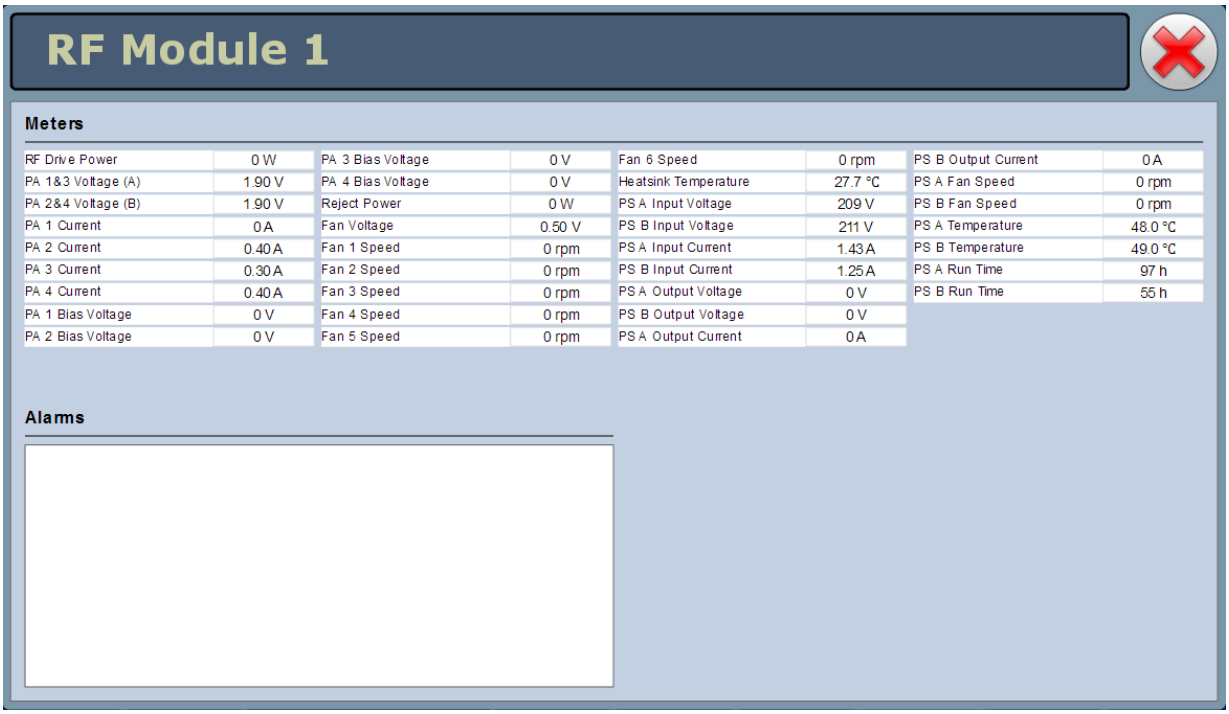

RF Module 1

Meters

RF Drive Power	0 W	PA 3 Bias Voltage	0 V	Fan 6 Speed	0 rpm	PS B Output Current	0 A
PA 1&3 Voltage (A)	1.90 V	PA 4 Bias Voltage	0 V	Heatsink Temperature	27.7 °C	PS A Fan Speed	0 rpm
PA 2&4 Voltage (B)	1.90 V	Reject Power	0 W	PS A Input Voltage	209 V	PS B Fan Speed	0 rpm
PA 1 Current	0 A	Fan Voltage	0.50 V	PS B Input Voltage	211 V	PS A Temperature	48.0 °C
PA 2 Current	0.40 A	Fan 1 Speed	0 rpm	PS A Input Current	1.43 A	PS B Temperature	49.0 °C
PA 3 Current	0.30 A	Fan 2 Speed	0 rpm	PS B Input Current	1.25 A	PS A Run Time	97 h
PA 4 Current	0.40 A	Fan 3 Speed	0 rpm	PS A Output Voltage	0 V	PS B Run Time	55 h
PA 1 Bias Voltage	0 V	Fan 4 Speed	0 rpm	PS B Output Voltage	0 V		
PA 2 Bias Voltage	0 V	Fan 5 Speed	0 rpm	PS A Output Current	0 A		

Alarms

RF Power Module Fault Validation

Each RF power module has a multi-colour LED on its front panel, which can help in identifying a fault and allowing you to determine whether remedial action is required now or later.

Identify and isolate a defective RF power module, and verify the nature of the defect by checking the LED on the RF power module's front panel. Note which RF power module is not operating normally and producing RF power (i.e., LED is not solid green). Record which RF power modules are displaying an alarm and the state of its LED (see below).

- Green (solid): Module is operational
- Green/Amber (blinking): Module is operational, but has a non-critical fault.
- Green/Red (blinking): Module is operational, but has a critical fault.
- Amber (solid): Module is in a controlled inhibit state, but ready for operation (i.e., RF off).
- Amber/Red (blinking): Module is inhibited by a latching fault.
- Red (solid): Module is inhibited by a fault.

Attempt to reset an RF power module, by initiating a Reset on the AUI or controller UI. If you cannot reset the front panel LED alarm, see "RF Power Module Troubleshooting" on page 4.1.36.

RF Power Module Troubleshooting

Refer to "Operating with Defective or Missing RF Power Modules" on page 4.1.36 for removal and installation instructions and then refer to "Troubleshooting RF Power Modules" on page 4.1.48 for detailed troubleshooting information.

NOTE: A defective RF power module can be removed for repair, without turning off the transmitter, as described in "Removing an RF Power Module" on page 4.1.46. The transmitter can be operated at a reduced output power level with an RF power module removed.

Operating with Defective or Missing RF Power Modules

It is permissible to operate the transmitter with multiple defective or missing RF power module(s). Table 4.1.2 on page 4.1.37 shows the approximate percentage of remaining output power (relative to original) when RF power modules, power amplifiers (PAs), or power supply modules fail or are removed.

> **CAUTION!** Do not attempt to compensate for power reduction caused by an RF power module failure by adjusting the RF power level.

- If an RF power module has one or more defective PAs, as indicated by the AUI's Module Status screen (and suspect RF power module's front panel LEDs), but is still contributing to the transmitter's RF output, it may be left on. The transmitter will take necessary precautions to reduce the stress on components due to the failure, i.e., power reduction.

- If an RF power module must be removed, turn it off prior to disengaging its blind-mating connectors. Refer to "RF Power Module Replacement" on page 4.1.46 to disable a module with the transmitter on air. At all other times, turn off the switching power supplies by pressing the RF Off button, then switch off the ac power source at the service entrance.

NOTE: There are many possible combinations of PA/module failures or extractions. The best and worst case situations are shown in Table 4.1.2 on page 4.1.37.

- When maintenance is complete and it is safe to return the transmitter to normal service, enable all RF power module supplies by setting the switch on the front of the associated RF power module(s) to its 'ENABLE (up)' position.

Table 4.1.2: Output Power Level vs. PA/Module Failure/Removal

PA/Module Failures/Removal	RF Output Power (% of original RF output power)	
	Best Case	Worst Case
1 RF Power Module	25	25
2 RF Power Modules	0.0	0.0
1 RF Power Amplifier	77	77
2 RF Power Amplifiers	56	38
3 RF Power Amplifiers	39	26
4 RF Power Amplifiers	25	17
5 RF Power Amplifiers	14	9
6 RF Power Amplifiers	6	4
1 Power Supply Module	56	56
2 Power Supply Modules	25	25

Power Supply Module and LVPS Faults

There are various power supply module and LVPS module related alarms on the AUI (local or remote) or controller UI.

Power supply module alarms are prefixed by the text RF Module and then PS. The number that appears after RF Module (1-2) identifies the position of the affected module. The letter that appears after PS (A or B) identifies the affected power supply module. There are two power supply modules for each RF power module.

Low voltage power supply (LVPS) alarms are prefixed by the text LVPS. The letter that appears after LVPS (A, B,) identifies the affected LVPS module.

1. Check the front panel LEDs of the power supply modules and LVPS modules. Normally, only the AC OK and DC OK LEDs should be on (solid green). If not, the associated power supply module or LVPS module may be defective. Proceed to "Power Supply or LVPS Module Fault Validation" on page 4.1.41.

2. From the AUI's (local or remote) Meter List View page (see Figure 4.1.9 on page 4.1.39):
   - select the **i** (information) button next to the RF Modules # folder in the Transmitter Layout section to view the status screen for all modules or select the right-hand arrow to expand the RF Modules folder to allow clicking on the **i** button for an individual RF Module (e.g., RF Module 1, see Figure 4.1.10 on page 4.1.39). This screen displays critical parameters for the power supply modules. As an aid in troubleshooting, compare parameters to isolate possible faults.
   - select the **i** (information) button next to the Rack # folder in the Transmitter Layout section and then to view the Rack status screen (see Figure 4.1.11 on page 4.1.40). This screen displays LVPS meters.

Figure 4.1.9: AUI - Meter List View page

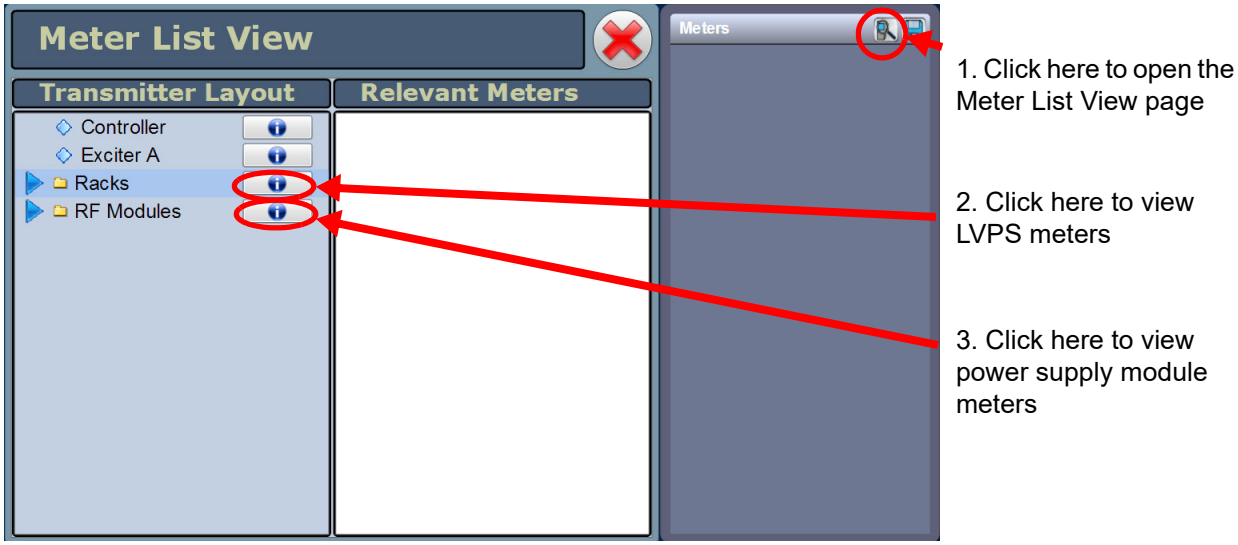

Figure 4.1.10: Module Status - Power Supply Meters

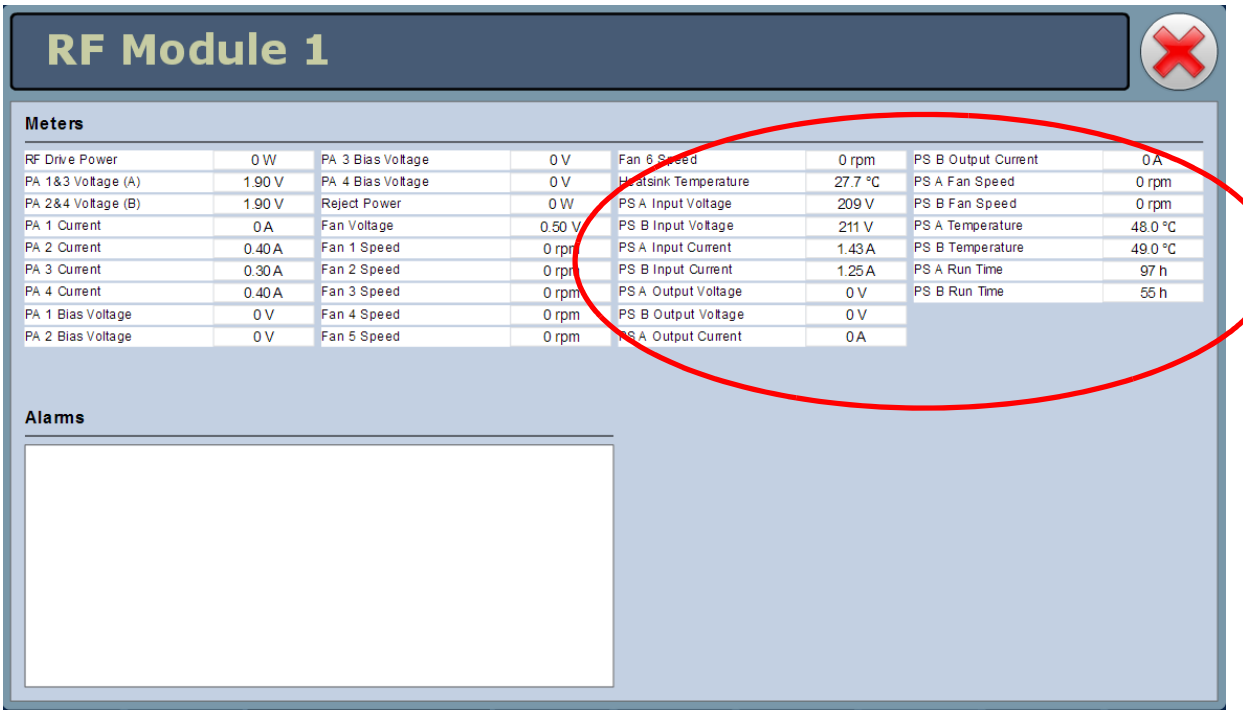

Figure 4.1.11: Rack Status - LVPS meters

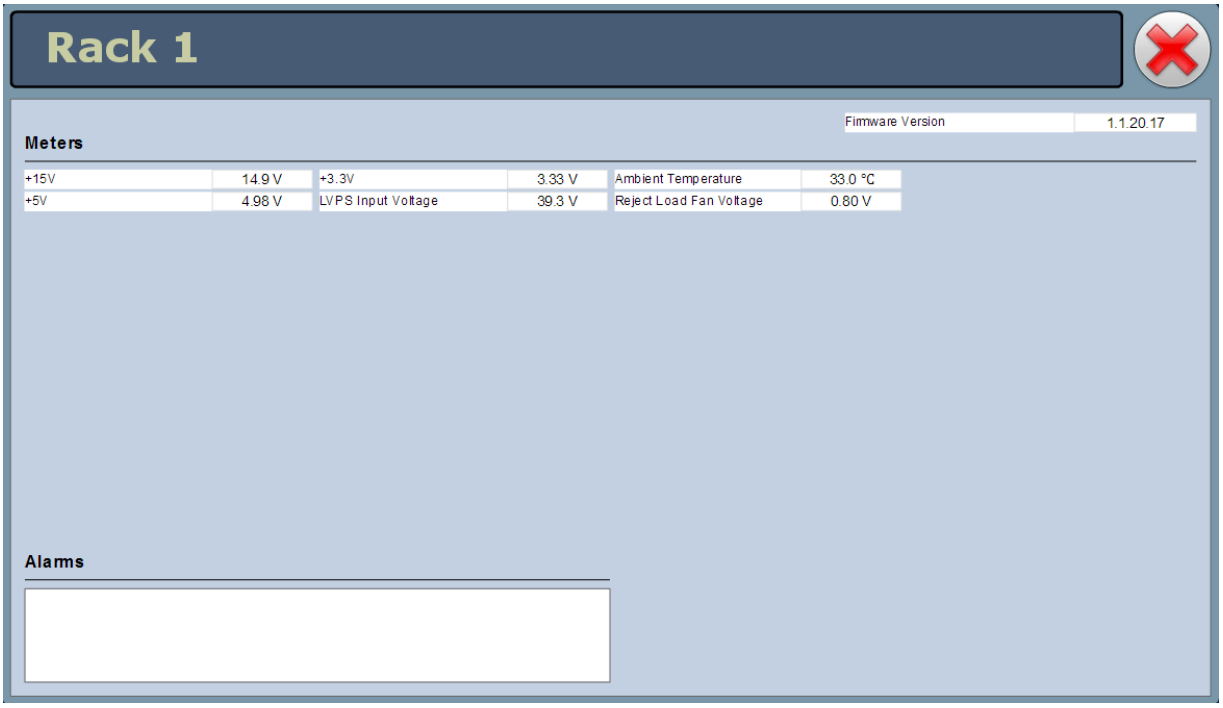

Power Supply or LVPS Module Fault Validation

Each power supply and LVPS module has four LEDs on its front panel (see Figure 4.1.12, which can help in identifying a fault and allowing you to determine whether remedial action is required now or later.

Figure 4.1.12: Power Supply Module LEDs

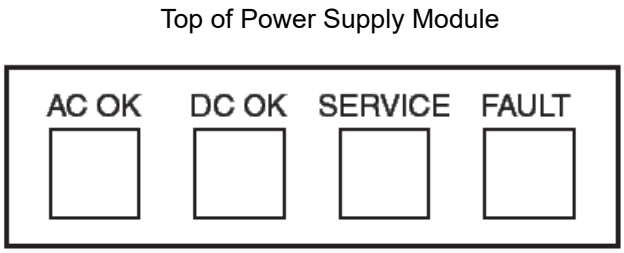

Record which power supply modules are displaying an alarm and the state of its LEDs (see below).

- AC OK LED
  - Green (solid): Ac voltage is present and within acceptable limits.
  - Green (blinking): Ac voltage is present, but outside acceptable limits.
- DC OK LED
  - Green (solid): Power supply is enabled and output regulated.
  - Green (blinking): Power supply is experiencing an over-current condition.
- SERVICE LED
  - Amber (solid): Power supply is experiencing a high temperature condition.
- FAULT LED
  - Red (solid): Module is experiencing and internal fault.
  - Red (blinking): Communication has been lost with the rack controller.

Other combinations of power supply module LEDs, and the corresponding power supply condition, are listed in Table 4.1.3 on page 4.1.42.

Table 4.1.3: Other Power Supply LED States

Condition	Power Supply LED State			
	AC OK (green)	DC OK (green)	SERVICE (amber)	FAULT (red)
OK	On	On	Off	Off
Thermal alarm (5 degrees before shutdown)	On	On	On	Off
Thermal shutdown	On	Off	On	On
Defective fan, blown ac fuse, boost stage failure or over voltage latched shutdown	On	Off	Off	On
Ac present, but not within limits	Blinks	Off	Off	Off
Ac not present	Off	Off	Off	Off
Non-catastrophic internal failure	On	On	Off	On
Standby	On	Off	Off	Off
Service Request (PMBus mode)	On	On	Blinks	Off
Communications Fault	On	On	Off	Blinks

Operating with Defective or Missing Power Supply or LVPS Modules

You can operate the transmitter - at normal desired power level - with one defective or missing LVPS module, assuming the transmitter was using dual LVPS modules. To replace an LVPS module, go to "LVPS / Power Supply Module Replacement" on page 4.1.52.

You can operate the transmitter - at a reduced output power level - with multiple defective or missing power supply module(s) (see Table 4.1.2 on page 4.1.37). To replace a power supply module, go to "LVPS / Power Supply Module Replacement" on page 4.1.52.

Troubleshooting NTP Issues

Use the following procedure to troubleshoot a transmitter that is not receiving NTP date/time updates from an NTP server.

Requirements:

- Access to the transmitter's AUI
- SSH connection using PuTTY

Procedure:

1. Confirm network connectivity to the transmitter:
   - Log in to the transmitter's AUI.
   - SSH into the transmitter using PuTTY. Log in using root.

NOTE: If you do not have the root password, you may need to obtain it from another source, such as an OS Recovery Information Sheet.

2. Confirm the AUI settings are actually in use by the transmitter's operating system:
   - In PuTTY, type ntpq –pn. Press Enter.
   - This will return the NTP server in use by the transmitter.
   - Verify that it matches up with the server listed in the User Settings -> NTP Servers section of the AUI. See Figure 4.1.13.

Figure 4.1.13: User Settings -> NTP Servers

```
vsarm:~# ntpq -pn
     remote           refid      st t when poll reach   delay   offset  jitter
==============================================================================
*129.6.15.28     .ACTS.           1 u   16 1024  317  114.315   -0.157   0.977
```

3. If they differ from that shown in the Remote AUI, you may be looking at cached data. Clear the browser cache.
   - In PuTTY, type: traceroute <NTP address>. Press Enter.
   - This is will send a packet of data (like a ping) to the NTP server, but will report each 'hop' along the way.
   - If the traceroute command fails, suspect a network issue.

4. Confirm that the transmitter can actually contact the NTP server.
   - In PuTTY, type: traceroute <NTP address>. Press Enter.
   - This is will send a packet of data (like a ping) to the NTP server, but will report each 'hop' along the way.
   - If the traceroute command fails, suspect a network issue.
5. If the transmitter's local time is >1000 seconds different than the NTP server time, the NTP daemon on the transmitter may not update the clock. Try forcing a manual update of the NTP information.
   - In PuTTY, type service ntpstop. Press Enter. This stops the NTP service.
   - In PuTTY, type date. Press Enter. This indicates the time and date on the transmitter.
   - In PuTTY, type ntpdate <NTP address>. Press Enter. This indicates the time and date on the NTP server.
   - In PuTTY, type ntpdate –u <NTP address>. Press Enter. This updates the transmitter time to match the NTP server time.
   - If the NTP server is reachable by the transmitter, you will see the screen shown in Figure 4.1.14.

Figure 4.1.14: NTP Server Reachable

```
vsarm:~# ntpdate -u 24.56.178.140
 4 Jan 09:27:11 ntpdate[30356]: adjust time server 24.56.178.140 offset -0.03867
4 sec
```

   - If you're using a faulty server address, you will see the screen shown in Figure 4.1.15.

Figure 4.1.15: Faulty NTP Server

```
vsarm:~# ntpdate -u 24.56.178.145
 4 Jan 09:29:48 ntpdate[30361]: no server suitable for synchronization found
```

   - If the ntpdate –u command still fails after confirming the NTP server address, it is possible that UDP port 123 may be blocked on the router or some other firewall. It may need to be opened for the specific transmitter IP address.
   - In PuTTY, type service ntpstart. Press Enter. This starts the NTP service.
   - In PuTTY, type date. Press Enter. You should observe that the time and date has been updated.
6. Still not working?
   - It has been observed that NTP issues were resolved by performing an OS Recovery. Before replacing hardware, perform an OS Recovery.

Replacement Procedures

Table 4.1.4 lists the procedures available in this manual for replacing modules, PWBs and cooling fans.

Table 4.1.4: Replacement Procedures

Module	Replacement Procedure
RF Power Module	See page 4.1.46
Power Amplifier PWB	See page 4.1.49
RF Module Cooling Fan	See page 4.1.51
LVPS / Power Supply Modules	See page 4.1.52
Remote Interface PWB	See page 4.1.55
Fan Tray Cooling Fan	See page 4.1.57
Reject Load Assembly	See page 4.1.59
Controller Module	See page 4.1.61
Single-Board Computer (SBC)	See page 4.1.63
Controller PWB	See page 4.1.66
Exciter Module	See page 4.1.68
Exciter/Control PWB - Exciter	See page 4.1.70
Pre-Amplifier PWB - Exciter	See page 4.1.73
Module Control/Interface PWB	See page 4.1.76
Power Supply Interface PWB	See page 4.1.78
UPS Interface Power Supply	See page 4.1.79
Power Module Combiner PWB (NAPH06)	See page 4.1.81
Power Module Combiner PWB (PR82C)	See page 4.1.84

RF Power Module Replacement

Removing an RF Power Module

1. Confirm the location of the RF power module that is being removed. Note the alarm text includes a Module number (1-2) that is not identified on the RF power module. See Figure 4.1.16 on page 4.1.47 to determine the location for a given RF power module (1-2).

2. Open the transmitter's front door.

3. Set the ENABLE/DISABLE switch on the front of the suspect RF power module to its DISABLE (down) position. This inhibits the module's associated pair of power supply modules.

4. Remove and retain the two M5 securing screws in the front of the module. If necessary, remove the M8 shipping screw in the back of the module (the shipping screws do not need to be reinstalled, and may have already been removed during installation or previous maintenance).

WARNING! Fans with rotating blades are present at the bottom of the RF power module. Take care when removing the module.

5. Grasp the handle on the front of the RF power module and carefully pull the RF power module out of the transmitter, noting that there are catches on the transmitter tray that will prevent the rear of the RF power module from being fully extracted. When the module reaches these catches, lift the rear of the module over the catches by tilting the module's front down and then lift by the rear handle. The module weighs 14.5 kg (32 lbs).

Installing an RF Power Module

1. Grasp the front and rear handles on the RF power module and insert it into the transmitter, ensuring that the rear of the module clears the catches in the transmitter tray.

2. Carefully push the RF power module into place so that its edge-card connector mates with the transmitter.

3. Install both M5 securing screws in the RF power module's front panel.

4. Set the ENABLE/DISABLE switch on the front of the RF power module to its ENABLE position (see Figure 4.1.16 on page 4.1.47). This activates the module and its two associated power supplies.

5. With RF off and the system interlock circuit intact (closed), use the controller's front panel UI to initiate a Xmtr PA Bias routine (see Main Menu -> System Settings -> Factory Settings -> Calibration; refer to the Operations and Maintenance Manual for more detail).

6. Close the front door.

Figure 4.1.16: RF Power Module Numbers/Locations

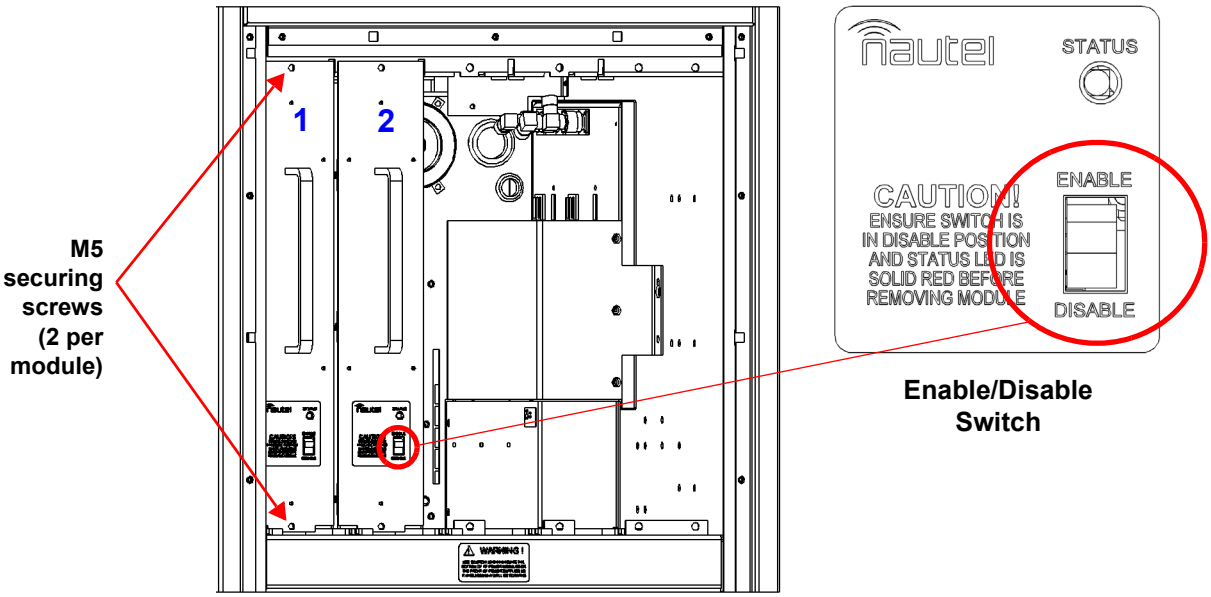

Partial Front View - Front Door Open

Troubleshooting RF Power Modules

Maintenance Philosophy

Maintenance on an RF power module consists of replacing PA PWBs or cooling fans.

Special Tools and Test Equipment

The following tools and test equipment are required to troubleshoot an RF power module.

- Digital multimeter
- Torque screwdriver, capable of torquing up to 0.67 N-m (6 in.-lbs). Required for installing attaching hardware for PA PWB FETs.
- Soldering iron and desoldering tool
- GV5/GV3.5 station spares kit, if purchased (contains replacement PA PWBs and cooling fans)
- GV5/GV3.5 site spares kit, if purchased (contains replacement cooling fans)
- Electrical schematics in Section 4 of this manual.
- Mechanical drawing in Section 5 of this manual.

Electrostatic Precautions

The RF power module contains semiconductor devices that are susceptible to damage from electrostatic discharge. Be sure to follow the electrostatic precautions in "Electrostatic Protection" on page 4.1.3 at all times.

Preparation for Troubleshooting

1. Follow the procedure in "Removing an RF Power Module" on page 4.1.46 to remove the RF power module from the transmitter.
2. Place the RF power module on a suitable work surface.
3. Based on the AUI (local or remote) or controller UI alarm that prompted RF power module troubleshooting, replace either the defective PA PWB (see "PA PWB Replacement" on page 4.1.49) or defective cooling fan (see "Module Cooling Fan Replacement" on page 4.1.51).

NOTE: If a failure occurs, you must replace the entire power amplifier PWB, rather than an individual FET. A spare power amplifier PWB (NAPA31C) is provided in the transmitter station spares kit, if purchased. To order a station spares kit or replacement power amplifier PWB contact Nautel. Failure to observe this recommendation may void your equipment warranty or cause further failures.

PA PWB Replacement

See Figures MD-13 and MD-17 in the Mechanical Drawings section (Section 5) of this manual.

1. Remove the RF power module's right-hand side cover (see Figure 4.1.17 on page 4.1.51) by removing 11 M3 countersunk screws. Retain hardware for re-installation.
2. Before replacing a suspect PA PWB, verify the fault is with the suspect PA PWB by performing the continuity and resistance checks detailed in "PA Resistance Checks" on page 4.1.50. If you are prompted to replace a PA PWB, return to Step 3 of this procedure.
3. Unsolder and remove the four solder connections to the defective PA PWB. They include two 24 AWG links (to pads V and X), a white 12 AWG wire (to pad U) and a 16 AWG link (to pad D).
4. Remove the two #4 screws, split and flat washers securing the FET to the heat sink.
5. Remove the seven M3 screws securing the PA PWB to the heat sink.
6. Obtain the replacement NAPA31C PA PWB from the station spares kit, if purchased.

NOTE: FETs are static sensitive and must be handled in a static protected manner.

7. Spread a small amount of thermal compound (Nautel Part # HAG39, from the station spares kit), thinly and evenly, on the bottom of the FET flange on the new PA PWB.
8. Secure the PA PWB on the module's heat sink using the seven screws removed in Step 5. Ensure correct orientation (same as the adjacent PWB). Do not tighten the four screws at this time.

> **CAUTION!** When installing FET securing hardware, you can damage the FET case if you fully tighten one screw while the other is loose. Avoid this by alternately tightening the two screws.

9. Secure the FET (Q1) with two # 4 screws, a mini-flat washer and a new split washer. Using a torque screwdriver, alternate tightening the left and right screws on each FET, a quarter turn at a time, until 6 inch-pounds (0.67 Newton-meters) of torque has been applied.
10. Tighten the seven PWB screws.
11. Solder the wires removed in Step 3.
12. Re-install the RF power module right-hand cover and return the module to the transmitter (see "Installing an RF Power Module" on page 4.1.46).

PA Resistance Checks

1. Using a digital multimeter, check the continuity across fuse F1 on the suspect PA PWB.
   - If the measurement is an open circuit, replace the PA PWB (see "PA PWB Replacement" on page 4.1.49).
   - If the measurement is short circuit (near 0 Ω), proceed to Step 2.
2. Using a digital multimeter, measure the resistance between each gate lead of the FET and the metal flange of the FET.
   - If the measurement is less than 8 kΩ, replace the PA PWB (see "PA PWB Replacement" on page 4.1.49).
   - If the measurement is between 8 kΩ and 17.5 kΩ, check the other PA PWBs for a failure. If none of the other PA PWBs have failed, replace the original suspect PA PWB.
   - If the measurement is greater than 17.5 kΩ, proceed to Step 3.
3. Using a digital multimeter, check the continuity between each drain lead of the FET (positive meter probe) and the metal flange of the FET (negative meter probe).
   - If the measurement is open circuit, the PA PWB is OK and does not require replacement. Continue troubleshooting and suspect a problem with an associated PWB.
   - If the measurement is not open circuit, replace the PA PWB (see "PA PWB Replacement" on page 4.1.49).

Module Cooling Fan Replacement

See Figure 4.1.17.

1. Remove the RF power module's right-hand side cover by removing the 11 M3 countersunk screws. Retain hardware for re-installation.
2. Disconnect the suspect cooling fan's mating plug (B1P1 through B6P1). Cut the tyrap that secures the fan wiring to the splitter PWB.
3. Remove and retain the cooling fan's two M3 captive screws that secure the fan to the module.
4. Obtain a replacement fan (Nautel Part # ZAP50) from the site spares kit or station spares kit or from a suitable equivalent (vendor part # is Minebea Motor Mfg. Corp. 3115RL-07W-B79-E51).
5. Install the replacement fan using retained screws. Torque hardware to 1.0 inch-pounds only to avoid cracking the fan's body. Twist the fan's mating plug three times (reduces RFI) and reconnect it to the splitter PWB. Secure the wiring using a tyrap (Nautel Part # HT66) from the ancillary kit.
6. Re-install the right-hand side cover using retained hardware.
7. Return the RF power module to the transmitter (see "Installing an RF Power Module" on page 4.1.46).

Figure 4.1.17: Replacing a Power Module Cooling Fan

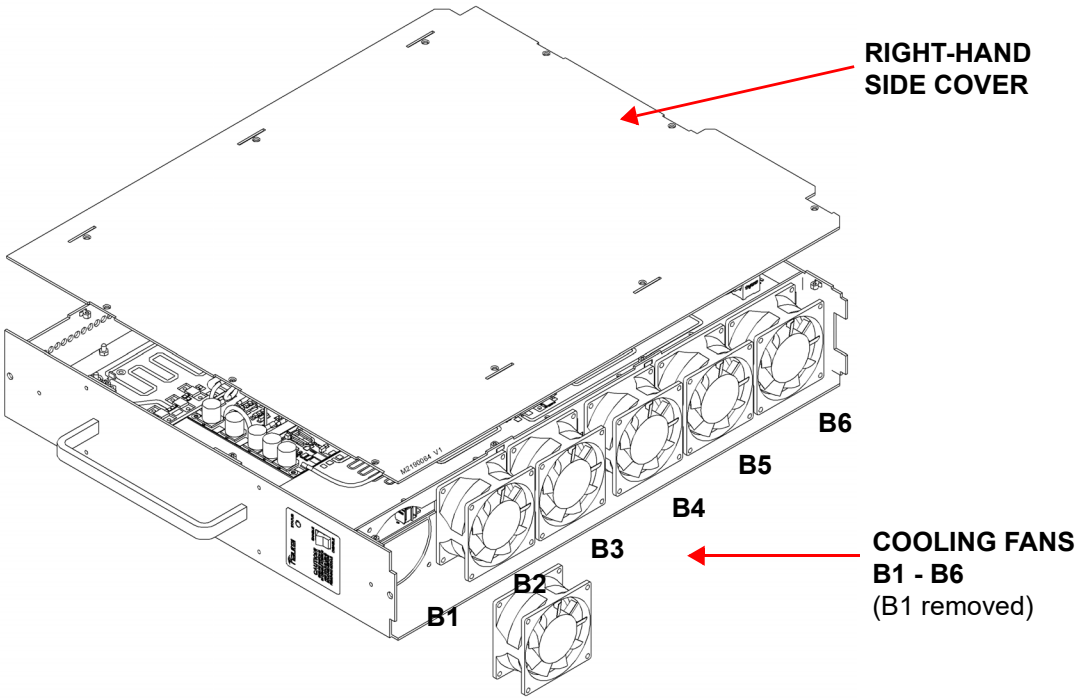

LVPS / Power Supply Module Replacement

WARNING! Lethal voltages exist inside the transmitter when the power is turned on. Follow replacement instructions carefully to ensure safety for maintenance personnel during power supply replacement.

Figure 4.1.18: Location of LVPS / Power Supply Modules

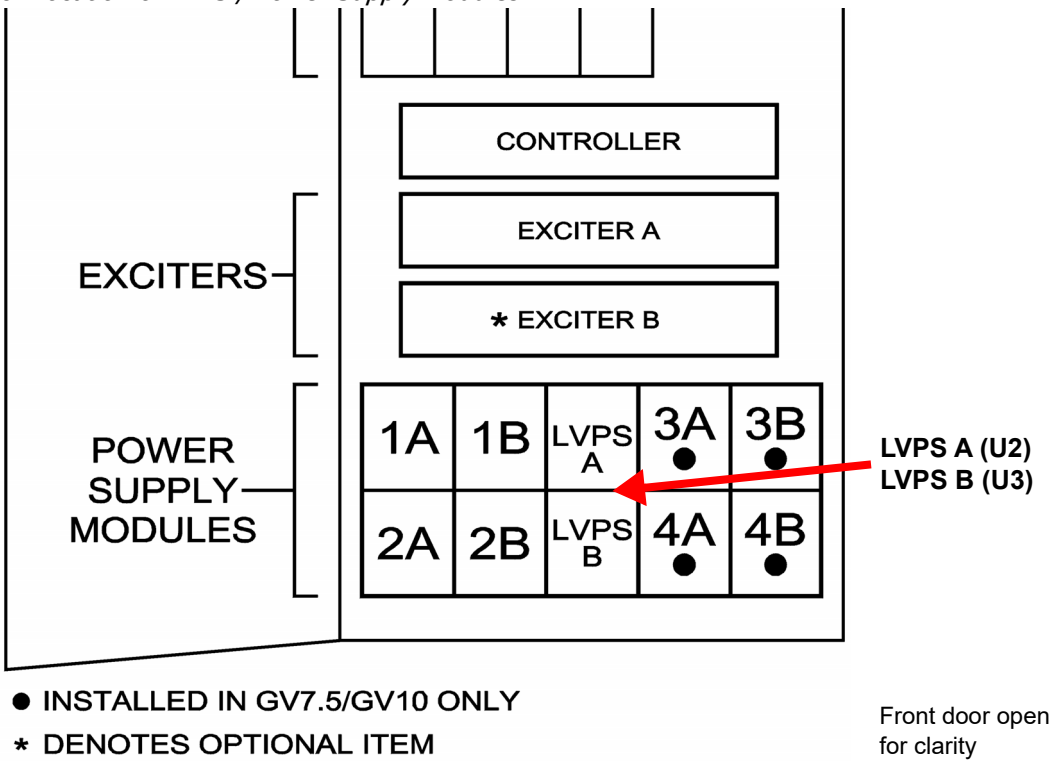

Power Supply Module	Associated RF Power Module
1A (U4), 1B (U5)	1 (A8)
2A (U6), 2B (U7)	2 (A9)
3A (U8), 3B (U9) ●	3 (A10) ●
4A (U10),4B (U11) ●	4 (A11) ●

1. Use the transmitter's AUI (local or remote) or controller UI alarm status/logs to isolate the defective low voltage power supply (LVPS), noting there may be redundant (dual) supplies installed, or Power Supply module.
2. Open the transmitter front door and locate the suspect LVPS / Power Supply module. See Figure 4.1.18 on page 4.1.52.
3. Using Figure 4.1.19 on page 4.1.53 as a guide, remove the LVPS / Power Supply module from the front of the transmitter.
4. Locate or obtain a replacement LVPS / Power Supply module (Nautel Part # UG132).
5. Using Figure 4.1.19 on page 4.1.53 as a guide, reinstall the new LVPS / Power Supply module.

Figure 4.1.19: Removing/Installing LVPS / Power Supply Modules

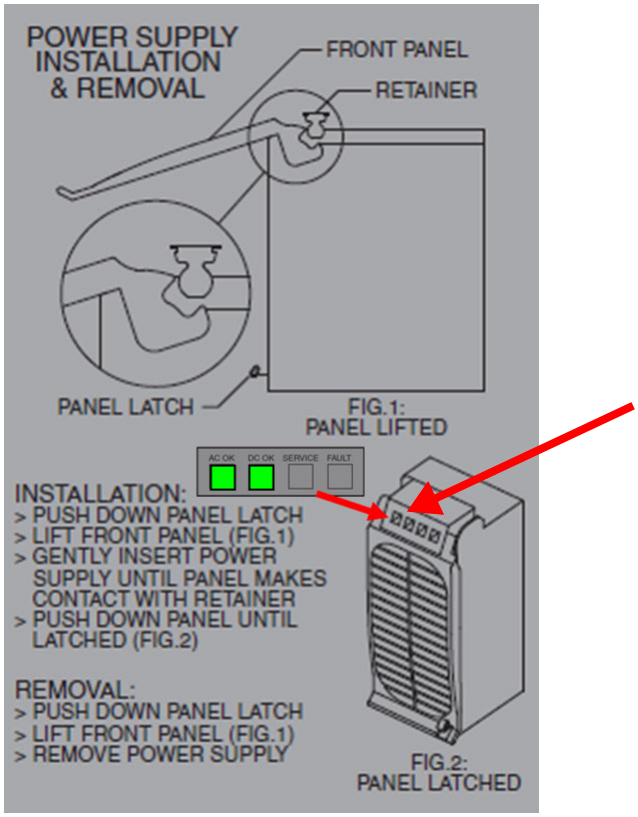

AC OK and **DC OK** LEDs should be on (green) after successful power supply installation.

If the associated RF power module is disabled, the **DC OK** LED will not turn on until the module is enabled.

6. Verify that the AC OK and DC OK LEDs, on the front of the LVPS / Power Supply module, are solid green.

NOTE*:* The FAULT LED (red) may blink temporarily until communication is established between the power supply and the transmitter.

7. The transmitter should resume normal operation and the alarm should clear.

8. Close the transmitter's front door.

Remote Interface PWB Replacement

Using Figure 4.1.20 as a guide, replace the remote interface PWB as follows:

Figure 4.1.20: Remote Interface PWB Location

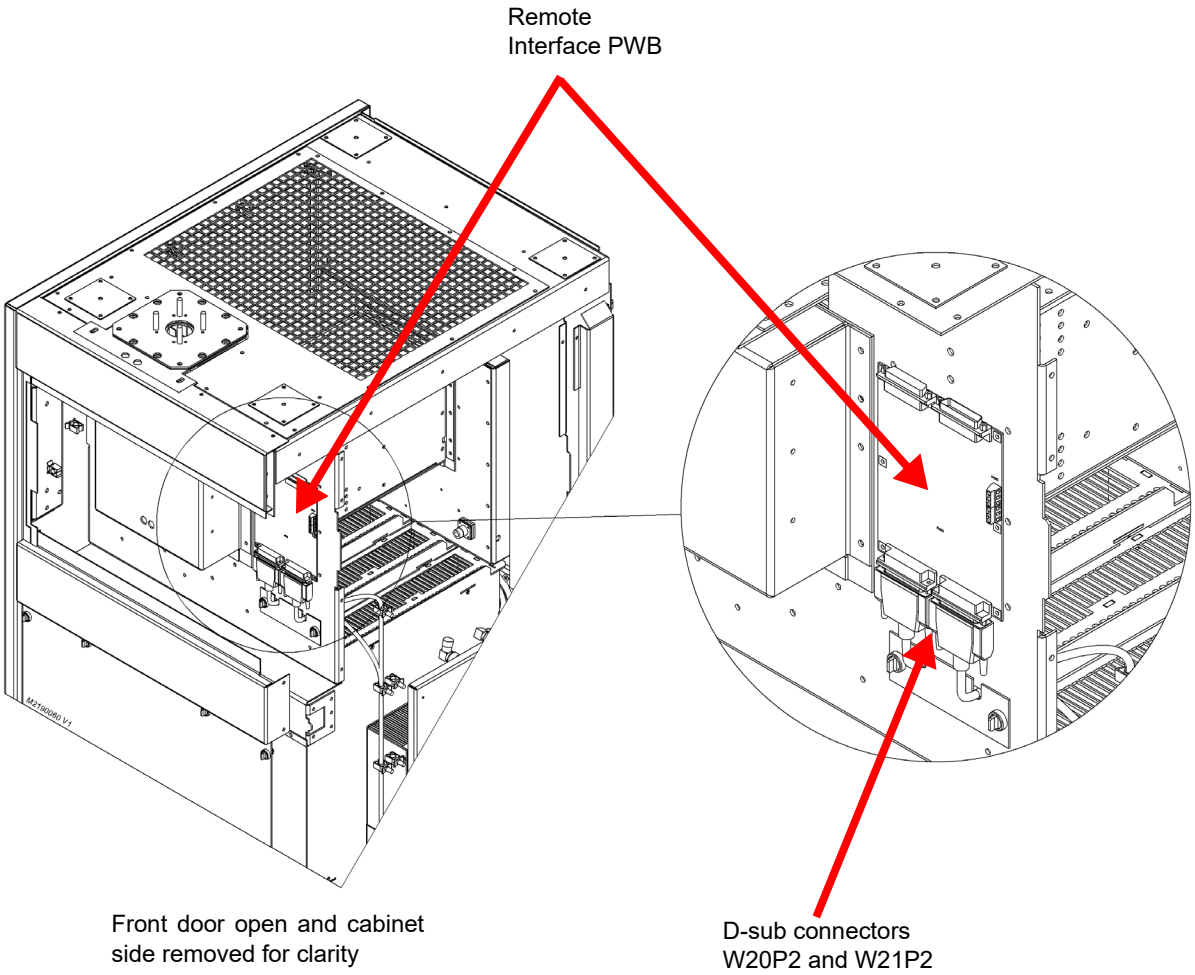

1. Turn off and lock out the transmitter's main ac power.
2. Open the front door to gain access to the remote interface PWB.
3. Remove all customer interface wiring from the remote interface PWB. Note the destination of each wire for ease of reconnecting.
4. Disconnect the two D-sub connectors (W20P2 and W21P2) from the bottom of the PWB and the Cat5E connector (W29P2) from the right-hand side of the PWB (mates with J2).

5. Remove and retain the six sets of mounting hardware from the remote interface PWB. Remove the remote interface PWB from the transmitter.
6. Locate or obtain a replacement remote interface PWB (Nautel Part # NAPI143/01).
7. Set jumpers E1 and E2 on the new remote interface PWB to the same positions as the defective PWB.
8. As applicable, use an indelible marker to identify the LED and switch labels on the new remote interface PWB to match the labels on the defective PWB.
9. Install the new remote interface PWB using retained hardware.
10. Reconnect D-sub connectors W20P2 and W21P2, Cat5E connector W29P2 and all customer interface wiring to the new remote interface PWB.
11. Close the front door and return the transmitter to service.

Fan Tray Cooling Fan Replacement

See Figure 4.1.21.

Figure 4.1.21: Removing the Fan Tray

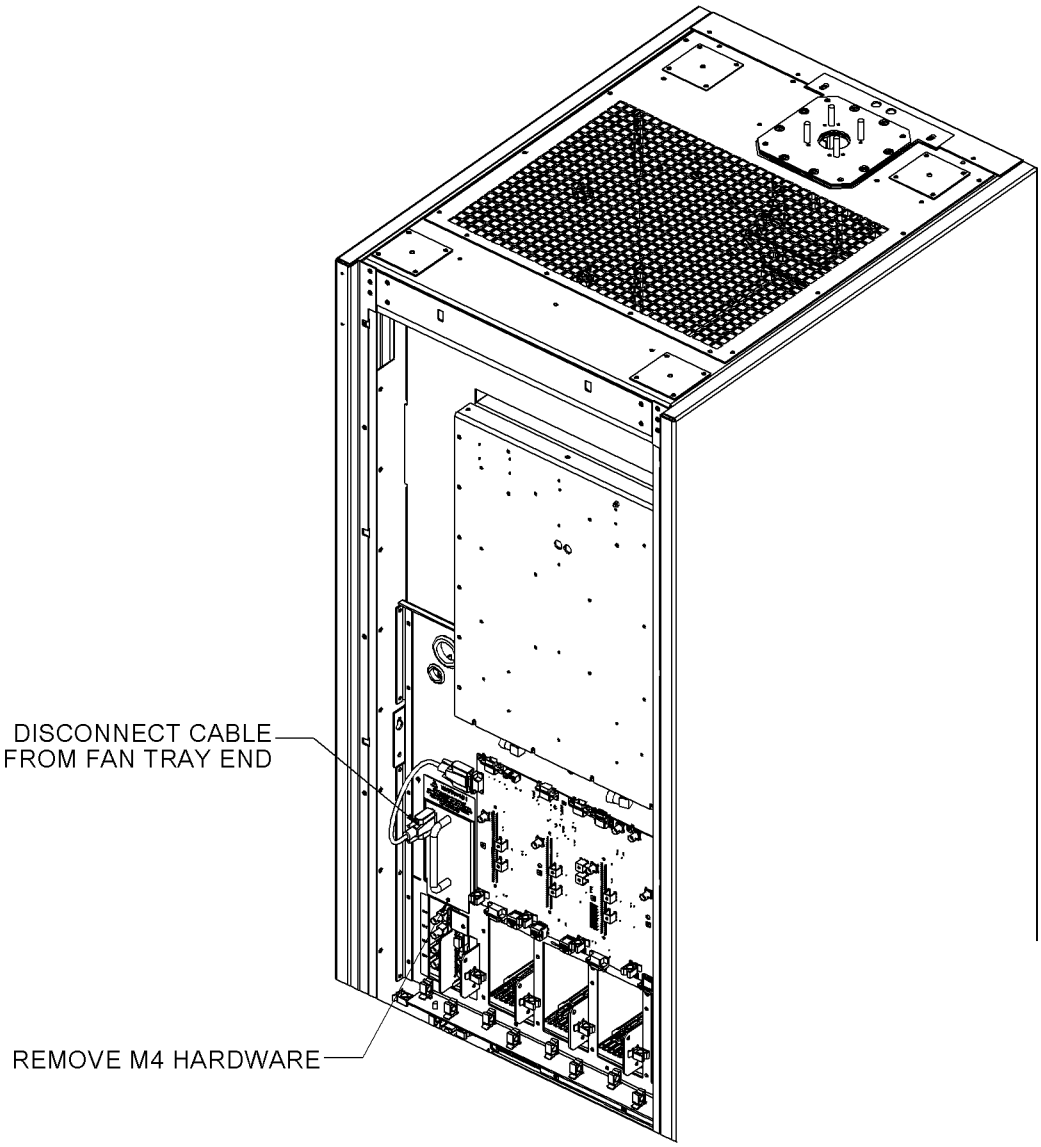

1. Remove the transmitter's upper, rear panel.
2. Disconnect D-sub cable W5P2 from the fan tray assembly.
3. Remove and retain the M4 screw that secures the fan tray to the transmitter.

Figure 4.1.22: Fan Tray Assembly

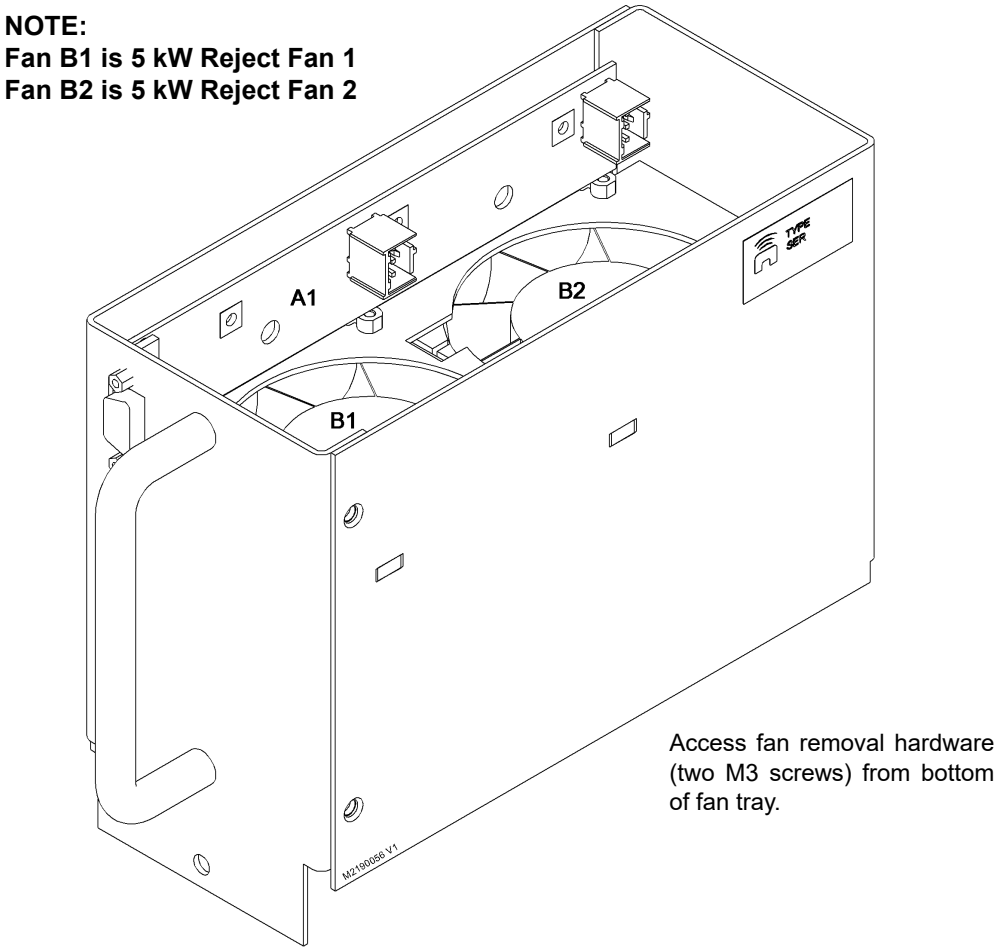

4. Remove the fan tray from the transmitter.
5. Disconnect the suspect fan's mating plug (B1P1 or B2P1).
6. From the bottom of the fan tray, remove and retain the cooling fan's two M3 screws that secure the fan to the fan tray. See Figure 4.1.22 on page 4.1.58.
7. Obtain a replacement fan (Nautel Part # ZAP50) from the site spares kit, if purchased or a suitable equivalent (vendor part # is Minebea Motor Mfg. Corp. 3115RL-07W-B79-E51).
8. Install the replacement fan using retained screws.
9. Reinstall the fan tray and secure using M4 screw. Reconnect D-sub connector W5P2.

Reject Load Replacement

Using Figure 4.1.23 as a guide, replace a reject load assembly as follows:

Figure 4.1.23: Replacing the Reject Load

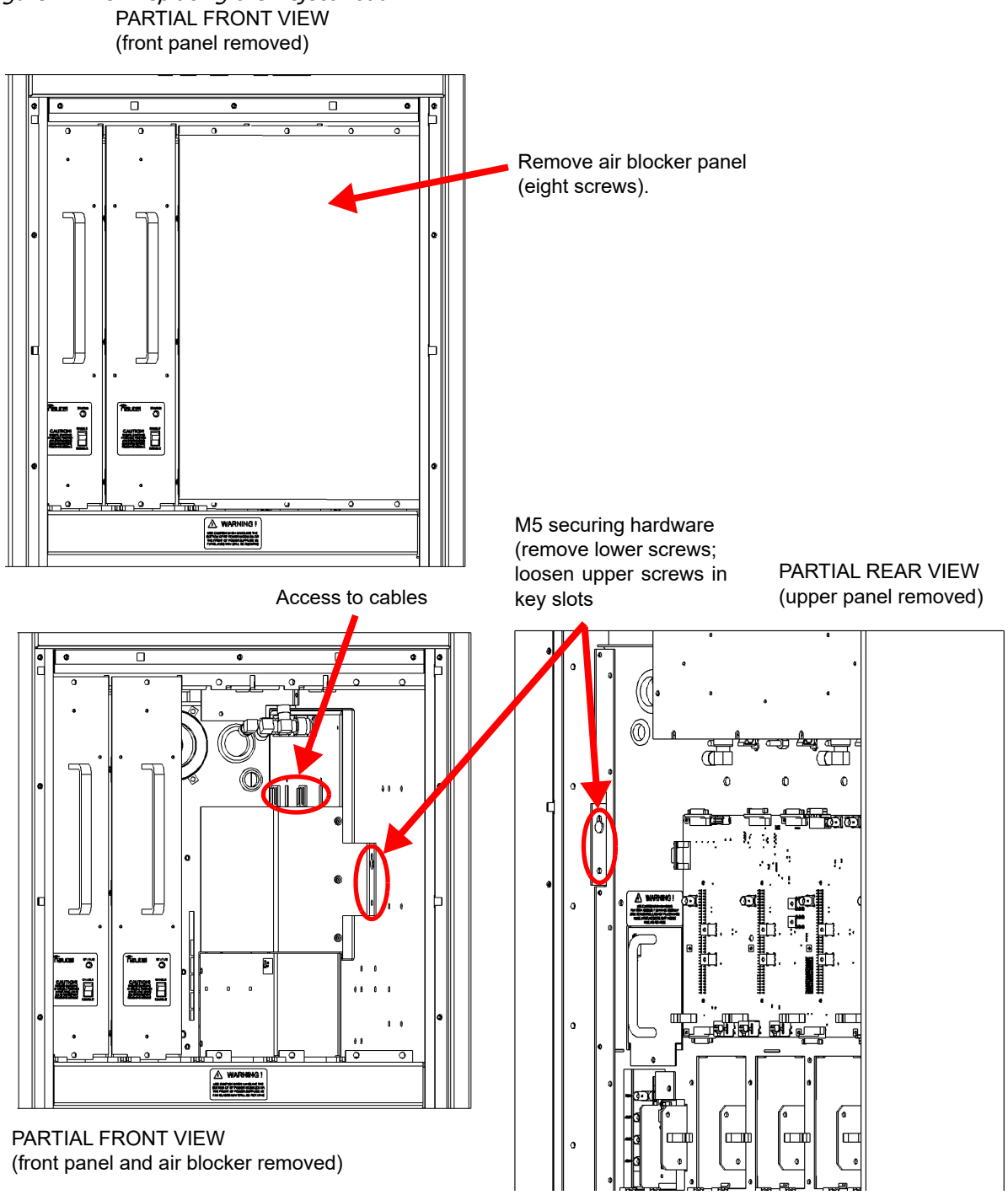

1. Open the transmitter's front door and remove the upper, rear panel.
2. From the front of the transmitter, remove the air blocker panel that is secured with four screws.
3. From the front of the transmitter, disconnect the mating connectors (one ribbon cable and one N-type) from the back of the reject load assembly.
4. There are four M5 screws that secure the reject load assembly to the transmitter, accessible from the front and rear of the transmitter. Remove and retain the two lower screws. Loosen the upper screws that are in key slots; they do not need to be removed.
5. From the front of the transmitter, remove the reject load assembly.
6. Obtain a replacement reject load (Nautel Part # NAL14) and install by reversing the instructions in Step 1 through Step 5.

Controller Replacement

Figure 4.1.24: Location of Controller Module

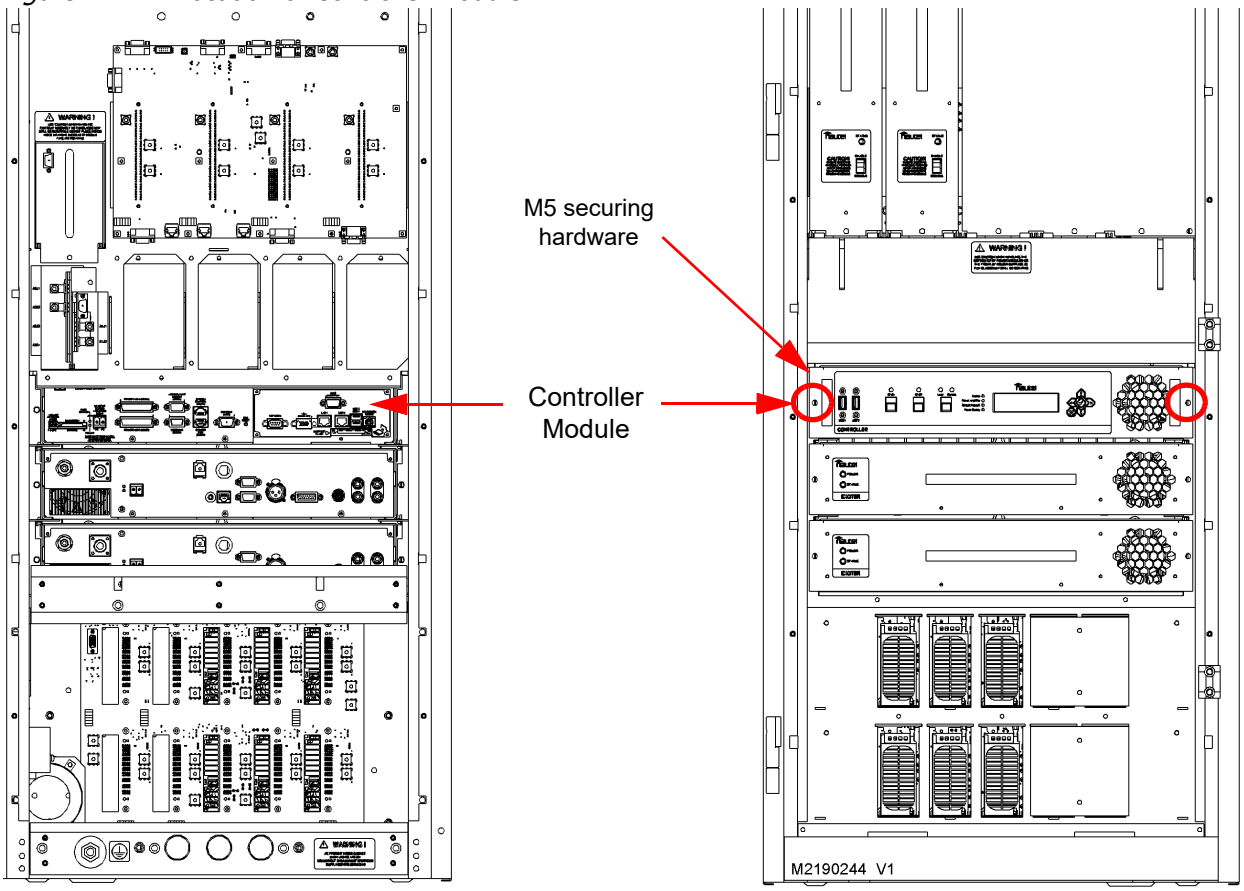

PARTIAL REAR VIEW
(panels removed)

PARTIAL FRONT VIEW
(front door open)

1. If possible, use the controller's front panel UI and the remote AUI to record all custom user settings including: network settings, preset/audio settings, user accounts, logs, SNMP configuration, email configuration, time zone, notifications and playlists. It is recommended that all User Settings be logged prior to replacing the controller module and then restored upon completion of the change.
2. Press RF Off. Turn off and lock out the transmitter's main ac power.
3. Open the front door and remove the upper, rear panel.
4. From the rear of the transmitter, disconnect the mating connectors from the controller module (A4).

5. From the front of the transmitter, remove the two M5 screws that secure the controller module to the transmitter and pull out the controller module. If you are replacing the controller module's controller PWB (A2), see "Controller PWB Replacement - Controller" on page 4.1.66.

6. Obtain a replacement controller module (Nautel Part # NAC124) and install it by reversing the instructions in Step 4 and Step 5.

7. Enable and turn on ac power to the transmitter.

> **CAUTION!** There are two possible configurations for the controller module being installed, each with a potential different effect on transmitter operation.
>
> – A "blank" controller module, which is the typical configuration shipped by Nautel, will take on the transmitter's profile (transmitter type, calibration data, etc.) upon installation. It should require no additional configuration or setup.
>
> – A "configured" controller module is one that has been configured for a specific customer's transmitter. Upon installation, the transmitter will take on the controller's profile. If this controller was not configured for the transmitter it was installed in, your transmitter's operational characteristics may change. If this occurs, CONTACT NAUTEL to restore proper operation.

8. Use the remote AUI's System Settings -> Upgrade Software page to view the Details of the installed software. Upgrade software as required. See the Operations & Maintenance Manual and any applicable Nautel-supplied Information Sheets for detailed instructions.

9. Restore all custom user settings that were recorded in Step 1.

10. Ensure the transmitter configuration is restored in the Controller's UI HW Config menu by selecting Installed Exciter (A/B), LVPS Hardware (correct number of LVPS modules) and UPS Installed (yes/no). See the Operations & Maintenance Manual for detailed instructions.

11. With RF off and the system interlock circuit intact (closed), use the controller's front panel UI to initiate a Xmtr PA Bias routine (see Main Menu -> System Settings -> Factory Settings -> Calibration; refer to the Operations and Maintenance Manual for more detail).

12. Close the transmitter's front door and install the upper, rear panel.

13. Restore the transmitter to the desired operational state.

Single-Board Computer (SBC) Replacement

Replace the controller module's single-board computer (SBC) (A4A1) as follows:

1. Switch off (disable) the transmitter's ac power source.
2. Open the front door and remove the rear filter panel that provides access to the controller module (A4). Remove the controller module (A4) as detailed in "Controller Replacement" on page 4.1.61, noting that some of the SBC's mating connectors are connected via the controller's rear panel.
3. Remove the controller's top cover to gain access to the SBC (see Figure 4.1.25). Retain hardware for re-installation.

Figure 4.1.25: Single-Board Computer (SBC) Location - Controller Module top view

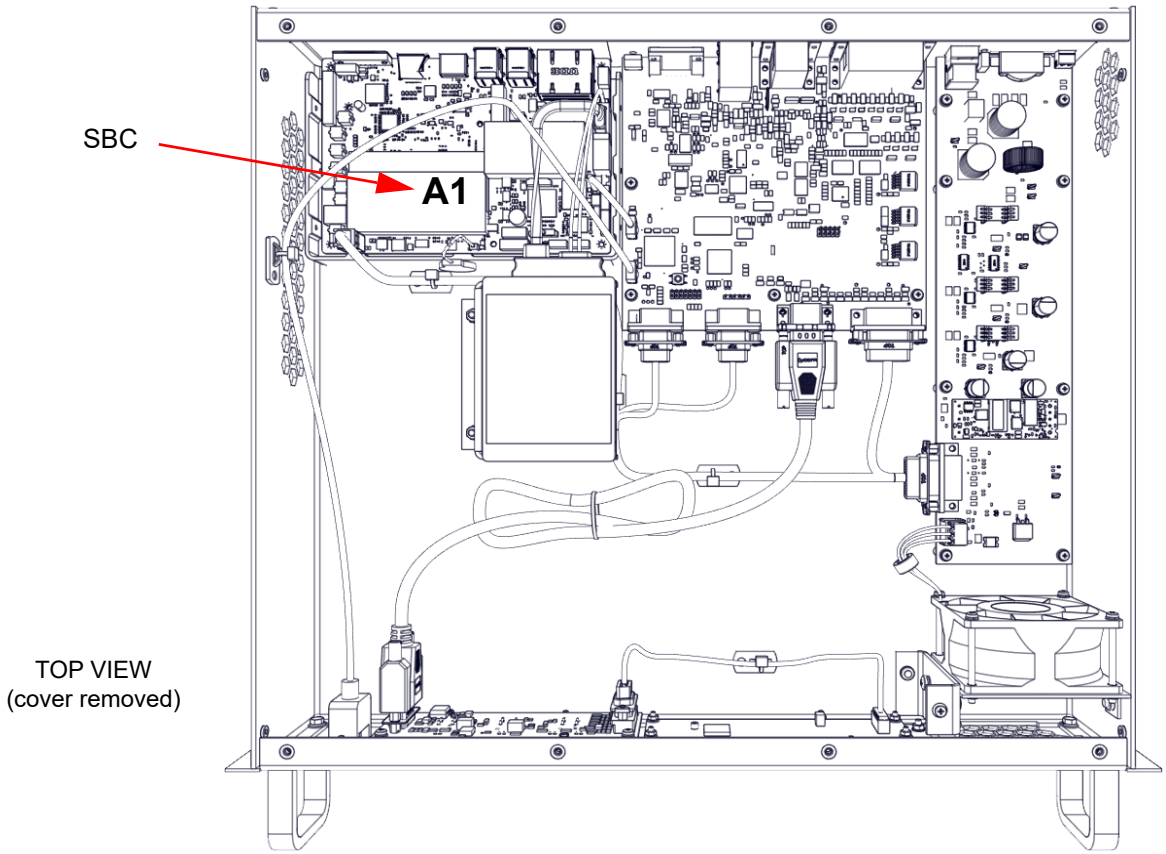

Figure 4.1.26: SBC Connections

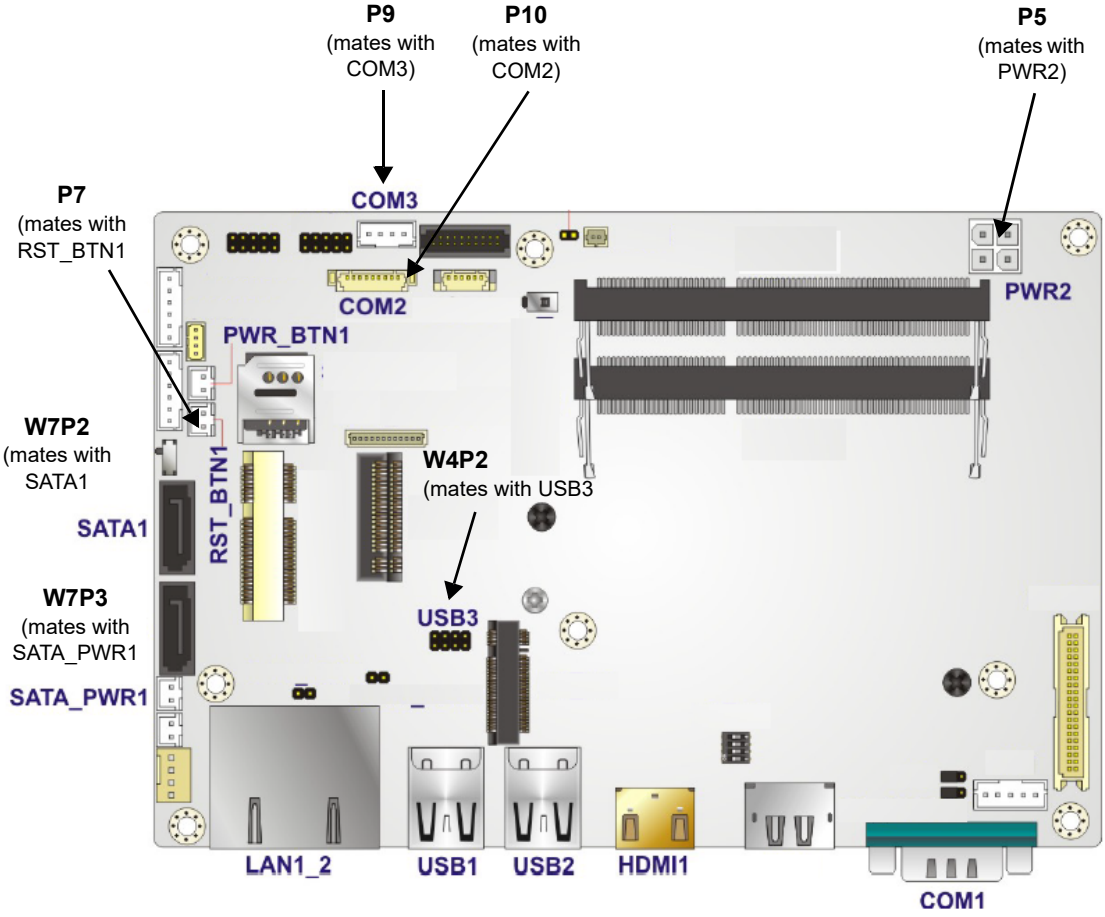

Refer to the Wiring /Connector Lists (section 4.3 of this manual) for detailed connector mating information for the controller module and SBC

4. Disconnect the remaining mating connectors from the SBC (see Figure 4.1.26). At the rear panel, remove any securing hardware for connectors that protrude through the rear panel. Retain hardware for re-installation.

5. From the bottom of the controller module, remove the SBC from the controller module by removing four 6-32 securing screws (see Figure 4.1.27 on page 4.1.65). Retain hardware for re-installation.

Figure 4.1.27: SBC Securing Hardware

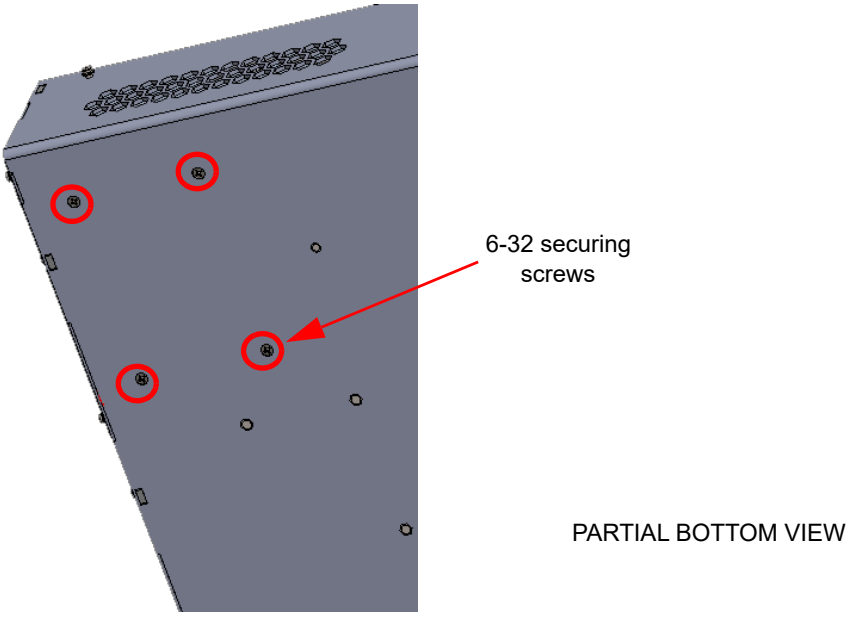

6. Obtain a replacement SBC (Nautel Part # 207-8720) and install in the controller using four 6-32 securing screws.
7. Reconnect all mating connectors to the SBC (see Figure 4.1.26 on page 4.1.64).
8. Re-install the controller's top cover using retained hardware.
9. Re-install the controller in the transmitter cabinet. Re-install the rear filter panel and close the front door.
10. Switch on (enable) the transmitter's ac power source and restore desired operation.

Controller PWB Replacement - Controller

Using Figure 4.1.28 as a guide, replace the controller module's controller PWB (A4A2) as follows:

Figure 4.1.28: Controller PWB Location - Controller Module top view

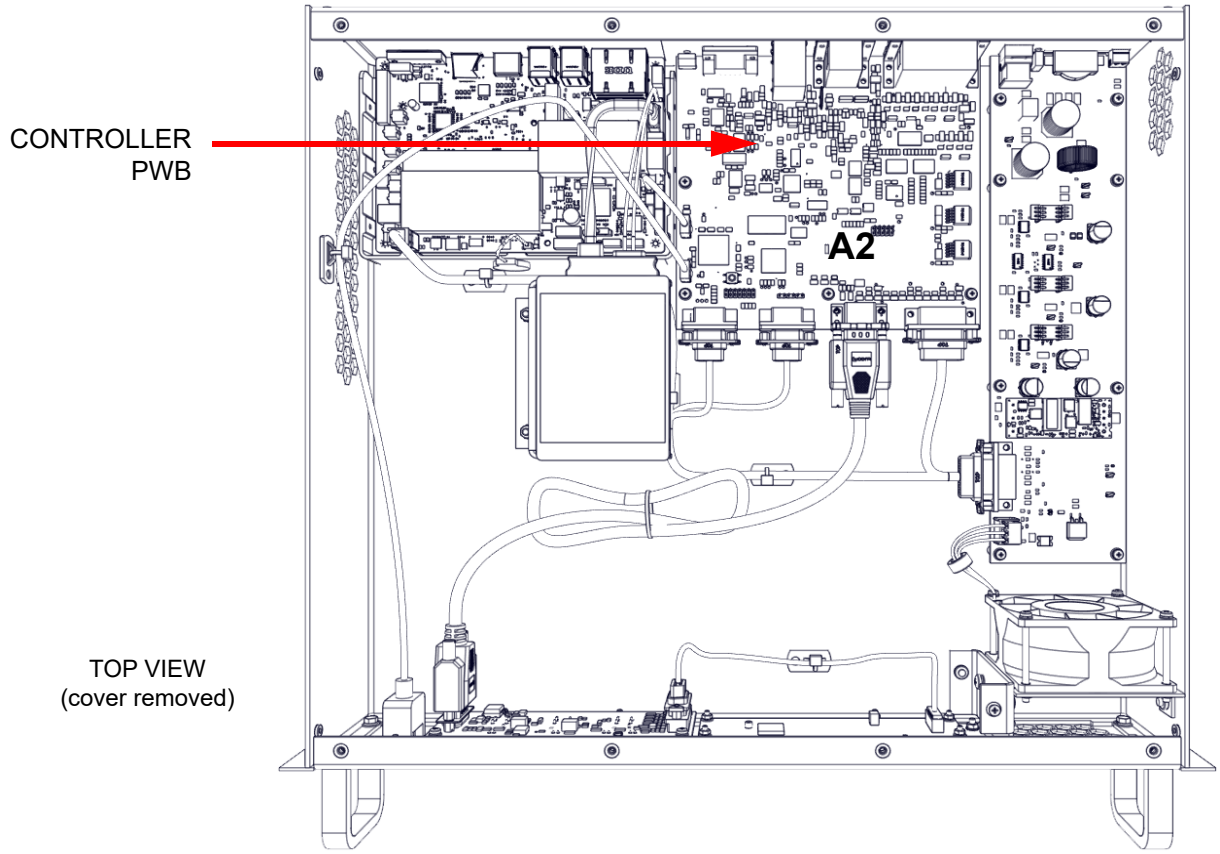

1. Remove the controller module (A4) as described in "Controller Replacement" on page 4.1.61.
2. Place the controller module on a suitable work surface. Remove the top cover. Retain hardware for re-installation.
3. Disconnect all mating plugs from the controller PWB (A2) inside the controller module.
4. At the rear panel, remove any securing hardware for connectors that protrude through the rear panel. Retain all hardware for re-installation.
   - Locate the two DB-25 connectors (J5A and J5B) and the three DB-9 connectors (J6A, J6B and J8) on the rear panel. Using a 5 mm nut driver or socket, remove the mounting nuts.

5. Remove the three small Phillips screws, which mount the front of the controller PWB to the chassis, located along the edge of the controller PWB. Retain hardware for re-installation.
6. Slightly lift the front edge of the controller PWB and pull towards the front of the controller.
7. Locate or obtain a replacement controller PWB (Nautel Part # NAPC163).

> **CAUTION!** When re-installing the controller PWB, lift the PWB high enough so that the mounting pillars do not damage parts on the underside of the PWB.

8. Install the replacement controller PWB. Replace all hardware for the through-chassis connectors.
9. Install the three Phillips screws that mount the front of the controller PWB to the chassis.
10. Reconnect all internal cables to the controller PWB. If necessary, refer to Section 4.3 (Wiring/ Connector Lists) of this manual for connector mating details for A2.
11. Reinstall the controller's top cover.
12. Remove the "Interlock" jumper, if applicable, from J5A of the original controller PWB and reinstall it on the new controller PWB between J5A pins 19 and 20.
13. Re-install the controller in the transmitter and reconnect all external mating connectors, removed previously. Restore all previous settings as described in "Controller Replacement" on page 4.1.61.

Exciter Replacement

Figure 4.1.29: Location of Exciter Module

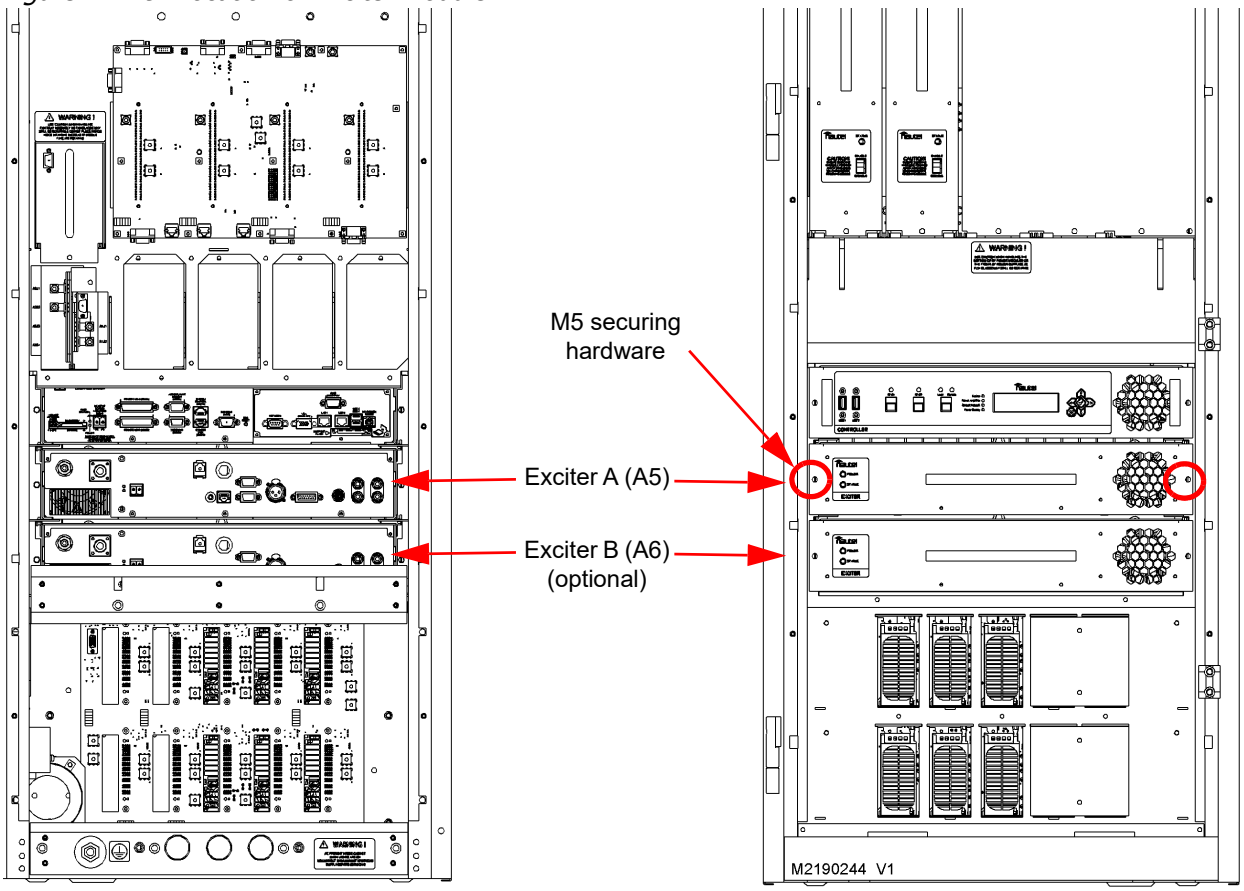

PARTIAL REAR VIEW (panels removed)

PARTIAL FRONT VIEW (front door open)

1. For dual exciter transmitters, ensure the other exciter (A5 or A6) is operating as the main RF drive source and disable automatic changeover (see the Operations & Maintenance Manual).

NOTE: If it is not possible to operate the other exciter or your transmitter is single-exciter only, press RF Off and turn off the transmitter's main ac power source.

2. Open the transmitter's front door and remove the upper, rearpanel.

3. From the rear of the transmitter, disconnect the mating connectors from the appropriate exciter module (A5 or A6).

4. From the front of the transmitter, remove the two M5 screws that secure the exciter module to the transmitter and pull out the exciter module. If you are replacing the exciter module's exciter/control PWB (A1), see "Exciter/Control PWB Replacement - Exciter" on page 4.1.70.

5. Obtain a replacement exciter module (Nautel Part # NAE107A or newer) and install it by reversing the instructions in Step 3 and Step 4.

6. Close the transmitter's front door and re-install the upper, rear panel.

7. If it was necessary to turn RF off and disable ac power in Step 1, enable and turn on ac power to the transmitter.

8. Restore the transmitter to the desired operational state. If the replacement exciter is intended to be the main RF drive source, use the Changeover menu to establish the main/active exciter. Restore the automatic changeover setting, if applicable.

Exciter/Control PWB Replacement - Exciter

Using Figure 4.1.30 as a guide, replace the exciter module's exciter/control PWB (A5A1 or A6A1) as follows:

Figure 4.1.30: Exciter/Control PWB Location - Exciter

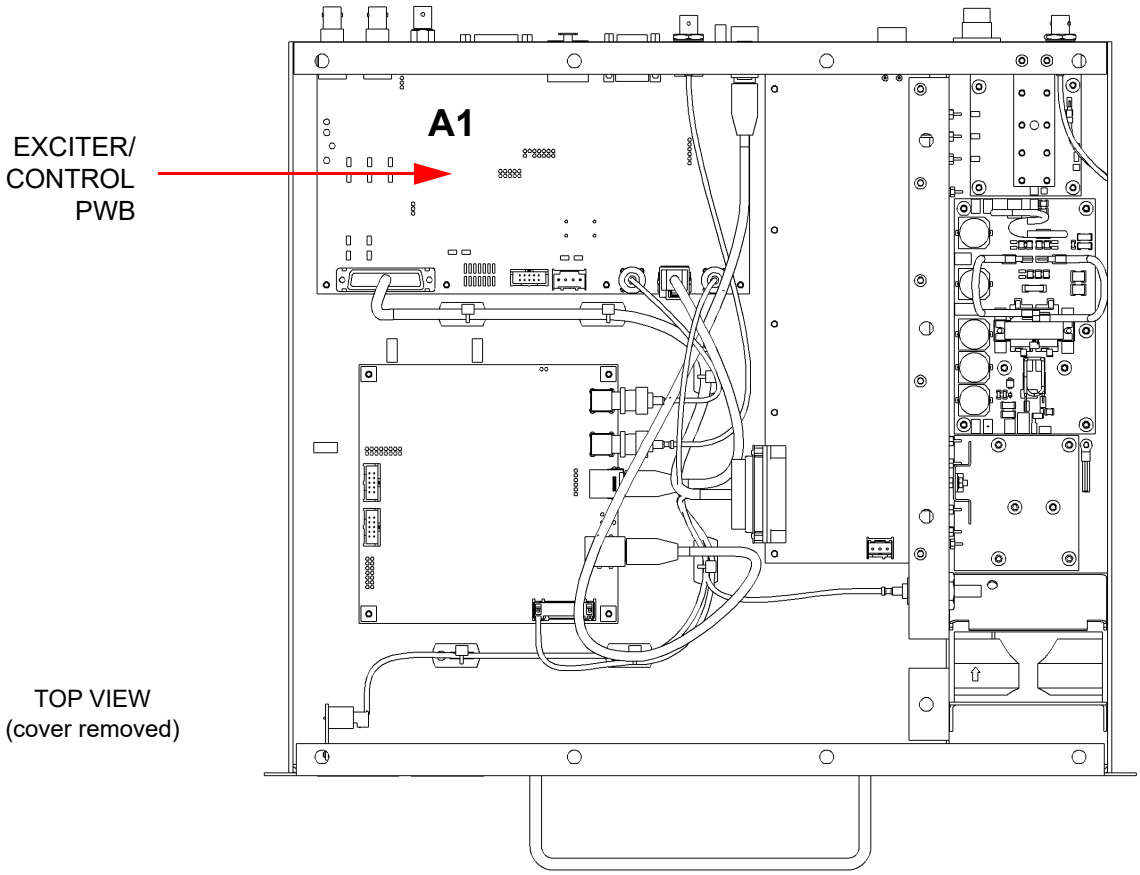

1. Remove the exciter module (A5 or A6, as applicable) as described in "Exciter Replacement" on page 4.1.68.
2. Place the exciter module on a suitable work surface. Remove the top cover. Retain hardware for re-installation.
3. Disconnect all mating plugs from the exciter/control PWB (A1), inside the exciter.

4. At the rear panel, remove any securing hardware for connectors that protrude through the rear panel. Retain all hardware for re-installation.

   – Locate the two DB-9 connectors (J3A and J3B) and the DB-15 connector (J5) on the rear panel. Using a 5 mm nut driver or socket, remove the mounting nuts.

   – Locate the AES/EBU XLR audio connector (J4) on the rear panel. Remove the two small pan-head Phillips screws.

   – Remove the silver push button connector lock ("push" lever) on the XLR connector. Locate the HAS78 removal tool from the ancillary kit, provided with the transmitter. Follow the manufacturer's instructions in Figure 4.1.31 on page 4.1.72 to remove the push button. You will need access to the front and rear of the receptacle to remove it.

   – See Figure 4.1.32 on page 4.1.72. Remove the locking rings from five BNC connectors (J6, J7A, J7B, J8A and J8B). To remove the locking rings, use small 4 - 6 inch slip-jaw pliers. In a counter-clockwise direction, gently loosen (do not tightly pinch or deform) each locking ring. Typically, half a turn with the pliers will loosen a locking ring enough to remove it by hand. Remove and retain the locking rings.

5. Remove the four small Phillips screws, which mount the front of the exciter/control PWB to the chassis, located along the edge of the exciter/control PWB. Retain hardware for re-installation.

6. Slightly lift the front edge of the exciter/control PWB and pull towards the front of the exciter.

7. Locate or obtain a replacement exciter/control PWB (Nautel Part # NAPE86A or newer). Remove the "push" lever from the XLR connector as detailed in Step 4.

   CAUTION! When re-installing the exciter/control PWB, lift the PWB high enough so that the mounting pillars do not damage parts on the underside of the PWB.

8. Install the replacement exciter/control PWB. Replace all hardware for the through-chassis connectors. Take care not to over-tighten the BNC connector locking rings.

9. Install the four Phillips screws that mount the front of the exciter/control PWB to the chassis.

10. Install the "push" lever into the XLR connector. Align it with the slot located on the top section of the connector body and gently press it into position.

11. Reconnect all internal cables to the exciter/control PWB. If necessary, refer to Section 4.3 (Wiring/ Connector Lists) of this manual for connector mating details for A1.

12. Reinstall the exciter's top cover.

13. Re-install the exciter in the transmitter and reconnect all external mating connectors, removed previously. Restore all previous settings as described in "Exciter Replacement" on page 4.1.68.

Figure 4.1.31: Removing the XLR connector's "push" lever

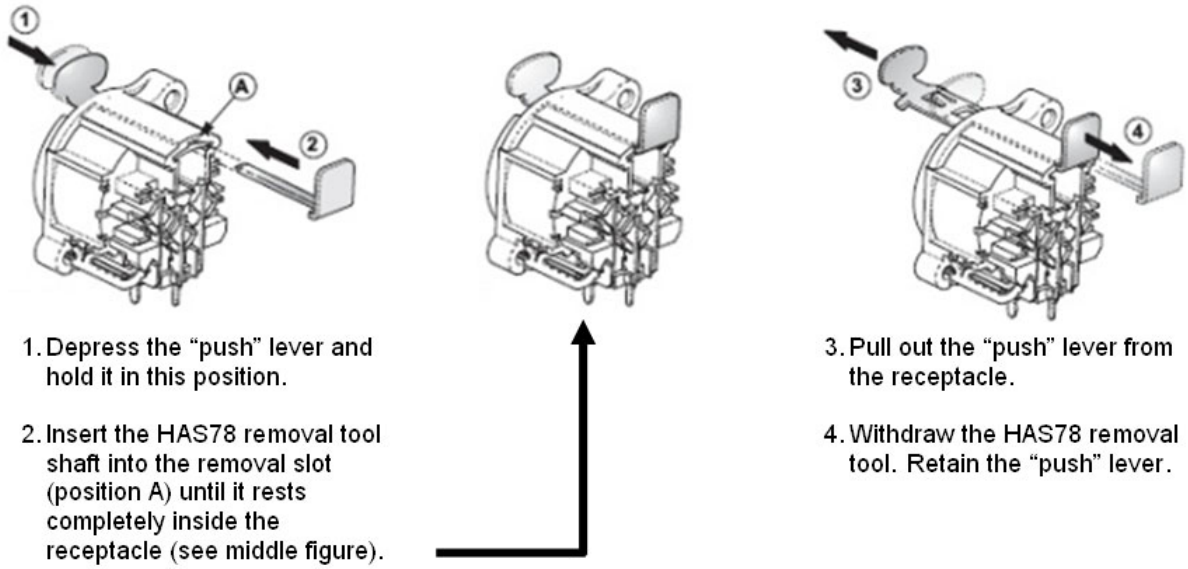

Figure 4.1.32: Loosening the BNC connector's locking ring

Pre-Amplifier PWB Replacement - Exciter

Using Figure 4.1.33 and Figure 4.1.34 on page 4.1.74 as guides, replace the exciter module's pre-amplifier PWB (A5A3) as follows:.

Figure 4.1.33: Pre-Amplifier PWB Location - Exciter

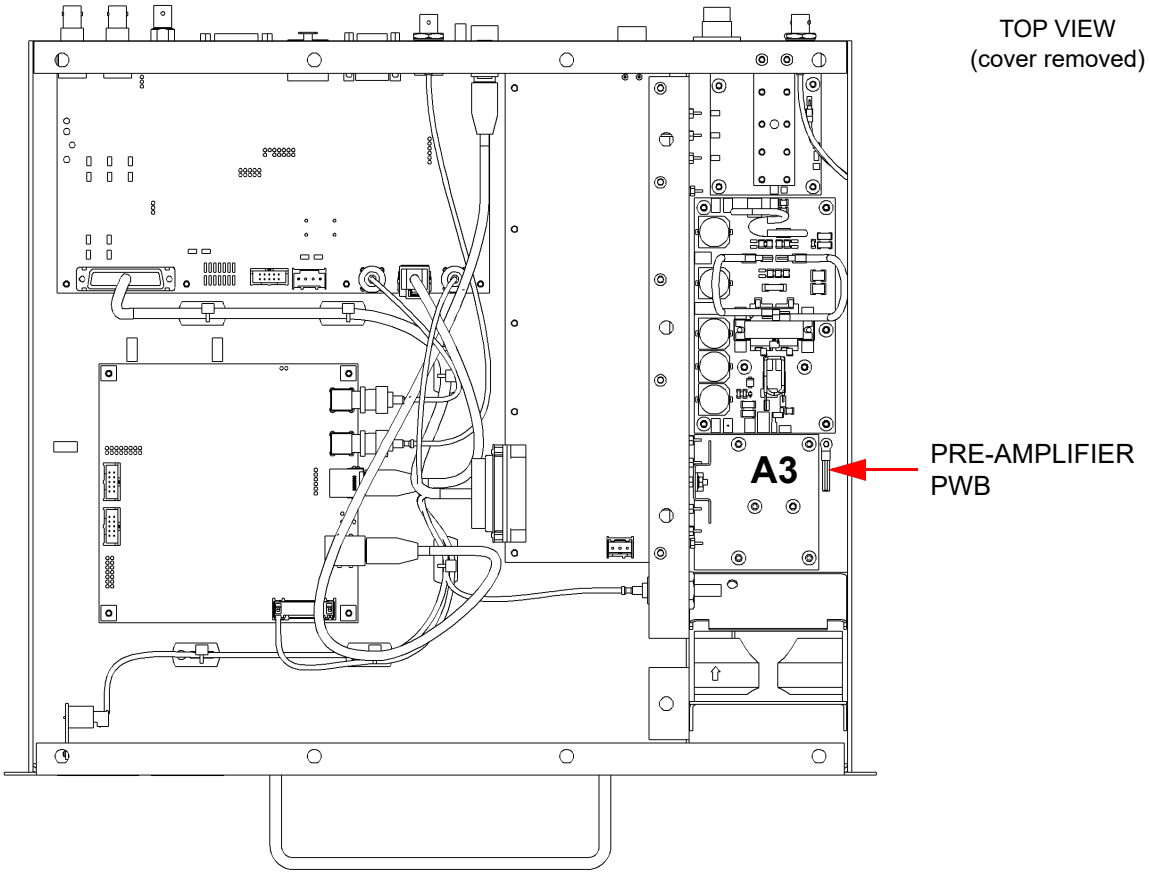

1. Remove the exciter module (A5) as described in "Exciter Replacement" on page 4.1.68.
2. Place the exciter module on a suitable work surface. Remove the top cover. Retain hardware.
3. Loosen the plastic nut that secures voltage regulator U1 to its heatsink (see Figure 4.1.34 on page 4.1.74). Remove and retain the plastic nut and washer.
4. Unsolder U1's three mounting leads from the pre-amplifier PWB and carefully pull it away from its heatsink. This should also allow you to remove the heatsink and insulator for U1. Retain U1, its heatsink and its insulator.
5. Unsolder and remove the four solder connections to the defective pre-amplifier PWB. They include three 20 AWG links (to pads B, C and D) and a coaxial connection (to pads A and E).

Figure 4.1.34: Pre-Amplifier PWB Assembly Detail

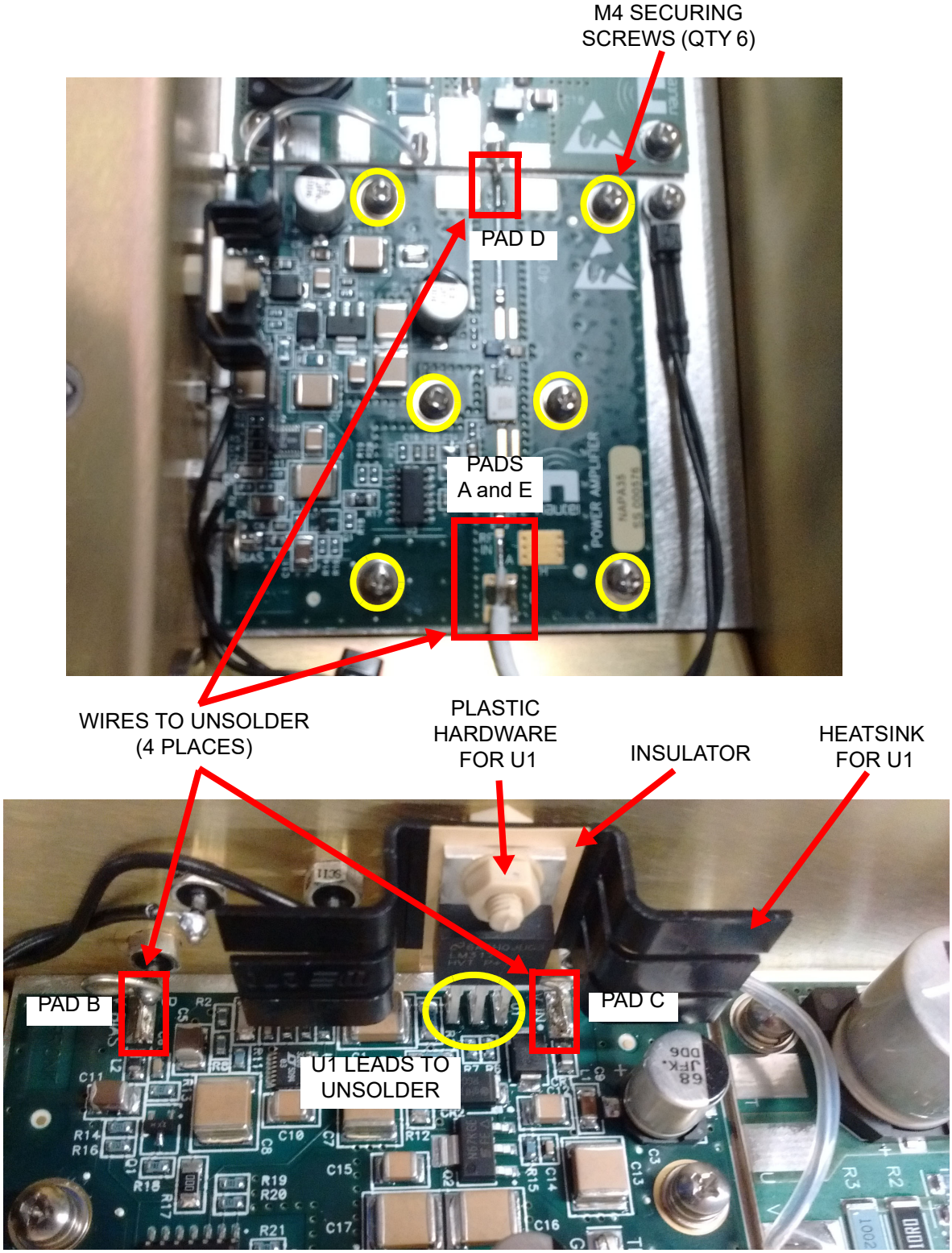

6. Remove the six M3 screws securing the pre-amplifier PWB to the heat sink. Carefully remove the pre-amplifier PWB from the exciter, taking care not to damage any of the links and wiring close to the PWB.

7. Obtain the replacement NAPA35 pre-amplifier PWB from the station spares kit, if purchased.

NOTE: FETs are static sensitive and must be handled in a static protected manner.

8. Spread a small amount of thermal compound (Nautel Part # HAG39, from the station spares kit), thinly and evenly, on the bottom of the new pre-amplifier PWB.

9. Secure the pre-amplifier PWB on the exciter's heat sink using the six screws removed in Step 6. Ensure correct orientation. Tighten the screws.

10. Re-solder the four connections removed in Step 5.

11. Re-install voltage regulator U1, its insulator and its heatsink on the plastic screw (see Figure 4.1.34 on page 4.1.74 for proper orientation). Ensure the leads of U1 are correctly positioned to allow re-soldering to the three pads on the pre-amplifier PWB. Secure the items using the nut and washer removed in Step 3 and torque hardware to 2 inch-pounds (0.22 Newton-meters).

12. Re-solder the three leads of U1 to the pre-amplifier PWB.

13. Re-install the exciter module's top cover, using retained hardware, and re-install the exciter module in the transmitter as described in "Exciter Replacement" on page 4.1.68.

Module Control/Interface PWB Replacement

Using Figure 4.1.35 as a guide, replace the module control/interface PWB (A3) as follows:

Figure 4.1.35: Module Control/Interface PWB Location

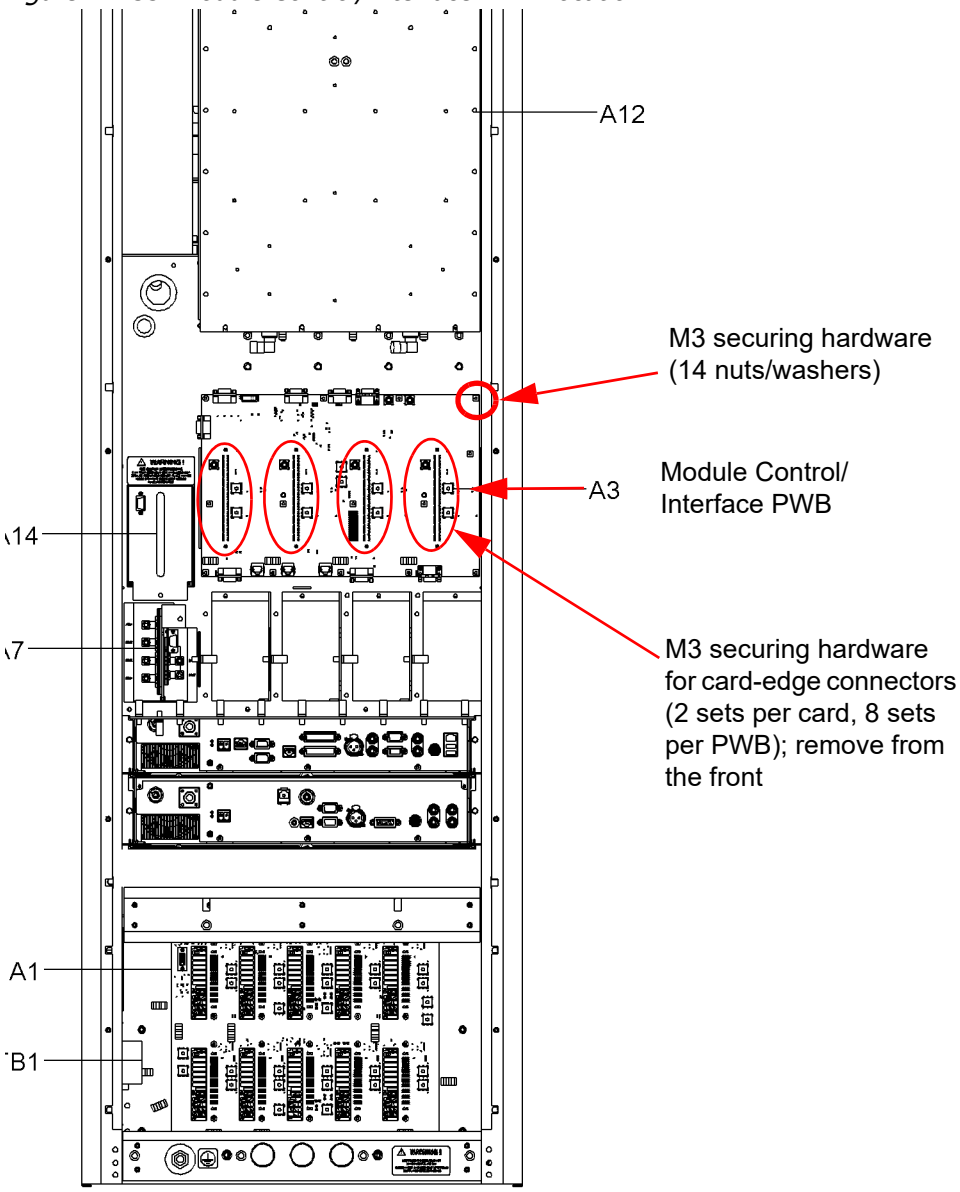

PARTIAL REAR VIEW
(panels removed)

1. Turn off (disable) and lock out the transmitter's ac power source, and UPS source (to LVPS), if applicable.
2. Remove the transmitter's upper, rear panel and open the front door.
3. From the front of the transmitter, remove the RF power modules that are mated with the module control/interface PWB.
4. Disconnect the mating connectors from the module control/interface PWB.
5. Remove 14 sets of M3 nuts and washers that secure the module control/interface PWB to the transmitter. Remove eight M3 screws that connect the PWB's edge-card connectors to the transmitter. Pull out the module control/interface PWB.
6. Obtain a replacement module control/interface PWB (Nautel Part # NAPC158B) and install it by reversing the instructions in Step 1 through Step 5.
7. From the rear of the transmitter, set DIP switch S1 on the NAPC158B as follows:

S1 Position	A3S1 Setting
6	OFF (right)
5 (F BTLDR)	OFF (right)
4 (RS485 TERM)	ON (left)
3 (ADDR 1)	OFF (right)
2 (ADDR 2)	OFF (right)
1	OFF (right)

8. Re-install the RF power modules.
9. Enable and turn on ac power to the transmitter.
10. Ensure new PWB has the same software as the original, and if necessary, perform a software upgrade. Refer to the Operations and Maintenance manual for instructions.
11. The calibration data for the NAPC158B PWB must be synced from the controller. To sync the cal data, navigate the UI menu as follows:
    - System Settings -> Factory Settings -> Calibration -> Cal Backup -> Sync Cal -> Send Cal to Racks
12. Return the transmitter to service.

Power Supply Interface PWB Replacement

Using Figure 4.1.36 as a guide, replace the power supply interface PWB (A1) as follows:

Figure 4.1.36: Power Supply Interface PWB Location

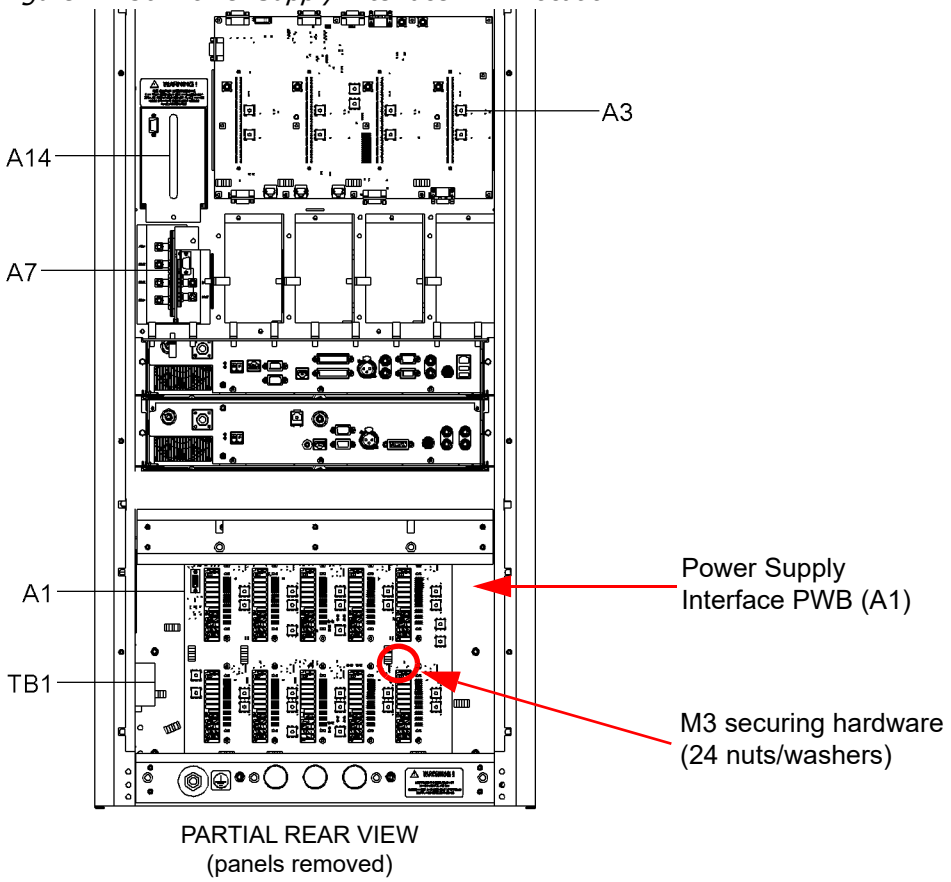

1. Turn off and lock out the transmitter's main ac power, and UPS source (to LVPS modules), if applicable.
2. Remove the transmitter's lower, rear panel and open the front door.
3. From the front of the transmitter, pull the power supply modules that are mated with the power supply interface PWB forward so that they disengage from the PWB.
4. From the rear of the transmitter, disconnect the mating connectors and wiring from the power supply interface PWB. Record the placement of all wiring and jumpers to ensure the replacement PWB connections are identical.

5. Remove 24 sets of M3 nuts and washers that secure the power supply interface PWB to the transmitter and pull out the power supply interface PWB.
6. Obtain a replacement power supply interface PWB (Nautel Part # NAPI150A/01) and install it by reversing the instructions in Step 1 through Step 5.
7. Re-install the power supply modules.
8. Enable and turn on ac power to the transmitter.
9. Return the transmitter to service.

UPS Interface Power Supply Replacement

See Figure 4.1.37 on page 4.1.80.

1. Turn off and lock out the transmitter's main ac power.
2. Remove the rear top panel, which is secured with 1/4-turn fasteners.
3. From the rear of the transmitter:
   - Disconnect the power cable to the UPS Interface assembly by removing the 220 V ac plug (Nautel Part # JD43) from the UPS Interface assembly at J1.
   - Remove the six M4 screws that secure the UPS Interface to the transmitter and retain. Disconnect the wiring from the terminal block on the defective power supply (Nautel part # UG31), noting connections.
   - Remove the UPS Interface assembly from the transmitter to gain access to the four M4 screws that secure power supply from underneath. Remove the four M4 screws and retain.

4. Obtain the replacement power supply (Nautel Part # UG31) and install in the UPS assembly using the four M4 screws retained in step 3. Apply ac power to the UPS interface only. Use a DMM to monitor the dc voltage between the +V and -V terminals of the UG31. Adjust the power supply output voltage potentiometer until the DMM reads 30 V dc.

   CAUTION! There are high voltages present. It is recommended to use a shrouded adjustment tool to avoid shorting the ac voltage to the chassis.

5. Install the UPS Interface assembly in the transmitter by reversing the instructions in steps 2 and step 3.

6. Enable and turn on ac power to the transmitter.

7. Return the transmitter to service.

Figure 4.1.37: UPS Interface Assembly

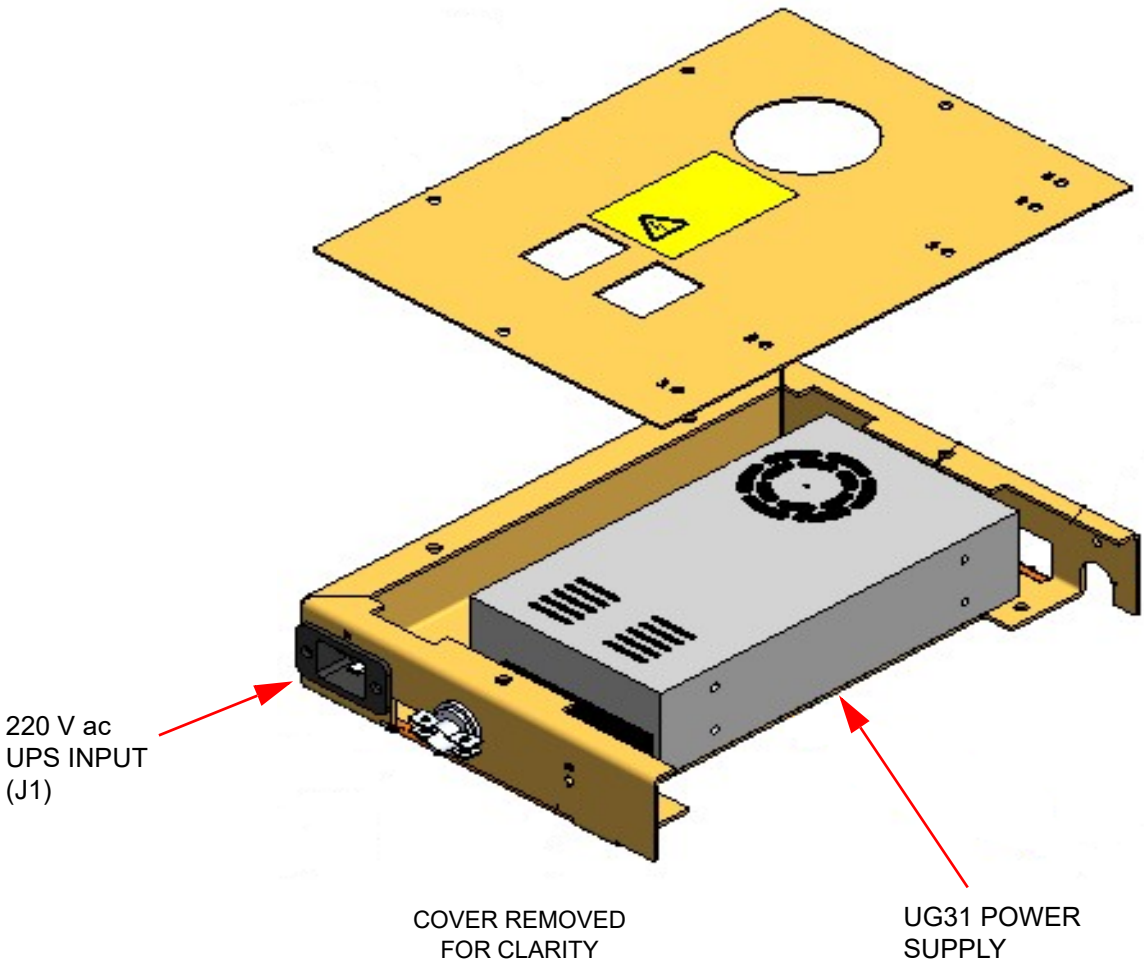

Power Module Combiner PWB (NAPH06) Replacement

1. Disable the associated NAA61 RF power module using the "Enable/Disable" switch located on the front of the RF power module (switch down). The power module status LED should turn red.
2. Remove the two (2) M5 Phillips screws securing the RF power module to the transmitter rack and retain hardware.

> **NOTE:** *If unable to remove the power module, ensure the M8 shipping bolt in the rear of the module has been removed.*

3. Remove the RF power module from the transmitter rack and place on a suitable work bench. See Figure 4.1.38 for proper orientation on work bench for top cover removal.

Figure 4.1.38: RF Power Module Orientation

4. Remove the top cover (11 x M3 Phillips screws) and retain hardware.

> **WARNING** *Resistors R1 through R6 (Nautel part # RT69) contains Beryllium Oxide (BeO). These devices are non-hazardous during normal device operation and under normal device failure conditions. DO NOT cut, crush or grind devices because the resulting dust may be HAZARDOUS IF INHALED. Unserviceable devices should be disposed of as harmful waste.*

5. Using a standard soldering iron, remove the high-power resistors (R1 through R6; Nautel Part # RT69) by first unsoldering their leads from the PWB traces (both sides) and then removing the resistor securing screws (2 M3 Phillips screws per resistor); retain hardware. See Figure 4.1.39 on page 4.1.82.
6. Using the standard iron, Unsolder the power amplifier output links from both the combiner PWB input (pads F and G) and the power amplifier (PA) PWB outputs; retain links.

Figure 4.1.39: NAPH06 Combiner PWB De-soldering locations

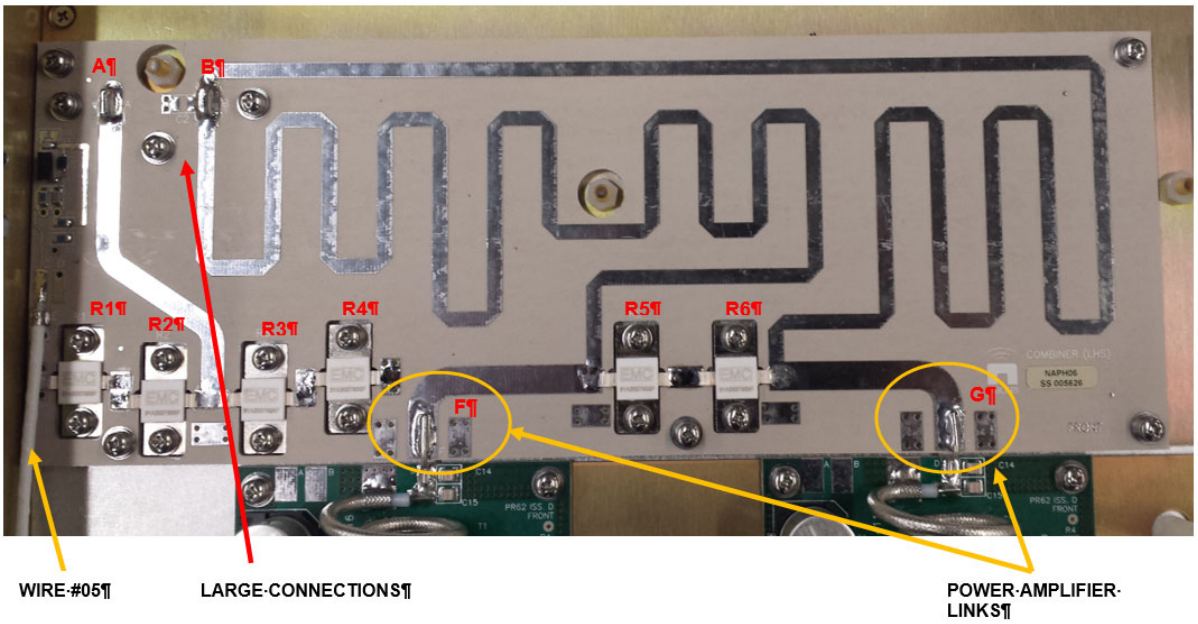

7. Using the standard iron, unsolder wire #05 (white coaxial cable marked with "-05") reject power sample coaxial cable core from pad C and shield from pad E. Tie back cable temporarily.
8. Unsolder the larger combiner connections (two places, spades A and B) using a Weller SP80L (80 W) or equivalent soldering iron. Ensure combiner connections (copper straps) are cleaned in preparation for the replacement combiner PWB.
9. Remove eight (8) M3 Phillips screws that mount the combiner PWB; retain hardware.
10. Remove the combiner PWB (A6). Clean residual thermal paste from the heat sink surface where the high power resistors (R1 to R6) were mounted.
11. Install replacement combiner PWB and secure using eight (8) M3 Phillips screws retained in Step 9. Torque screws to 6 lb-in.
12. Solder larger connections (copper straps) at pads A and B, using the Weller SP80L (80 W) soldering iron or equivalent.

CAUTION: *Do not apply excessive solder; prevents overflow of solder down into the hybrid combiner region.*

13. Re-install the power amplifier output links between the combiner pads F and G and the PA outputs using the standard soldering iron. If links are damaged, use tinned copper wire (Nautel part # WF09) to make new links.

14. Apply a very thin and evenly distributed layer of thermal paste (Nautel part # HAG39 to the bottom of the high power resistors (Nautel Part # RT69). Install the resistors in the R1 through R6 position on the combiner PWB by first securing the two (2) M3 Phillips screws retained in Step 5 and torque to 6 lb-in.

15. Solder the high power resistor leads (both sides) to the associated combiner PWB pads using the standard iron.

> **CAUTION:** *Do not apply excessive solder; avoid solder wicking up the lead towards the resistor body, as the bend in the lead provides thermal strain relief.*

16. Solder wire #05 (reject power sample coaxial cable) core to pad C and shield to pad E using the standard iron.

> **CAUTION:** *Ensure there are no short circuits between the core and the shield; measure with DMM set to resistance and ensure greater than 40 k ohms.*

17. Install top cover using hardware retained in Step 4.

18. Return the NAA61 RF power module to the transmitter rack and secure in place using hardware retained in Step 2 and the M8 shipping bolt (if used). Enable the power module using the front "Enable/Disable"switch (switch up). The power module status LED should be green.

19. Return to normal operation and via the RF Module Meter Summary screen, ensure that the associated RF power module reject power meter is equal to the remaining power module's reject power meter readings (± 50 W).

Power Module Combiner PWB (PR82C) Replacement

1. Disable the associated NAA61 RF power module using the "Enable/Disable" switch located on the front of the RF power module (switch down). The power module status LED should turn red.
2. Remove the two (2) M5 Phillips screws securing the RF power module to the transmitter rack and retain hardware.

> **NOTE:** *If unable to remove the power module, ensure the M8 shipping bolt in the rear of the module has been removed.*

3. Remove the RF power module from the transmitter rack and place on a suitable work bench. See Figure 4.1.40 for proper orientation on work bench for top cover removal.

Figure 4.1.40: RF Power Module Orientation

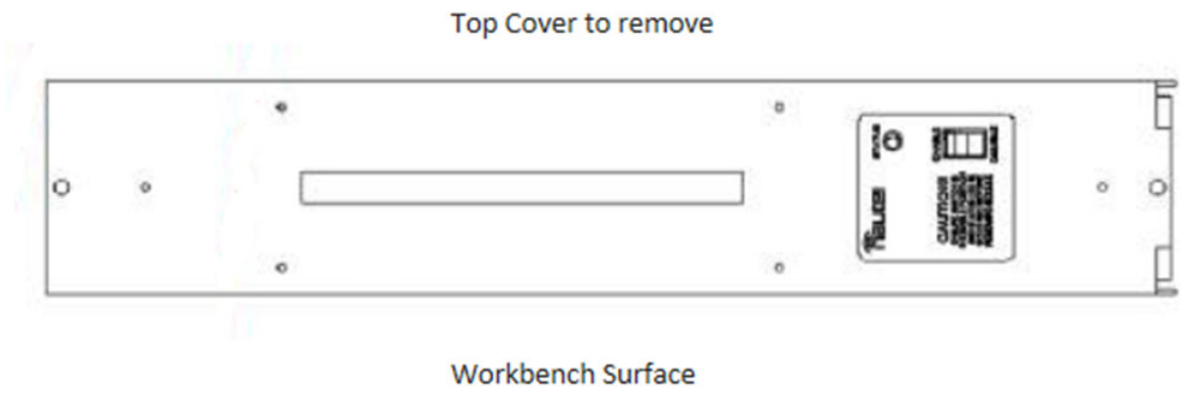

4. Remove the top cover (11 x M3 Phillips screws) and retain hardware.

> **WARNING** *Resistors R1 and R2 (Nautel part # RT69) contains Beryllium Oxide (BeO). These devices are non-hazardous during normal device operation and under normal device failure conditions. DO NOT cut, crush or grind devices because the resulting dust may be HAZARDOUS IF INHALED. Unserviceable devices should be disposed of as harmful waste.*

5. Using the standard soldering iron, remove the high-power resistors (R1 and R2; Nautel Part # RT69) by first unsoldering their leads from the PWB traces (both sides) and then removing the resistor securing screws (2 M3 Phillips screws per resistor); retain hardware. See Figure 4.1.41 on page 4.1.85.
6. Using the standard iron, Unsolder the power amplifier output links from both the combiner PWB input (pads D and E) and the power amplifier (PA) PWB outputs; retain links.

Figure 4.1.41: PR82C Combiner PWB De-soldering locations

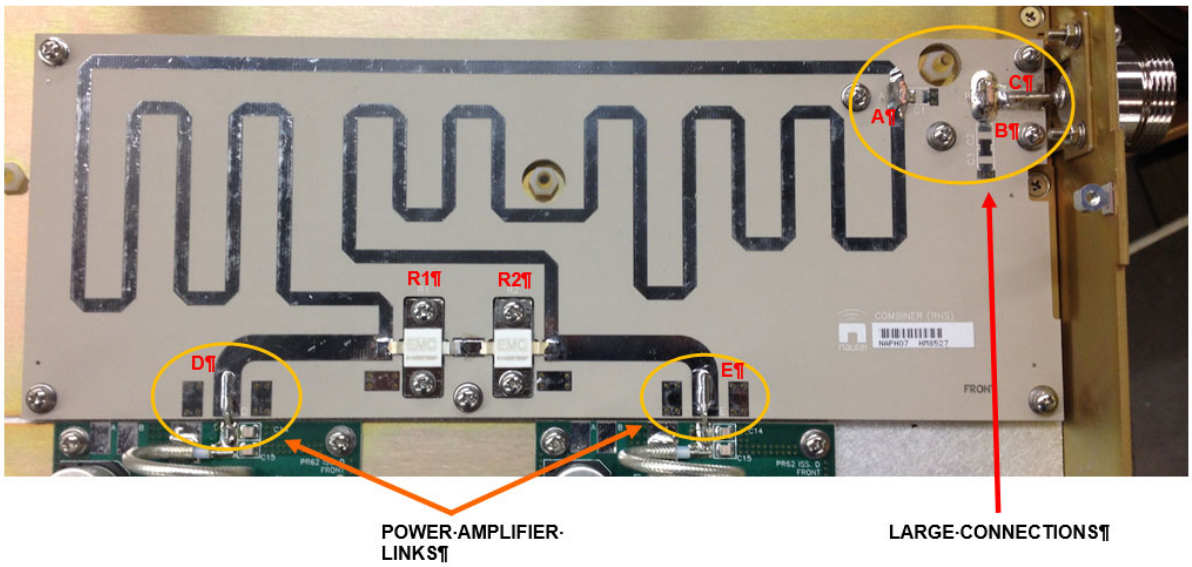

7. Unsolder the larger combiner connections (two places, spades A and B) and output connector link (pad C) using the Weller SP80L (80 W) or equivalent soldering iron. Ensure combiner and output connections (copper straps/link) are cleaned in preparation for the replacement combiner PWB.

8. Remove eight (8) M3 Phillips screws that mount the combiner PWB; retain hardware.

9. Remove the combiner PWB (A7). Clean residual thermal paste from the heat sink surface where the high power resistors (R1and R2) were mounted.

10. Install replacement combiner PWB and secure using eight (8) M3 Phillips screws retained in Step 8. Torque screws to 6 lb-in.

11. Solder larger connections (copper straps) at pads A and B and connector link at pad C, using the Weller SP80L (80 W) soldering iron or equivalent.

> **CAUTION:** *Do not apply excessive solder; prevents overflow of solder down into the hybrid combiner region.*

12. Re-install the power amplifier output links between the combiner pads D and E and the PA outputs using the standard soldering iron. If links are damaged, use tinned copper wire (Nautel part # WF09) to make new links.

13. Apply a very thin and evenly distributed layer of thermal paste (Nautel part # HAG39) to the bottom of the high power resistors (Nautel Part # RT69). Install the resistors in the R1 and R2 position on the combiner PWB by first securing the two (2) M3 Phillips screws retained in Step 5 and torque to 6 lb-in.

14. Solder the high power resistor leads (both sides) to the associated combiner PWB pads using the standard iron.

> **CAUTION:** *Do not apply excessive solder; avoid solder wicking up the lead towards the resistor body, as the bend in the lead provides thermal strain relief.*

15. Install top cover using hardware retained in Step 4.

16. Return the NAA61 RF power module to the transmitter rack and secure in place using hardware retained in Step 2 and the M8 shipping bolt (if used). Enable the power module using the front "Enable/Disable"switch (switch up). The power module status LED should be green.

17. Return to normal operation and via the RF Module Meter Summary screen, ensure that the associated RF power module reject power meter is equal to the remaining power module's reject power meter readings (± 50 W).

SECTION 4.2: PARTS LISTS

This section contains reference designation lists that provide descriptive and provisioning information for all electrical and mechanical parts that have an assigned reference designation and form a part of the subject equipment.

Topics in this section include

- Family Tree
- How to Locate Information About a Specific Part
- Column Content on page 4.2.2

Family Tree

Figure 4.2.1 on page 4.2.4 and Figure 4.2.2 on page 4.2.5 depict the family tree for the subject equipment. It is based on the descending order of the reference designation hierarchy and identifies all assemblies that have an assigned Nautel configuration control number.

How to Locate Information About a Specific Part

To locate the information for a specific part, the assigned reference designation for the part must be known. In addition, the Nautel nomenclature (e.g., NAA61C) assigned to the assembly containing the part or the full reference designation, including the reference designation of all higher assemblies, must be known.

When the Nautel Nomenclature is Known:

- Refer to the family tree (Figure 4.2.1 on page 4.2.4 and Figure 4.2.2 on page 4.2.5) and identify the block(s) associated with the Nautel nomenclature. Locate the part's reference designation in the identified reference designation list in this section, noting they are sorted alphanumerically.

When the Reference Designation is Known:

- Refer to the family tree depicted in Figure 4.2.1 on page 4.2.4 and Figure 4.2.2 on page 4.2.5 with the full reference designation.
- Follow the family tree branches to the block that represents the lowest level assembly assigned a Nautel configuration control number, then locate the reference designation information for that Nautel configuration control number.
- Locate the part's reference designation and associated Nautel Part # in the list provided at the end of this section. In a PDF manual, use Ctrl-F (find) to quickly locate the reference designation.

Reference Designation Lists

Reference designation lists are provided for:

- assemblies that are assigned an alpha-prefixed Nautel nomenclature (e.g., NAA61C)
- cable harnesses that are assigned a numbered Nautel part (e.g., 219-8401-01)
- optional kits that are assigned a numbered Nautel part

To obtain the full reference designation for a specific part the Nautel configuration control number must be located in the family tree (Figure 4.2.1 on page 4.2.4 and Figure 4.2.2 on page 4.2.5) to include the reference designation of all higher level assemblies. The reference designation lists are presented in alphanumeric order - for each component level of the transmitter - are divided into columns to aid in locating specific information.

Column Content

The following paragraphs provide an explanation of the purpose and contents of each column in the part number indexes.

Component Level, Stock Code Column

This column contains the *Component Level* number (01 through 10, as required) and the Nautel *Stock Code* (part number) assigned to each part.

Component Level

This number represents the level of a component in relation to the highest level parts list. In this case the highest level parts list is the GV5/GV3.5's overall parts list, or the top block in the family tree shown in Figure 4.2.1 on page 4.2.4.

Components that are directly descended from the highest level parts list are component level 01. The associated stock code and description for level 01 items appear in bold text in the reference designation list, followed by their sub-assembly components, as applicable. Level 01 items are sorted alphanumerically.

Components that are directly descended from component level 01 items are component level 02. The associated stock code and description for level 02 items appear below their associated level 01 component, slightly indented, followed by their sub-assembly components, as applicable. Level 02 items are sorted alphanumerically

Component level 03 through 10 items, as applicable, descend similarly to component level 02 items, with continuing indentations to identify each new level.

Stock Code

This number is Nautel's drawing number for Nautel manufactured parts, Nautel's configuration control number for assemblies that are under configuration control management, or Nautel's inventory management number for purchased parts. When a Nautel configuration control number (e.g., NAPC*) is shown in this column, its sub-assembly reference designation items are listed below it.

NOTE: *This section includes Nautel part numbers only. It does not include original equipment manufacturer (OEM) information (i.e., vendor part numbers). Some vendor information is provided in the Responding to Alarms section of this manual, otherwise contact Nautel to order a replacement part or to request assistance to find a suitable replacement.*

Description Column

The *Description* column contains the name and descriptive information for each part. The key word is presented first, followed by the adjective identifiers.

Reference Designation Column

The *Reference Designation* column contains the reference designation(s) for a specific part. When multiple reference designations apply to a part, they are sorted alphanumerically. These designations are assigned in accordance with the requirements of IPC-2612-2010 - Sectional Requirements for Electronic Diagramming Documentation (Schematic and Logic Descriptions).

Figure 4.2.1: GV5/GV3.5 Family Tree

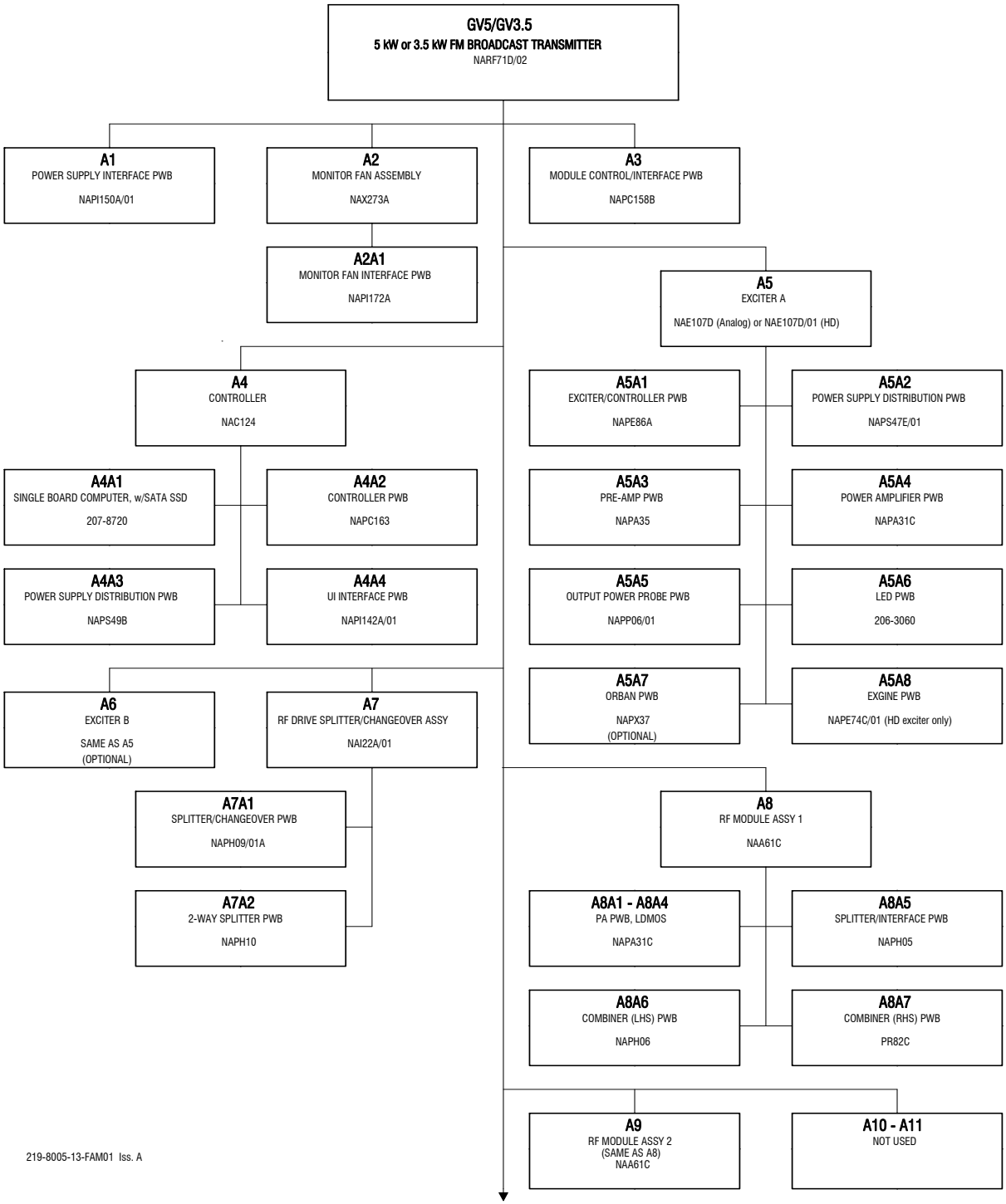

Figure 4.2.2: GV5/GV3.5 Family Tree (continued)

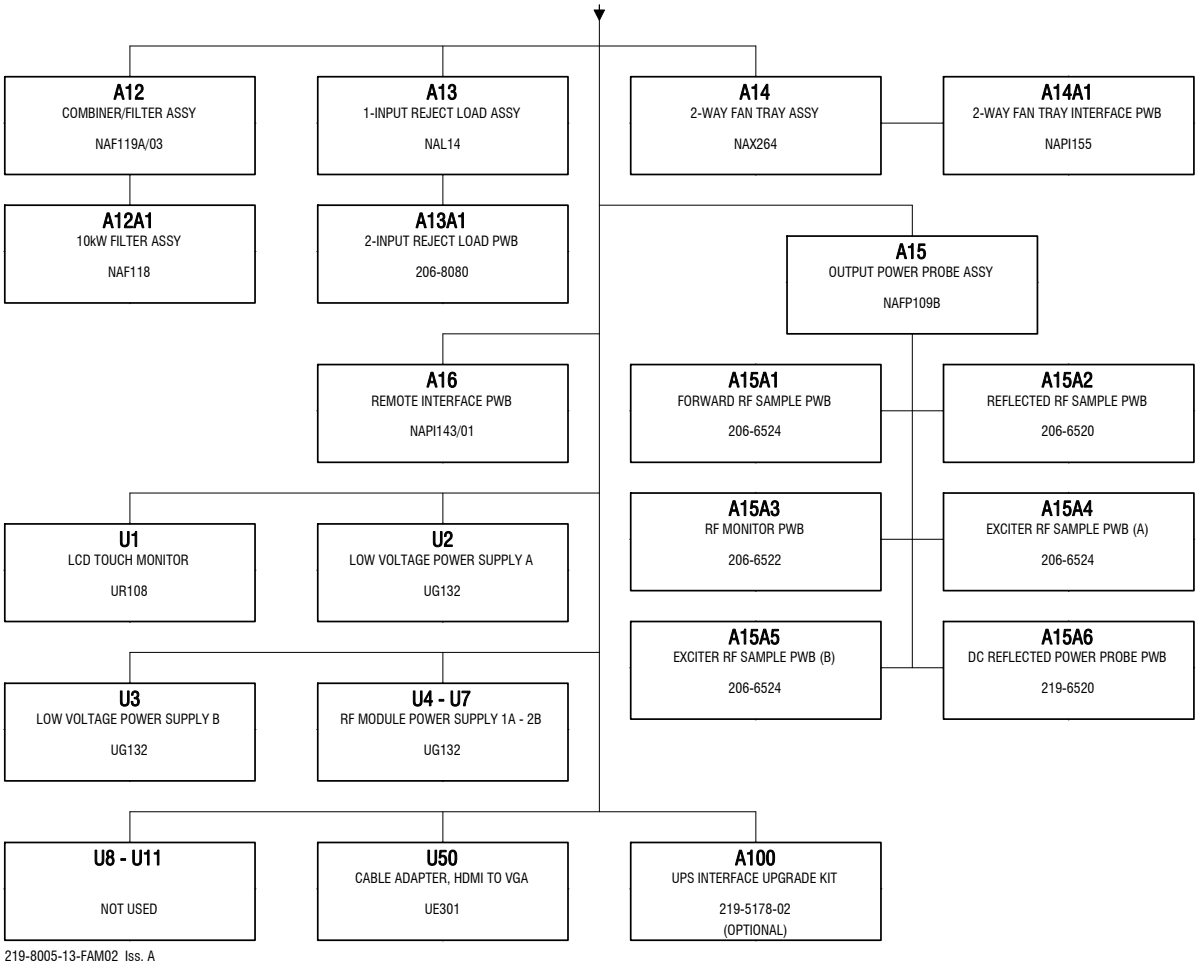

StockCode: NAC124
Description: Controller Assy, GV, w/UB118 SBC,

Component Lvl.	StockCode	Description	Reference Designation
01	**206-5914**	**Tyrap Anchor Assy**	
01	**207-8720**	**Generic ULT5 SBC Assy, w/SATA SSD**	A01
02	219-2160	RAM Kit	U03
02	UB118	Motherboard, EPIC, ULT, i5-8365UE, 1.6GHz, Quad Co	U01
01	**219-2131**	**SSD Mod, Programmed (UB118)**	U02
01	**219-2152**	**Cableset Assy, Controller GV, SATA SSD**	
02	JN61	Conn, 16 Pin, Dual Row Crimp	P02
02	JP59	Conn, Recept, Mini-Fit dual row, 4-pin	P05
02	JQ17	Conn, Contact, Pin, HDP-20 Strip	P01, P03, P08, P11
02	JQ18	Conn, Contact, Socket, HDP-20 Strip	P04
02	JQ49	Contact, Pin, 24-18 AWG, Mini-fit (Crimp)	P05
02	JR26	Conn, Plug, D-Sub, 15 pin	P03
02	JR28	Conn, Plug, D-Sub, 9 pin	P01, P08, P11
02	JR29	Conn, Socket, D-Sub, 15 pin	P04
02	JT16	Conn, Lock Screw, D-Sub, 4-40, Male, Kit	P01, P03, P04, P08, P11
02	JT242	Conn, Crimp, Contact, Socket, PicoBlade, 28-26AWG,	P10
02	JT243	Conn, Crimp, Contact, Socket, Milli-Grid, 28-22AWG	W04
02	JU128	Conn, Housing, Recept, PH Series, 4 pin, Single Ro	P09
02	JU129	Conn, Housing, Recept, Milli-Grid Series, 8 pin, D	W04
02	JU130	Conn, Housing, Recept, PicoBlade Series, 9 pin, Si	P10
02	JU58	Conn, Contact for Socket DF11, 22AWG	P02
02	JU63	Conn, 2mm, Housing 2, PH Serie s, White	P07
02	JU64	Conn, Term, PH Series, Crimp, 30-24 AWG	P07, P09
02	JU72	Conn, Housing, Dual Row, 8 pin , .100 Grid	P06, W04
02	JU73	Conn, Socket for JU72, 26-22 AWG, 15AU Crimp	P06, W04
02	UA257	Cable, 2ft, USB Panel Mt. to 4 Pin Header	W04

Component Lvl.	StockCode	Description	Reference Designation
02	UA258	Cable 2.5ft, D-Sub 15 HD, M/M	W03
02	UA312	Cable, SATA 7-pin + 2-pin wafer 2.0mm (PH 2.0)	W07
01	**NAPC163**	**Controller PWB Assy, GV Series**	A02
02	CCFS01	Cap,SMT,Ceramic,0.001uF,10%,50V,X7R,0603	C131
02	CCFS04	Cap,SMT,Ceramic,0.01uF,10%,50V,X7R,0603	C002, C006, C007, C009, C010, C018, C020, C022, C024, C026, C028, C030, C163, C165, C166, C167,, C169, C172, C173, C174, C180, C182, C183, C189, C190, C191, C192, C193
02	CCFS10	Cap,SMT,Ceramic,1uF,10%,25V,X7R,1206	C001, C066, C083, C085, C089, C168
02	CCFS23	Cap,SMT,Ceramic,18pF,2%,50V, C0G,0603	C067, C071, C086, C090, C101, C102
02	CCFS24	Cap,SMT,Ceramic,22pF,2%,50V, C0G,0603	C033, C035, C041, C044, C048, C054, C056, C058, C061, C070, C075, C080, C082, C088
02	CCFS32	Cap,SMT,Ceramic,100pF,2%,50V,C0G,0603	C004, C039, C068, C096
02	CCFS38	Cap,SMT,Ceramic,470pF,2%,50V, C0G,0603	C032, C034, C040, C043, C050, C053, C055, C057, C062, C069, C074, C079, C081, C087
02	CCFS52	Cap, SMT, Ceramic, 0.1uF, 10%, 25V X7R, 0603	C005, C008, C011, C013, C017, C019, C021, C023, C025, C027, C029, C031, C036, C038, C042, C045,, C046, C047, C049, C051, C052, C060, C063, C064, C065, C072, C073, C076, C077, C078, C091, C092,, C093, C094, C095, C097, C098, C099, C100, C103, C104, C105, C107, C108, C109, C110, C111, C112,, C113, C114, C115, C116, C117, C118, C119, C120, C121, C122, C123, C124, C125, C126, C127, C128,, C129, C130, C132, C133, C134, C135, C136, C137, C138, C139, C140, C141, C142, C143, C144, C145,, C146, C147, C148, C149, C150, C151, C152, C153, C154, C155, C156, C157, C158, C160, C161, C162,, C164, C170, C171, C175, C176, C177, C178, C179, C181, C184, C185, C186, C187, C188, C194
02	CCFS53	Cap, SMT, Ceramic,47uF,20%, 6.3V, 1210	C012, C014, C015, C016
02	CCFS57	Cap,SMT,Ceramic,10uF,20%,6.3V, X5R,0805	C084
02	CCFS60	Cap,SMT,Ceramic,1uF,10%,100V, X7R,1210	C003, C037
02	HAJ66	Terminal, SMT, Test Point, PWB	TP03, TP08, TP11, TP12
02	JF47	Conn, Header,Square Post,Gold, Dual,40-pin	J11, J12, J13, J14
02	JQ15	Conn, Post Shunt, 2 Pos, .10 C entreline	E01
02	JQ16	Conn, Header, SIP, 12 Pin Breakaway, 10 Ctr	J10, XE01

Component Lvl.	StockCode	Description	Reference Designation
02	JQ34	Conn, Socket, D-Sub, 9 pin, PW B Mt	J03, J04, J08
02	JS129	Conn, Socket, D-Sub, HD15pin, 90deg, PWB	J02
02	JS18	Conn, Plug, D-Sub, 15 pin, PWB Mt	J01
02	JT121	Conn, Dual, D-Sub, F/M, 9 pin, Rt. Angle, PWB	J06
02	JT77	Connector,Modular,Dual,RJ-45 Jack Rt Agl, PWB	J07
02	JT78	Connector,Dual,D-Sub,M/F, 25-pin,Rt Agl,PWB	J05
02	LCFS01	Inductor, SMT, Choke, 600ohms, 2A, 0805	L02, L03, L04, L08, L11, L17, L18, L24, L41, L42, L43, L46
02	LCFS02	Inductor, SMT, Choke, 2000 ohm s, 80mA, 0805	L01, L05, L06, L07, L09, L10, L12, L13, L14, L15, L16, L19, L20, L21, L22, L23, L26, L27, L29, L30,, L31, L32, L33, L34, L35, L37, L38, L39, L40, L44, L45, L48, L49, L50, L51, L52, L53, L56, L57, L60
02	LS22	Choke,SMT,Common Mode,2200 ohm ,200mA,1206	L25, L28, L47, L54, L55, L58
02	QBNS01	Transistor,SMT,NPN,Switch/Amp ,SOT-23	Q01, Q02, Q03, Q04, Q05, Q06, Q07, Q08
02	QDLS01	Diode, SMT, LED, Green, (560nm), 0603	DS01, DS02
02	QDLS07	Diode, SMT, LED, Amber, (592nm), 0603	DS03
02	QDRS01	Diode,SMT,Switching,250V,0.2A, SOD-323	CR01, CR03, CR04, CR05, CR06, CR07, CR08, CR09, CR10, CR11, CR12, CR13, CR14, CR15, CR16, CR21,, CR22, CR34, CR35
02	QR70	Suppressor, Transient Voltage, SMT 60V Clamp	CR17, CR18, CR19, CR23, CR24, CR25, CR26, CR27, CR28, CR29, CR30, CR31, CR32, CR33, CR36, CR37,, CR38, CR41, CR42, CR43
02	QS26	Transistor, SMT, P-Channel FET 130mA	Q09
02	RAD10	Resistor, SMT, MF, 56.2 Ohms, 1% 1/4W	R162, R166
02	RAD21	Resistor, SMT, MF, 475 Ohms, 1% 1/4W	R081, R093, R105, R109, R130, R131, R134, R139, R147, R159, R182, R193, R197, R223
02	RAD33	Resistor, SMT, MF, 4750 Ohms, 1%, 1/4W	R001, R004, R007, R012, R019, R020, R028, R035, R051, R062, R070, R078
02	RAD53	Resistor,SMT,MF,49.9ohms,1%, 1/10W,0603	R116
02	RAD75	Resistor, SMT, 2 Ohms, 5%, 1/4 W, 1206	R002, R097, R152
02	RAE34	Resistor,SMT,MF,49.9R,1%,1/10W 0603	R113, R118, R122, R125, R167, R168, R207, R213
02	RFFS01	Resistor,SMT,MF,0.0ohms,Jumper ,0603	R090, R096, R135, R136, R140, R143, R148, R151, R153, R154, R155, R158, R170, R172, R174, R184,, R185, R188, R189, R190, R199, R200, R201, R209, R210, R211, R227, R248, R258, R261, R262, R271
02	RFFS15	Resistor, SMT, MF, 12.1ohms, 1%, 1/10W, 0603	R030, R031, R034, R044, R046, R049, R059, R061, R063, R065, R068, R072, R075, R076, R079, R087

Component Lvl.	StockCode	Description	Reference Designation
02	RFFS18	Resistor, SMT, MF, 22.1ohms, 1%, 1/10W, 0603	R098, R112, R114, R115, R126, R142, R164, R165, R202, R206, R212, R218, R219, R222, R236, R241,, R263, R275
02	RFFS21	Resistor, SMT, MF, 39.2ohms, 1%, 1/10W, 0603	R274, R276
02	RFFS23	Resistor, SMT, MF, 56.2ohms, 1%, 1/10W, 0603	R149, R150
02	RFFS26	Resistor, SMT, MF, 100ohms, 1%, 1/10W, 0603	R106, R117, R121, R132, R157, R187, R224, R225, R245, R246, R249
02	RFFS28	Resistor, SMT, MF, 150ohms, 1%, 1/10W, 0603	R022, R183
02	RFFS29	Resistor,SMT,MF,182ohms,1%, 1/10W,0603	R217, R231
02	RFFS30	Resistor, SMT, MF, 221ohms, 1%, 1/10W, 0603	R110, R124
02	RFFS33	Resistor, SMT, MF, 392ohms, 1%, 1/10W, 0603	R023
02	RFFS34	Resistor,SMT,MF,475ohms,1%, 1/10W,0603	R043, R160, R171, R216, R220, R226, R234
02	RFFS37	Resistor, SMT, MF, 825ohms, 1%, 1/10W, 0603	R058
02	RFFS38	Resistor,SMT,MF,1000ohms,1%, 1/10W,0603	R037, R039, R041, R042, R052, R053, R054, R055, R056, R083, R085, R091, R102, R103, R128, R129,, R194, R229, R237, R242, R243, R247
02	RFFS40	Resistor,SMT,MF,1500ohms,1%, 1/10W,0603	R232, R235
02	RFFS42	Resistor,SMT,MF,2210ohms,1%, 1/10W,0603	R009, R040, R141, R144
02	RFFS44	Resistor,SMT,MF,3320ohms,1%, 1/10W,0603	R138, R146, R156, R161, R169, R175, R176, R177, R178, R179, R181, R230
02	RFFS46	Resistor, SMT, MF, 4750ohms, 1%, 1/10W, 0603	R038, R050, R066, R069, R080, R084, R086, R088, R092, R094, R101, R104, R120, R127, R163, R191
02	RFFS50	Resistor,SMT,MF,10.0Kohms,1%, 1/10W,0603	R003, R005, R006, R008, R010, R011, R013, R014, R017, R018, R021, R024, R025, R026, R027, R032,, R036, R045, R048, R057, R060, R064, R067, R073, R077, R082, R089, R095, R099, R100, R107, R108,, R111, R119, R123, R133, R137, R145, R173, R180, R186, R192, R198, R203, R208, R214, R215, R238,, R244, R250, R251, R254, R260
02	RFFS51	Resistor,SMT,MF,12.1Kohms,1%, 1/10W,0603	R239
02	RFFS52	Resistor,SMT,MF,15.0Kohms,1%, 1/10W,0603	R240
02	RFFS54	Resistor,SMT,MF,22.1Kohms,1%, 1/10W,0603	R015
02	RFFS57	Resistor,SMT,MF,39.2Kohms,1%, 1/10W,0603	R259
02	RFFS62	Resistor,SMT,MF,100Kohms,1%, 1/10W,0603	R253, R264, R265
02	RFFS66	Resistor, SMT, MF, 221Kohms, 1%, 1/10W, 0603	R016
02	RFFS74	Resistor,SMT,MF,1.00Mohms,1%, 1/10W,0603	R221
02	RFFS88	Resistor, SMT, MF, 10.0Mohms, 1%, 1/10W, 0603	R252
02	RT17	Thermistor, PTC, .15-.25 Ohms, 50V Max, 1.1A Hold,	RT03
02	RX64	Thermistor, PTC, SMT, 2920, 0.35-1.4 Ohm, 50V Max,	RT01, RT02

Component Lvl.	StockCode	Description	Reference Designation
02	SA60	Switch,SMt,Mom.,1PSTNO	S01
02	SD72	Switch, Right Angle, PCB, Mome ntary PB -40C, +85C	S02
02	TZ88	Transformer,SMT,50 ohms,0.03 to 125MHz	T01, T02
02	UC77	IC, Temp, Sensor, 3.3V, 1-Wire MSOP-8	U25
02	UDLS03	IC,SMT,CMOS,Hex Schm,Trig,Inv, SOIC-14	U32
02	UDLS04	IC,SMT,CMOS,8-Bit Shft Reg,Par I/P, SOIC-16	U10
02	UDOS01	IC,SMT,Dual Optocoupler,SOIC-8	U01, U05, U06, U07, U11, U15
02	UDTS04	IC,SMT,RS-485 Transceiver,3.3V ,SO-8	U29
02	UDTS05	IC, SMT, RS-232 Transceiver, 3.3V, SO-16	U41, U42
02	UDTS07	IC, SMT, Full Duplex RS485 RxTx, SOIC-8	U22, U27, U33
02	ULAS02	IC,SMT,Opamp,Quad,Rail-To-Rail ,SOIC-14	U19, U34
02	UMDS01	IC,SMT,DAC,8-Bit,4-ch,SPI, SOIC-14	U18
02	US08	IC, SMT, Blackfin DSP, 500MHz, bga-316	U39
02	US09	IC, SMT, Battery Backup,SOIC-8	U47
02	US13	IC, SMT, SDRAM, 16Mx16, 3.3V, TSOP-54	U31
02	US23	IC, SMT, Power Shift Register, SOIC-16	U08, U14
02	US25	IC, SMT, ADC, 11-ch, 10-bit, 3.3V, SPI, SSOP-20	U13
02	US30	IC, SMT, CMOS, Quad And Gate, SOIC-14	U24
02	US31	IC, SMT, CMOS, Quad Tri-State Buff, SOIC-14	U23
02	US41	IC, SMT, CMOS, Quad XOR Gate SOIC-14	U20
02	UT100	Oscillator, SMT, 25MHz, 50ppm, 3.3V	Y03
02	UT110	IC, Voltage Regulator, 1.5A, ADJ, Low Drop	U02, U03, U04
02	UT129	IC, USB Stereo Audio DAC, SSOP28	U38
02	UW110	Res, SMT Network, 0402x8, 4.7K , 5%	U09
02	UW114	IC, SMT, Dual SPI UART, 3.3V	U26
02	UW125	IC, SMT, SPI Flash, 32Mbit, SOIC8W	U16
02	UW63	Res,SMT Network,0402x8,39R	U35, U36, U37, U40, U43, U44, U46
02	UW80	IC,SMT,SRC,Async,2-ch,TQFP-48	U28
02	UW90	IC,SMT,Quad 2 TO 1 DATA Sel/ Mux 3 States Output,3	U21
02	UW91	IC,SMT,SPI UART,3.3V	U17
02	UX124	IC, SMT, CPLD, 3.3V, 144 Macro cell, 100-TQFP	U30
02	UX64	IC,SMT,Power Supervisor,Dual I/P,33/1.5V,MSOP	U45
02	UX83	IC,SMT,2.5V Reference,0.1%,SOT -23-6	U12
02	XFPS08	Crystal, SMT, Fund, 12MHz, -40C to +85C	Y02

Component Lvl.	StockCode	Description	Reference Designation
02	XFPS10	Crystal,SMT,Fund,ParRes,32.768 kHz, 20ppm, 12.5pF,	Y04
02	XFPS18	Crystal, SMT, Fund, Par Res, 14.7456MHz, 30ppm, 18	Y01
01	**NAPI142A/01**	**UI Interface PWB Assy (GV)**	A04
02	CCFS04	Cap,SMT,Ceramic,0.01uF,10%,50V,X7R,0603	C22
02	CCFS09	Cap,SMT,Ceramic,0.47uF,10%,25V,X7R,0805	C19, C20
02	CCFS24	Cap,SMT,Ceramic,22pF,2%,50V, C0G,0603	C01, C03, C04, C05, C06, C25
02	CCFS32	Cap,SMT,Ceramic,100pF,2%,50V,C0G,0603	C02, C21
02	CCFS38	Cap,SMT,Ceramic,470pF,2%,50V, C0G,0603	C07, C09, C10, C11, C12, C23
02	CCFS52	Cap, SMT, Ceramic, 0.1uF, 10%, 25V X7R, 0603	C13, C14, C15, C16, C17
02	CCFS60	Cap,SMT,Ceramic,1uF,10%,100V, X7R,1210	C08, C24
02	CCFS62	Cap, SMT, Ceramic, 10uF, 10%, 25V	C18
02	HAJ66	Terminal, SMT, Test Point, PWB	TP01
02	JS130	Conn, Socket, D-Sub, HD 15pin, Straight, PWB	J01
02	JS50	Conn, Socket, D-Sub, 9-Pin, Vertical PWB	J02
02	LCFS01	Inductor, SMT, Choke, 600ohms, 2A, 0805	L02, L08, L16, L17
02	LCFS02	Inductor, SMT, Choke, 2000 ohm s, 80mA, 0805	L01, L03, L04, L05, L06, L07, L09, L10, L11, L12, L15, L18
02	LS22	Choke,SMT,Common Mode,2200 ohm ,200mA,1206	L13, L14
02	QK14	Diode, LED, Amber	DS01, DS02, DS03, DS04
02	QR70	Suppressor, Transient Voltage, SMT 60V Clamp	CR01, CR02, CR03, CR04, CR05, CR06, CR07, CR08, CR09
02	RAD19	Resistor, SMT, MF, 332 Ohms, 1% 1/4W	R07, R08, R13, R23
02	RAD21	Resistor, SMT, MF, 475 Ohms, 1% 1/4W	R01, R02, R03, R04, R05, R17, R18, R24
02	RAD75	Resistor, SMT, 2 Ohms, 5%, 1/4 W, 1206	R06, R25
02	RAE34	Resistor,SMT,MF,49.9R,1%,1/10W 0603	R10, R11, R15, R16
02	RFFS01	Resistor,SMT,MF,0.0ohms,Jumper ,0603	R14, R20, R21, R22
02	RFFS50	Resistor,SMT,MF,10.0Kohms,1%, 1/10W,0603	R09, R12, R19
02	SA70	Switch, MOM, SPDT, PB, Black, No LED	S01, S03
02	SA71	Switch, MOM, SPDT, PB, RED No LED	S02
02	UDTS03	IC,SMT,RS-485 Transceiver,Sgl ,SOIC-8	U01, U02
02	UG35	IC, CMOS, Hex Schmitt, Trigger Inverter, SOIC-14	U03
02	UT130	IC, SMT, Voltage Regulator,5V, 1.5A, 150C, D2PAK	U04

Component Lvl. StockCode	Description	Reference Designation
01 **NAPS49B**	**Power Supply Distribution PWB Assy, GV**	A03
02 BBHT04	Battery Holder, SMT, 20mm Coin Cell	XBT01
02 BBLT01	Battery, Lithium, 3V,20mm Coin Cell	BT01
02 CCFS04	Cap,SMT,Ceramic,0.01uF,10%,50V,X7R,0603	C34, C61
02 CCFS05	Cap,SMT,Ceramic,0.022uF,10%,50 V,X7R,0603	C38, C40, C43, C56, C58
02 CCFS32	Cap,SMT,Ceramic,100pF,2%,50V,C0G,0603	C06
02 CCFS34	Cap,SMT,Ceramic,220pF,2%,50V, C0G,0603	C19, C21, C22
02 CCFS36	Cap,SMT,Ceramic,330pF,2%,50V, C0G,0603	C49, C51, C53
02 CCFS42	Cap,SMT,Ceramic,1000pF,2%,50V, C0G,0805	C20
02 CCFS52	Cap, SMT, Ceramic, 0.1uF, 10%, 25V X7R, 0603	C23, C24, C25, C26, C28, C29, C32, C35, C36, C37, C39, C41, C42, C50, C52, C54, C55, C60
02 CCFS53	Cap, SMT, Ceramic,47uF,20%, 6.3V, 1210	C10, C14
02 CCFS61	Cap,SMT,Ceramic,0.001uF,10%, 100V,X7R,0805	C17, C47, C48
02 CCFS72	Cap, SMT, Ceramic, 10uF, 10%, X7R, 50V, 2220	C02, C08, C12
02 CT50	Capacitor,SMT,Ceramic,0.01uF, 100V,10%	C11
02 CT51	Capacitor,SMT,Ceramic,0.1uF, 100V,10%	C15, C33, C45, C46, C66
02 CT57	Capacitor, SMT, Al Electroytic 330uF, 25VDC,ESR 0.	C03, C04, C07
02 CT64	Capacitor, SMT, Ceramic, 2.2uF 10%, 100V, X7R, 181	C09, C16, C44, C57, C59, C62, C63, C64, C65
02 CT75	Cap, SMT, Electrolytic, 470uF, 20%, 63VDC, Low ESR	C18, C30
02 CT84	Cap, SMT, Electrolytic, 68uF, 63V, +/- 20%	C31
02 CTFS02	Cap,SMT,Tantalum,1uF,10%,35V, 1411	C05
02 FA69	Fuse, SMT, Fuse Block, 10A, Very Fast Acting, Inst	F01
02 HAJ66	Terminal, SMT, Test Point, PWB	TP01, TP02, TP03, TP04, TP05, TP06, TP07, TP08, TP09
02 JR51	Terminal Block,2-pos,PWB Mount	J02
02 JS19	Conn, Socket, D-Sub, 15 pin, P WB Mt	J04
02 JT148	Connector, Header, 2 pos, 90 deg, PWB,20A, 600V, 7	J01
02 JU60	MTA, Keyed Square Post Header Assy, 3 pin	J03
02 LA44	Inductor, Choke, Toroid, 10uH, 10A	L03
02 LCFS01	Inductor, SMT, Choke, 600ohms, 2A, 0805	L16, L20
02 LCFS02	Inductor, SMT, Choke, 2000 ohm s, 80mA, 0805	L11, L13, L14, L17, L18, L19
02 LCFS03	Inductor, SMT, Choke, 600ohms, 2.5A, 1206	L01, L02, L08, L10, L21, L22
02 LCFS05	Bead, Ferrite, SMT, 120 ohms @ 100MHz, 6A, 1812	L07, L09
02 LS45	Inductor, SMT, Shielded, 33uH, 3.3A RMS	L04, L05, L06
02 LS46	Choke. Common Mode, 170ohms @100MHz. 20A	L15

Component Lvl.	StockCode	Description	Reference Designation
02	QBNS01	Transistor,SMT,NPN,Switch/Amp ,SOT-23	Q02
02	QDLS01	Diode, SMT, LED, Green, (560nm), 0603	DS02, DS03, DS04, DS05
02	QDRS01	Diode,SMT,Switching,250V,0.2A, SOD-323	CR01
02	QDS02	Diode, SMT, Schottky, 3.5Ax2, 100V DPAK	U02, U03, U05
02	QM66	LED, Bi-Level, PWB Mount, Thru -hole, Green/Green	DS01
02	QN53	Transistor,SMT,MOSFET,N-Channe l,60V,115mA,SOT-23	Q03, Q04, Q05
02	QR71	Transistor, FET, P-channel, D2Pak	Q01
02	RAD41	Resistor, SMT, MF, 22.1K Ohms, 1% 1/4W	R03
02	RAD48	Resistor, SMT, MF, 82.5K Ohms, 1% 1/4W	R07
02	RAD49Z	Resistor,SMT,MF,10ohms, 1%,2W	R16, R17, R19
02	RAD80	Resistor, SMT,10k Ohms, 1%, 1W 2512	R05, R06, R15, R18
02	RFFS01	Resistor,SMT,MF,0.0ohms,Jumper ,0603	R26, R27, R47
02	RFFS33	Resistor, SMT, MF, 392ohms, 1%, 1/10W, 0603	R13
02	RFFS38	Resistor,SMT,MF,1000ohms,1%, 1/10W,0603	R10, R11, R12, R23
02	RFFS39	Resistor,SMT,MF,1210ohms,1%, 1/10W,0603	R02, R20, R29, R32
02	RFFS40	Resistor,SMT,MF,1500ohms,1%, 1/10W,0603	R08
02	RFFS41	Resistor,SMT,MF,1820ohms,1%, 1/10W,0603	R35
02	RFFS44	Resistor,SMT,MF,3320ohms,1%, 1/10W,0603	R28, R33, R38
02	RFFS46	Resistor, SMT, MF, 4750ohms, 1%, 1/10W, 0603	R24, R25, R44
02	RFFS50	Resistor,SMT,MF,10.0Kohms,1%, 1/10W,0603	R01, R09, R14, R21, R22, R36, R40, R42, R48
02	RFFS52	Resistor,SMT,MF,15.0Kohms,1%, 1/10W,0603	R30, R31, R34, R37
02	RFFS53	Resistor,SMT,MF,18.2Kohms,1%, 1/10W,0603	R41, R43
02	RFFS57	Resistor,SMT,MF,39.2Kohms,1%, 1/10W,0603	R45
02	RFFS58	Resistor, SMT, MF, 47.5Kohms, 1%, 1/10W, 0603	R39
02	RFFS62	Resistor,SMT,MF,100Kohms,1%, 1/10W,0603	R04, R46
02	RX65	Thermister, PTC, SMT, 2920, 0.3-0.95 Ohm, 60V Max,	RT01
02	UA96	IC,SMT,CMOS,Dual D Flip-Flop, SO-14	U10
02	UDLS09	IC,SMT,CMOS,Hex Inverter,Unbuf f,SO-14	U04
02	UDSS02	IC,SMT,Microprocessor Supervisor 4.38V, SC70	U08
02	UP112	IC, SMT, Step Down Reg., 75V, 3A, TSSOP-20	U06, U07, U09
02	UW211	Power Supply, DC-DC, Isolated, 18-75Vin, 12Vout, 1	U01

01	**UW146**	**Display, 20x4 LCD, 3.3 - 5V, -20/+70**	U01

Component Lvl. StockCode	Description	Reference Designation
01 **ZAP50**	**Fan, 80mm, Brushless, 48Vdc, EMI Caps, Tach w/conn**	B01

END OF ITEM

Component Lvl. StockCode	Description	Reference Designation
01 **219-3104**	**Cable Set Assy, GV, Exgine**	
02 JDP24	Conn, Coax, BNC, Plug, 50ohm, Crimp	W6P1, W6P2
02 JP50	Conn, Recept, Ribbon Cable, 10 pin	W5P1, W5P2
02 UA73	Cable, Cat5e, 1', Molded	W03
02 UA74	Cable, Cat5e, 2', Booted	W04
01 **NAE107D**	**FM Digital Exciter Assy, NVLT/GV (Analog)**	
02 206-3060	LED PWB Assy	A06
03 CCFS07	Cap,SMT,Ceramic,0.1uF,10%,50V,X7R,0805	C01, C02, C03, C04
03 HR107	LED,Light Pipe,Optical,PWB, Right Angle	HW01, HW02
03 JU25	MTA, Keyed Square Post Header Assy, 4 pin	J01
03 LCFS01	Inductor, SMT, Choke, 600ohms, 2A, 0805	L01, L02, L03, L04
03 QDLS04	Diode,SMT,LED,Bicolor,Red/ Green,1210	DS01, DS02
03 RFFS30	Resistor, SMT, MF, 221ohms, 1%, 1/10W, 0603	R02, R03, R04
03 RFFS34	Resistor,SMT,MF,475ohms,1%, 1/10W,0603	R01
02 219-3102-01	Cableset Assy Exciter NVLT/GV (NAE107B)	
03 JDP24	Conn, Coax, BNC, Plug, 50ohm, Crimp	W1P1, W1P2, W2P1
03 JQ17	Conn, Contact, Pin, HDP-20 Strip	P01
03 JQ18	Conn, Contact, Socket, HDP-20 Strip	P02
03 JR38	Conn, Socket, D-Sub, HDP-20, 2 5 pin	P02
03 JR39	Conn, Plug, D-Sub, 25 pin, HDP -20	P01
03 JT16	Conn, Lock Screw, D-Sub, 4-40, Male, Kit	P01, P02
03 JT60	Conn, Coax, BNC, Recept, Bulkhead, RG188	J01, J03, W2J1
03 JU02	MTA, Standard Dust Cover, 4 pi n	P04
03 JU07	MTA, Standard Dust Cover, 8 pi n	P03
03 JU27	MTA, Keyed Closed End Housing, 4 pin,22AWG	P04
03 JU28	MTA, Keyed Closed End Housing, 8 pin,22AWG	P03
03 LA02	Toroid, Ferrite, 12.7mm, K Mtl	W1L1
02 CBP08	Capacitor, Feed-Thru, Ceramic, 1000pF	C01, C02, C03, C04, C05, C06, C07, C08, C09
02 JA76	Conn,Coupler,RJ45,Feed-Thru, Shielded	U01
02 JDP21	Conn, Coax, N, Recept, Panel, 50ohm	J02

Component Lvl.	StockCode	Description	Reference Designation
02	NAPA31C	PA PWB Assy, LDMOS (QAP66)	A04
03	CS94	Capacitor, SMT, Porcelain,36pF 500V, 2%	C18
03	CS95	Capacitor, SMT, Porcelain,15pF 500V, 2%	C15
03	CS96	Capacitor, SMT, Porcelain, 2pF 500V, +/-0.1pF	C14
03	CT52	Capacitor,SMT,Ceramic,470pF, 200V,10%	C17
03	CT53	Capacitor,SMT,Ceramic,0.001uF, 50V,10%	C08, C10, C12, C16
03	CT66	Capacitor, SMT, Ceramic, 0.1uF 10%, 100V	C06, C20
03	CT74	Cap, SMT, Ceramic, 10uF, X7R, 100V, Stacked	C21, C22
03	CT75	Cap, SMT, Electrolytic, 470uF, 20%, 63VDC, Low ESR	C01, C02, C03, C04, C05
03	CT79	Capacitor, SMT, Ceramic,0.01uF 50V, 10%	C11, C13
03	FA64	Fuse, SMT, 125VAC, VDC, 30A, Fast Acting	F01
03	LS26	Inductor, SMT, 82nH, 2%, 2.5A, 4.20mm H x 4.95mm	L05
03	LS40	Inductor, SMT, 5nH, 5%, Mini Spring	L01, L03
03	LS41	Inductor, SMT, 100nH, 5%, Midi Spring	L02
03	QAP66	Transistor, FET, LDMOS, Dual, Ruggedized	Q01
03	QDSS01	Diode, SMT, Schottky, 30V, 0.2A, SOD-323	CR01
03	QDZS01	Diode,SMT,Zener,5.1V,5%,3W,SMB	CR02
03	RAD45	Resistor, SMT, MF, 47.5K Ohms, 1% 1/4W	R01
03	RAD49Z	Resistor,SMT,MF,10ohms, 1%,2W	R02
03	RAD54Z	Resistor,SMT,4.7 ohms, 5%,2W	R04, R05
03	RAD80	Resistor, SMT,10k Ohms, 1%, 1W 2512	R03
03	TZ118	Transformer, Gate Drive, VHF, 3T/1 Turn	T03
03	WE54	Cable, Coax, 12 Ohm, 600V, 200 C, TFE	T02A, T02B
03	WE56	Cable, Coax, 50 Ohm, 70% VP, 150C, PTFE, 11mm Min	T01
02	NAPA35	PA PWB Assy, RFMD	A03
03	CCFS01	Cap,SMT,Ceramic,0.001uF,10%,50V,X7R,0603	C19
03	CCFS04	Cap,SMT,Ceramic,0.01uF,10%,50V,X7R,0603	C04, C06, C14, C20, C22
03	CCFS07	Cap,SMT,Ceramic,0.1uF,10%,50V,X7R,0805	C24
03	CCFS60	Cap,SMT,Ceramic,1uF,10%,100V, X7R,1210	C10, C12, C15
03	CCFS62	Cap, SMT, Ceramic, 10uF, 10%, 25V	C05, C11
03	CCFS66	Cap, SMT, Ceramic, 10+/-0.5pF, 100V COG, 1206	C02
03	CCFS72	Cap, SMT, Ceramic, 10uF, 10%, X7R, 50V, 2220	C01, C07, C08, C13, C16, C17
03	CCFS79	Cap, SMT, Ceramic, 2400 pF, 15%, 50V, X7R, 0805	C25, C26
03	CS113	Capacitor, SMT, Porcelain, 0.8pF, 150V, +/- 1%	C27

Component Lvl.	StockCode	Description	Reference Designation
03	CT66	Capacitor, SMT, Ceramic, 0.1uF 10%, 100V	C09
03	CT68	Cap, SMT, Electrolytic, 68uF, 20%, 63V	C03, C18
03	HAJ66	Terminal, SMT, Test Point, PWB	TP01
03	LCFS01	Inductor, SMT, Choke, 600ohms, 2A, 0805	L01
03	LCFS02	Inductor, SMT, Choke, 2000 ohm s, 80mA, 0805	L02
03	LS53	Inductor, SMT, 0.9uH, 5%, 1.3A , 1.91mm H, 2.92mm	L03
03	LS54	Inductor, SMT, 5.4 nH, 5%, 1.6A, 1.52mm, H 2.41mm	L04
03	QBNS01	Transistor,SMT,NPN,Switch/Amp ,SOT-23	Q01
03	QDRS02	Diode,SMT,Power,400V,1.5A,SMB	CR01, CR02
03	QS30	Transistor, SMT, MOSFET, P-Cha nnel, 60V, 1.8A, SO	Q02
03	RAD39	Resistor, SMT, MF, 15K Ohms, 1%, 1/4W	R01, R10, R12
03	RAD72	Resisitor, SMT, MF, 0.0 Ohms, Jumper, 1206	R17
03	RFFS01	Resistor,SMT,MF,0.0ohms,Jumper ,0603	R04, R05, R23
03	RFFS26	Resistor, SMT, MF, 100ohms, 1%, 1/10W, 0603	R21
03	RFFS27	Resistor, SMT, MF, 121ohms, 1%, 1/10W, 0603	R06, R07
03	RFFS38	Resistor,SMT,MF,1000ohms,1%, 1/10W,0603	R13, R14
03	RFFS40	Resistor,SMT,MF,1500ohms,1%, 1/10W,0603	R16
03	RFFS46	Resistor, SMT, MF, 4750ohms, 1%, 1/10W, 0603	R15
03	RFFS49	Resistor,SMT,MF,8250ohms,1%, 1/10W,0603	R11
03	RFFS50	Resistor,SMT,MF,10.0Kohms,1%, 1/10W,0603	R18, R19
03	RFFS52	Resistor,SMT,MF,15.0Kohms,1%, 1/10W,0603	R20
03	RFFS62	Resistor,SMT,MF,100Kohms,1%, 1/10W,0603	R02
03	RFFS70	Resistor, SMT, MF, 475Kohms, 1%, 1/10W, 0603	R08
03	ULAS02	IC,SMT,Opamp,Quad,Rail-To-Rail ,SOIC-14	U03
03	US46	IC, SMT, GaN Wband PA, 30M-512 MHz, 9W, 28V,19dB,	U04
03	UT138	IC SMT Low Noise, Inv CP, +/- LDO regulators,4.5-3	U02
02	NAPE86A	Exciter PWB Assy, (with Power Boost)	A01
03	206-5028	JMT01 Pin Mod	J14
03	BBHT01	Holder, 20mm Coin Cell, PWB Mt	XBT01
03	BBLT01	Battery, Lithium, 3V,20mm Coin Cell	BT01
03	CCFS01	Cap,SMT,Ceramic,0.001uF,10%,50V,X7R,0603	C034, C050, C053, C089, C096, C098, C139, C140, C141, C142, C143, C144, C157, C158, C159, C161,, C164, C166, C316, C319, C339
03	CCFS03	Cap,SMT,Ceramic,0.0047uF,10%, 50V,X7R,0603	C015, C020, C035, C038

Component Lvl.	StockCode	Description	Reference Designation
03	CCFS04	Cap,SMT,Ceramic,0.01uF,10%,50V,X7R,0603	C117, C129, C130
03	CCFS06	Cap, SMT, Ceramic, 0.047uF, 10%, 50V, X7R, 0603	C018, C036
03	CCFS10	Cap,SMT,Ceramic,1uF,10%,25V,X7R,1206	C113, C116, C118
03	CCFS23	Cap,SMT,Ceramic,18pF,2%,50V, C0G,0603	C031, C032, C039, C040, C234, C235
03	CCFS32	Cap,SMT,Ceramic,100pF,2%,50V,C0G,0603	C041, C042, C044, C046, C067, C068, C069, C076, C079, C080, C082, C087, C088, C090, C262, C265,, C273, C279, C294, C297, C305, C307
03	CCFS34	Cap,SMT,Ceramic,220pF,2%,50V, C0G,0603	C004, C005, C006, C014, C016, C017, C019, C021, C037
03	CCFS37	Cap,SMT,Ceramic,390pF,2%,50V,C0G,0603	C043
03	CCFS42	Cap,SMT,Ceramic,1000pF,2%,50V, C0G,0805	C054, C063, C065, C073, C075, C077, C078, C081, C084, C085, C086, C091, C114, C119, C125, C126,, C131, C132
03	CCFS52	Cap, SMT, Ceramic, 0.1uF, 10%, 25V X7R, 0603	C003, C009, C010, C012, C024, C025, C029, C030, C047, C051, C057, C060, C062, C064, C066, C071,, C072, C092, C093, C094, C095, C097, C100, C101, C102, C103, C104, C105, C107, C108, C109, C110,, C120, C121, C122, C123, C124, C127, C128, C133, C134, C135, C136, C137, C145, C146, C147, C148,, C149, C150, C151, C152, C153, C154, C155, C156, C160, C162, C163, C165, C167, C168, C169, C170,, C171, C173, C174, C175, C176, C177, C178, C179, C180, C182, C183, C184, C185, C186, C187, C188,, C189, C190, C191, C192, C193, C194, C195, C196, C197, C198, C199, C200, C201, C202, C203, C204,, C205, C206, C207, C208, C209, C210, C211, C212, C213, C214, C215, C216, C217, C218, C219, C220,, C221, C222, C224, C225, C226, C227, C228, C229, C230, C231, C233, C236, C237, C238, C239, C240,, C241, C242, C244, C245, C246, C247, C248, C249, C250, C251, C252, C253, C254, C255, C256, C257,, C258, C259, C260, C261, C263, C264, C266, C267, C268, C269, C270, C271, C272, C274, C275, C276,, C277, C278, C280, C281, C282, C283, C284, C286, C287, C288, C289, C290, C291, C292, C293, C295,, C296, C298, C299, C300, C301, C302, C303, C304, C306, C308, C309, C310, C311, C312, C313, C314,, C315, C317, C320, C321, C322, C323, C324, C325, C326, C327, C328, C329, C330, C331, C332, C333,, C334, C335, C336, C338, C340, C341, C342, C344, C345, C346, C347, C348, C349, C350, C352, C353,, C354, C355, C356, C358, C359, C360, C362, C363, C364, C365
03	CCFS53	Cap, SMT, Ceramic,47uF,20%, 6.3V, 1210	C001, C002, C008, C026, C027, C028, C074, C083, C106, C357

Component Lvl.	StockCode	Description	Reference Designation
03	CCFS57	Cap,SMT,Ceramic,10uF,20%,6.3V, X5R,0805	C007, C048, C049, C052, C055, C056, C115, C172, C181, C223, C232, C243, C285, C318, C337, C343,, C361
03	CCFS62	Cap, SMT, Ceramic, 10uF, 10%, 25V	C045, C058, C061, C070, C111, C351
03	CT57	Capacitor, SMT, Al Electroytic 330uF, 25VDC,ESR 0.	C011, C013, C022, C023, C033
03	CT68	Cap, SMT, Electrolytic, 68uF, 20%, 63V	C059, C099
03	CTFS04	Cap,SMT,Tantalum,100uF,10%,10V,2917	C112
03	CX38	Cap,SMT,Ceramic,4.7uF,10%,10V, X5R, 1206	C138
03	HAJ66	Terminal, SMT, Test Point, PWB	TP01, TP04, TP07, TP10, TP11, TP14
03	JF35	Conn, BNC, Recept, PWB Mt	J13, J15
03	JF47	Conn, Header,Square Post,Gold, Dual,40-pin	J16
03	JM44	Conn, Modular Jack, RJ45, Shld , Side, PWB, 50u	J02
03	JN60	Conn, Receptacle, Right Angle, SMA, PWB Mount	J01
03	JQ15	Conn, Post Shunt, 2 Pos, .10 C entreline	E01, E02
03	JQ16	Conn, Header, SIP, 12 Pin Breakaway, 10 Ctr	XE01, XE02
03	JQ54	Conn, Header, Ribbon Cbl, 10- Pin	J11
03	JQ77	Conn, SMT, Header, Ribbon Cabl e, 14 pin	J10
03	JS18	Conn, Plug, D-Sub, 15 pin, PWB Mt	J05
03	JS43	Conn, Plug, D-Sub, 25 pin, Ver t PWB	J09
03	JT100	Conn, Dual, BNC, PWB, Rt Angle	J07, J08
03	JT61	Conn, BNC, Recept, 50ohm,Insul , Rt Angle	J06
03	JT87	Conn,3-pin,PWB Mount, Fem, XLR	J04
03	JT99	Connector, Dual, D-Sub, F/F, 9 pin, Rt. Angle, PWB	J03
03	JU25	MTA, Keyed Square Post Header Assy, 4 pin	J12
03	LCFS01	Inductor, SMT, Choke, 600ohms, 2A, 0805	L01, L02, L03, L05, L07, L11, L12, L14, L15, L17, L18, L20, L21
03	LS17	Inductor,SMT,Pwr,Shielded,P116 7 Series,3.5A,3.6uH	L04, L06, L10
03	LS20	Inductor,SMT,560nH,325mA,2520	L08, L09, L13, L19
03	QBNS01	Transistor,SMT,NPN,Switch/Amp ,SOT-23	Q01, Q03
03	QDRS01	Diode,SMT,Switching,250V,0.2A, SOD-323	CR01, CR04
03	QDSS01	Diode, SMT, Schottky, 30V, 0.2A, SOD-323	CR05, CR06
03	QM48	Diode,SMT,Transient Suppr,10V, SMB	CR02, CR03
03	QS26	Transistor, SMT, P-Channel FET 130mA	Q02
03	RAD15	Resistor, SMT, MF, 150 Ohms, 1% 1/4W	R030, R035, R041, R047
03	RAD26	Resistor, SMT, MF, 1210 Ohms, 1% 1/4W	R092, R093, R114, R115, R123, R124, R135, R136
03	RAD44	Resistor, SMT, MF, 39.2K Ohms, 1% 1/4W	R261, R265, R268, R272, R275, R279, R282, R286

Component Lvl.	StockCode	Description	Reference Designation
03	RAD57	Resistor, SMT, 25.5 ohms, 1%, 2512	R205, R211
03	RAE25	Resistor,SMT,MF,3.74K,1%,1/10W ,0603	R014
03	RAE34	Resistor,SMT,MF,49.9R,1%,1/10W 0603	R004, R061, R071, R084, R125, R126, R127, R145, R153, R155, R163, R168, R178, R179, R181, R185,, R189, R190, R191, R196, R198, R199, R200, R203, R206, R207, R208, R209, R215, R216, R225
03	RFFS01	Resistor,SMT,MF,0.0ohms,Jumper ,0603	R259, R289
03	RFFS02	Resistor, SMT, MF, 1.00ohms, 1%, 1/10W, 0603	R220, R221
03	RFFS14	Resistor, SMT, MF, 10.0ohms, 1%, 1/10W, 0603	R246
03	RFFS18	Resistor, SMT, MF, 22.1ohms, 1%, 1/10W, 0603	R023, R045, R066, R072, R159, R210, R224, R226
03	RFFS21	Resistor, SMT, MF, 39.2ohms, 1%, 1/10W, 0603	R263, R267, R270, R274, R277, R281, R284, R288
03	RFFS26	Resistor, SMT, MF, 100ohms, 1%, 1/10W, 0603	R021, R036, R044, R054, R062, R081, R104, R148, R176, R177, R183, R186, R195, R201, R214, R231,, R247, R250, R264, R271, R278, R285
03	RFFS27	Resistor, SMT, MF, 121ohms, 1%, 1/10W, 0603	R151, R157
03	RFFS28	Resistor, SMT, MF, 150ohms, 1%, 1/10W, 0603	R042, R043
03	RFFS30	Resistor, SMT, MF, 221ohms, 1%, 1/10W, 0603	R016, R033
03	RFFS31	Resistor, SMT, MF, 274ohms, 1%, 1/10W, 0603	R055, R079, R218, R262, R266, R269, R273, R276, R280, R283, R287
03	RFFS33	Resistor, SMT, MF, 392ohms, 1%, 1/10W, 0603	R031, R032, R037, R040, R049, R053, R057, R074, R075, R078, R080
03	RFFS34	Resistor,SMT,MF,475ohms,1%, 1/10W,0603	R003, R077, R095, R166, R173, R175
03	RFFS36	Resistor, SMT, MF, 681ohms, 1%, 1/10W, 0603	R086, R105, R111, R120, R122, R129, R132, R147
03	RFFS37	Resistor, SMT, MF, 825ohms, 1%, 1/10W, 0603	R073
03	RFFS38	Resistor,SMT,MF,1000ohms,1%, 1/10W,0603	R005, R006, R008, R013, R022, R038, R069, R076, R085, R087, R088, R089, R091, R097, R101, R102,, R103, R107, R110, R117, R118, R119, R121, R128, R131, R146, R154, R156, R217, R230
03	RFFS39	Resistor,SMT,MF,1210ohms,1%, 1/10W,0603	R052, R139, R140, R141, R152, R158
03	RFFS40	Resistor,SMT,MF,1500ohms,1%, 1/10W,0603	R094, R096
03	RFFS42	Resistor,SMT,MF,2210ohms,1%, 1/10W,0603	R001, R002, R007, R009, R010, R019, R098, R165, R172, R180, R236
03	RFFS45	Resistor,SMT,MF,3920ohms,1%, 1/10W,0603	R020, R039, R233
03	RFFS46	Resistor, SMT, MF, 4750ohms, 1%, 1/10W, 0603	R229, R235

Component Lvl.	StockCode	Description	Reference Designation
03	RFFS50	Resistor,SMT,MF,10.0Kohms,1%, 1/10W,0603	R015, R017, R018, R024, R025, R026, R027, R034, R046, R048, R050, R051, R056, R058, R060, R063,, R064, R065, R067, R068, R070, R082, R083, R099, R100, R106, R109, R112, R113, R116, R130, R133,, R134, R137, R138, R142, R143, R144, R150, R161, R162, R164, R167, R169, R170, R171, R174, R182,, R184, R187, R188, R192, R193, R194, R197, R202, R204, R212, R213, R237, R238, R239, R240, R241,, R242, R248, R253, R254, R256, R257, R258, R290, R291
03	RFFS56	Resistor, SMT, MF, 33.2Kohms, 1%, 1/10W, 0603	R232
03	RFFS58	Resistor, SMT, MF, 47.5Kohms, 1%, 1/10W, 0603	R090
03	RFFS59	Resistor,SMT,MF,56.2Kohms,1%, 1/10W,0603	R219
03	RFFS60	Resistor,SMT,MF,68.1Kohms,1%, 1/10W,0603	R059
03	RFFS62	Resistor,SMT,MF,100Kohms,1%, 1/10W,0603	R011, R012, R028
03	RFFS83	Resistor, SMT, MF, 28.7K Ohms, 1%, 1/10W, 0603	R029
03	RFFS87	Resistor, SMT, 200ohm, 1%, 1/10W, 0603	R222, R223, R227, R228, R234, R244
03	RFFS88	Resistor, SMT, MF, 10.0Mohms, 1%, 1/10W, 0603	R260
03	SA60	Switch,SMt,Mom.,1PSTNO	S01
03	TZ102	Transformer, SMT, Balun, 4.5- 1000MHz	T04
03	TZ103	Transformer, SMT, 4:1, 2-300 MHz	T03
03	TZ70	Transformer, SMT, 1:1 0 800MHz	T05
03	TZ88	Transformer,SMT,50 ohms,0.03 to 125MHz	T01, T02
03	UD65	IC,SMT,Differential Line Receivr, 100dB CMR	U11
03	UDLS09	IC,SMT,CMOS,Hex Inverter,Unbuf f,SO-14	U32
03	UDTS04	IC,SMT,RS-485 Transceiver,3.3V ,SO-8	U29, U55, U57, U60
03	UDTS05	IC, SMT, RS-232 Transceiver, 3.3V, SO-16	U49
03	UM61	Filter, SMT, Band Pass FM	U64
03	UP104	IC, SMT, Voltage Regulator, Dual, ADJ TSSOP16	U16
03	UP93	IC,SMT,Op Amp,Audio,Dual,SO-8	U02, U03, U06, U12, U17, U19, U22, U27, U30
03	US03	IC, SMT, CMOS, Dual 4-1 MUX, TSSOP-16	U44, U51
03	US05	IC, SMT, RF DAC, 1GSPS, TQFP- 100	U58
03	US07	IC, SMT, ADC, 1.25MSPS, 16bit, TQFP-48	U13
03	US08	IC, SMT, Blackfin DSP, 500MHz, bga-316	U38
03	US09	IC, SMT, Battery Backup,SOIC-8	U20
03	US12	IC, SMT, Rectifier, Bridge, 400V, 0.5A, SOIC-4	U67, U68, U69, U70, U71, U72

Component Lvl.	StockCode	Description	Reference Designation
03	US13	IC, SMT, SDRAM, 16Mx16, 3.3V, TSOP-54	U26
03	US16	IC, SMT, Differential Audio Am p, MSOP-8	U14, U18, U23, U28, U31
03	US17	IC, SMT, Audio DAC, 24-bit,192 KHz, SSOP-28	U01
03	US18	IC, SMT, ADC, 4ch, 24-bit, 192 KHz	U25
03	US19	IC, SMT, Digital Step Attenator, QFN-20	U62, U66
03	US20	IC, SMT, stereo Volume Control , SOIC-16	U08
03	US21	IC, SMT, SiGe Gain Block, 20dB , SOT-89-3	U65
03	US22	IC, SMT, Dual LVDS, Transceive r, TSSOP-16	U52, U54
03	US25	IC, SMT, ADC, 11-ch, 10-bit, 3.3V, SPI, SSOP-20	U21
03	US29	IC, SMT, CMOS, PLL/Divider, 48-LFCSP	U63
03	US31	IC, SMT, CMOS, Quad Tri-State Buff, SOIC-14	U15
03	US33	Oscillator, SMT, VCSO, 635.04 MHz Fund, LVPECL	Y02
03	UT110	IC, Voltage Regulator, 1.5A, ADJ, Low Drop	U47
03	UT114	IC, Voltage Regulator, +8V, 1A DPAK	U59
03	UT116	Oscillator, SMT, TCVCXO, 3.3V, 2ppm, 5x3.2mm	U33
03	UT83	IC,SMT,Ultrafast Single Supply Comparator,TSSOP	U46
03	UT93	IC,SMT,Voltage Regulator,5V, 1A, D2PAK	U05
03	UW125	IC, SMT, SPI Flash, 32Mbit, SOIC8W	U50
03	UW126	IC, SMT, FPGA, Spartan 3A-DSP- 3400 484BGA	U56
03	UW63	Res,SMT Network,0402x8,39R	U35, U36, U37, U39, U41, U42, U45
03	UW80	IC,SMT,SRC,Async,2-ch,TQFP-48	U34, U43
03	UW91	IC,SMT,SPI UART,3.3V	U48, U53
03	UW94	IC,SMT,ADC,RF,14 bit,TQFP-64	U61
03	UX64	IC,SMT,Power Supervisor,Dual I/P,33/1.5V,MSOP	U10
03	UX65	IC,SMT,3A Sync Buck Converter, SO-20 w/pwr pad	U04, U07
03	UX83	IC,SMT,2.5V Reference,0.1%,SOT -23-6	U09, U24
03	XFPS02Z	Crystal,SMT,Fund,Par Res, 32.768kHz	Y01
02	NAPP06/01	Output Power Probe PWB Assy, NVE-LT	A05
03	CCFS04	Cap,SMT,Ceramic,0.01uF,10%,50V,X7R,0603	C04, C10
03	CCFS07	Cap,SMT,Ceramic,0.1uF,10%,50V,X7R,0805	C06, C07
03	CCFS10	Cap,SMT,Ceramic,1uF,10%,25V,X7R,1206	C03, C09
03	CCFS62	Cap, SMT, Ceramic, 10uF, 10%, 25V	C05, C08
03	CX38	Cap,SMT,Ceramic,4.7uF,10%,10V, X5R, 1206	C01
03	RAD05	Resistor, SMT, MF, 22.1 Ohms, 1% 1/4W	R05, R25

Component Lvl.	StockCode	Description	Reference Designation
03	RAD11	Resistor, SMT, MF, 68.1 Ohms, 1% 1/4W	R22
03	RAD12	Resistor, SMT, MF, 82.5 Ohms, 1% 1/4W	R06, R23, R24
03	RAD14	Resistor, SMT, MF, 121 Ohms, 1%, 1/4W, 1206	R03, R07, R12
03	RAD15	Resistor, SMT, MF, 150 Ohms, 1% 1/4W	R11, R14, R15, R16, R17, R30, R31, R32
03	RAD17	Resistor, SMT, MF, 221 Ohms, 1% 1/4W	R04, R13
03	RAD18	Resistor, SMT, MF, 274 Ohms, 1% 1/4W	R18, R27
03	RAD19	Resistor, SMT, MF, 332 Ohms, 1% 1/4W	R02, R09, R19, R21, R26, R28
03	RAD25	Resistor, SMT, MF, 1000 Ohms, 1% 1/4W	R08
03	RAD29	Resistor, SMT, MF, 2210 Ohms, 1% 1/4W	R01, R10, R20, R29
03	UX122	IC, SMT, tru RMS power detecto r, 5.5V	U01, U02
02	NAPS47E/01	PS Distribution PWB Assy, (used w/NAPA35)	A02
03	CCFS01	Cap,SMT,Ceramic,0.001uF,10%,50V,X7R,0603	C004, C008, C115, C117
03	CCFS02	Cap,SMT,Ceramic,0.0022uF,10%, 50V,X7R,0603	C041
03	CCFS04	Cap,SMT,Ceramic,0.01uF,10%,50V,X7R,0603	C014, C046, C049, C054, C062, C080, C100, C102
03	CCFS05	Cap,SMT,Ceramic,0.022uF,10%,50 V,X7R,0603	C070, C071, C077, C104
03	CCFS10	Cap,SMT,Ceramic,1uF,10%,25V,X7R,1206	C003, C009, C141
03	CCFS23	Cap,SMT,Ceramic,18pF,2%,50V, C0G,0603	C016, C019
03	CCFS24	Cap,SMT,Ceramic,22pF,2%,50V, C0G,0603	C031, C096, C120, C123, C124, C126, C139
03	CCFS32	Cap,SMT,Ceramic,100pF,2%,50V,C0G,0603	C018, C020, C023, C029, C030, C087, C140
03	CCFS34	Cap,SMT,Ceramic,220pF,2%,50V, C0G,0603	C055, C056, C057
03	CCFS36	Cap,SMT,Ceramic,330pF,2%,50V, C0G,0603	C088, C089, C090
03	CCFS38	Cap,SMT,Ceramic,470pF,2%,50V, C0G,0603	C032, C107, C121, C127, C130, C132, C134
03	CCFS42	Cap,SMT,Ceramic,1000pF,2%,50V, C0G,0805	C118
03	CCFS52	Cap, SMT, Ceramic, 0.1uF, 10%, 25V X7R, 0603	C013, C015, C026, C028, C038, C042, C043, C044, C045, C047, C048, C050, C051, C052, C053, C058,, C059, C064, C065, C066, C068, C074, C075, C076, C081, C083, C084, C085, C086, C091, C092, C093,, C095, C106, C108, C111, C116, C119, C122, C131, C133, C136, C137, C142
03	CCFS53	Cap, SMT, Ceramic,47uF,20%, 6.3V, 1210	C034, C035, C039, C040
03	CCFS60	Cap,SMT,Ceramic,1uF,10%,100V, X7R,1210	C025, C060, C069
03	CCFS61	Cap,SMT,Ceramic,0.001uF,10%, 100V,X7R,0805	C005, C073, C098, C099, C128, C138
03	CCFS62	Cap, SMT, Ceramic, 10uF, 10%, 25V	C002, C021, C037
03	CCFS72	Cap, SMT, Ceramic, 10uF, 10%, X7R, 50V, 2220	C036
03	CT50	Capacitor,SMT,Ceramic,0.01uF, 100V,10%	C067
03	CT51	Capacitor,SMT,Ceramic,0.1uF, 100V,10%	C007, C078, C094, C097, C109, C125, C135

Component Lvl.	StockCode	Description	Reference Designation
03	CT57	Capacitor, SMT, Al Electroytic 330uF, 25VDC,ESR 0.	C010, C011, C012
03	CT64	Capacitor, SMT, Ceramic, 2.2uF 10%, 100V, X7R, 181	C006, C063, C072, C082, C101, C103, C105, C110, C112, C113, C114
03	CT75	Cap, SMT, Electrolytic, 470uF, 20%, 63VDC, Low ESR	C001, C033, C061, C079
03	CTFS02	Cap,SMT,Tantalum,1uF,10%,35V, 1411	C017, C022, C024, C027, C129
03	FA56	Fuse, SMT, Fuse Block, 7A VeryFast Acting Installe	F01
03	FA72	Fuse, 20A, 150V, 10x38mm, High Speed	F02
03	FC27	Fuse Clip, 20A, 13/32 Dia Fuse, PWBMt	XF2
03	HAJ66	Terminal, SMT, Test Point, PWB	TP01, TP03, TP04, TP05, TP06, TP07, TP08, TP09, TP10, TP11 TP12
03	JF47	Conn, Header,Square Post,Gold, Dual,40-pin	J02
03	JS13	Conn, Socket, D-Sub, 25 pin, P WB Mt	J03
03	JT148	Connector, Header, 2 pos, 90 deg, PWB,20A, 600V, 7	J01
03	JU60	MTA, Keyed Square Post Header Assy, 3 pin	J04
03	KC51	Relay,24Vdc,FORM A,NO,80 Amp PWB	K01
03	LA44	Inductor, Choke, Toroid, 10uH, 10A	L41
03	LCFS01	Inductor, SMT, Choke, 600ohms, 2A, 0805	L01, L02, L03, L04, L05, L06, L07, L08, L10, L11, L15, L16, L17, L18, L19, L22, L23, L24, L33, L39
03	LCFS02	Inductor, SMT, Choke, 2000 ohm s, 80mA, 0805	L09, L20, L25, L26, L28, L29, L30, L31, L32, L34, L35, L36, L37, L38
03	LS24	Inductor, SMT, 10uH, 2.4A, RMS	L21
03	LS45	Inductor, SMT, Shielded, 33uH, 3.3A RMS	L12, L13, L14
03	LS46	Choke. Common Mode, 170ohms @100MHz. 20A	L27
03	LS49	Inductor, Toroid, 10uH, 20A	L40
03	QBNS01	Transistor,SMT,NPN,Switch/Amp ,SOT-23	Q03
03	QDDS02	Diode, SMT, Schottky, 40V, 1A, SMA	CR08
03	QDLS01	Diode, SMT, LED, Green, (560nm), 0603	DS02
03	QDLS07	Diode, SMT, LED, Amber, (592nm), 0603	DS03
03	QDRS01	Diode,SMT,Switching,250V,0.2A, SOD-323	CR07, CR09, CR10, CR12, CR13
03	QDS02	Diode, SMT, Schottky, 3.5Ax2, 100V DPAK	U05, U06, U07
03	QDZS02	Diode,SMT,Zener,15V,5%,3W,SMB	CR11
03	QM66	LED, Bi-Level, PWB Mount, Thru -hole, Green/Green	DS01
03	QMN01	Transister, FET, SMT, N-ch, 100V, DPAK	Q01
03	QN53	Transistor,SMT,MOSFET,N-Channe l,60V,115mA,SOT-23	Q04, Q05, Q06
03	QR70	Suppressor, Transient Voltage, SMT 60V Clamp	CR01, CR02, CR03, CR04, CR05, CR06

Component Lvl.	StockCode	Description	Reference Designation
03	QR71	Transistor, FET, P-channel, D2Pak	Q02
03	RAD21	Resistor, SMT, MF, 475 Ohms, 1% 1/4W	R011, R107, R127, R128, R130, R133, R141
03	RAD37	Resistor, SMT, MF, 10.0K Ohms, 1%, 1/4W	R057, R064, R065, R067, R104, R105, R118, R119
03	RAD41	Resistor, SMT, MF, 22.1K Ohms, 1% 1/4W	R068, R070, R071, R152
03	RAD48	Resistor, SMT, MF, 82.5K Ohms, 1% 1/4W	R072
03	RAD49Z	Resistor,SMT,MF,10ohms, 1%,2W	R047, R048, R049
03	RAD75	Resistor, SMT, 2 Ohms, 5%, 1/4 W, 1206	R017, R069
03	RAD76	Resistor, SMT, 1000 Ohms, 5%, 1W, 2512	R012, R020, R031, R040
03	RAD80	Resistor, SMT,10k Ohms, 1%, 1W 2512	R059, R060, R073, R079, R108, R109
03	RAD82	Resistor, AMT, MF, 0.2 Ohms, 1 %, 2W, 2512	R122
03	RFCS04	Resistor, SMT, 0.002 ohms, 1%, 5W	R110
03	RFFS01	Resistor,SMT,MF,0.0ohms,Jumper ,0603	R014, R021, R037, R039, R046, R050, R051, R058, R074, R111, R112, R113, R114, R131, R134, R135,, R136, R144, R145
03	RFFS26	Resistor, SMT, MF, 100ohms, 1%, 1/10W, 0603	R006, R036, R042, R066, R102, R106, R121, R138, R155
03	RFFS34	Resistor,SMT,MF,475ohms,1%, 1/10W,0603	R016
03	RFFS38	Resistor,SMT,MF,1000ohms,1%, 1/10W,0603	R004, R024, R054, R055, R061, R062, R063, R076, R077, R100, R101, R124, R125, R126, R132
03	RFFS39	Resistor,SMT,MF,1210ohms,1%, 1/10W,0603	R087
03	RFFS40	Resistor,SMT,MF,1500ohms,1%, 1/10W,0603	R003, R120
03	RFFS41	Resistor,SMT,MF,1820ohms,1%, 1/10W,0603	R081, R084
03	RFFS43	Resistor, SMT, MF, 2740ohms, 1%, 1/10W, 0603	R043
03	RFFS44	Resistor,SMT,MF,3320ohms,1%, 1/10W,0603	R075, R086, R137
03	RFFS46	Resistor, SMT, MF, 4750ohms, 1%, 1/10W, 0603	R002, R005, R008, R029, R056, R094, R096
03	RFFS50	Resistor,SMT,MF,10.0Kohms,1%, 1/10W,0603	R009, R019, R028, R033, R034, R035, R044, R053, R078, R080, R083, R098, R149
03	RFFS52	Resistor,SMT,MF,15.0Kohms,1%, 1/10W,0603	R030, R082, R085, R088, R151
03	RFFS53	Resistor,SMT,MF,18.2Kohms,1%, 1/10W,0603	R099
03	RFFS54	Resistor,SMT,MF,22.1Kohms,1%, 1/10W,0603	R025
03	RFFS56	Resistor, SMT, MF, 33.2Kohms, 1%, 1/10W, 0603	R157
03	RFFS57	Resistor,SMT,MF,39.2Kohms,1%, 1/10W,0603	R095, R097
03	RFFS58	Resistor, SMT, MF, 47.5Kohms, 1%, 1/10W, 0603	R032, R089
03	RFFS59	Resistor,SMT,MF,56.2Kohms,1%, 1/10W,0603	R038
03	RFFS62	Resistor,SMT,MF,100Kohms,1%, 1/10W,0603	R103, R123, R129, R159
03	RFFS63	Resistor, SMT, MF, 121Kohms, 1%, 1/10W, 0603	R023, R041, R156

Component Lvl.	StockCode	Description	Reference Designation
03	RFFS65	Resistor, SMT, MF, 182Kohms, 1%, 1/10W, 0603	R026
03	RFFS66	Resistor, SMT, MF, 221Kohms, 1%, 1/10W, 0603	R013
03	RFFS70	Resistor, SMT, MF, 475Kohms, 1%, 1/10W, 0603	R045, R092, R117, R139, R142, R154
03	RFFS72	Resistor, SMT, MF, 681Kohms, 1%, 1/10W, 0603	R150
03	RFFS73	Resistor,SMT,MF,825Kohms,1%, 1/10W,0603	R158
03	RFFS75	Resistor, SMT, MF, 1.21Mohms, 1%, 1/10W, 0603	R027
03	RFFS77	Resistor, SMT, MF, 1.82Mohms, 1%, 1/10W, 0603	R093, R143
03	RT60	Resistor, Chip, AIN, 50 Ohm, 2%, 30W, 3725	R001, R007
03	RX65	Thermister, PTC, SMT, 2920, 0.3-0.95 Ohm, 60V Max,	RT02, RT03
03	RX68	Thermistor, SMT, 10k Ohms @25C 0402	RT01
03	UA96	IC,SMT,CMOS,Dual D Flip-Flop, SO-14	U18
03	UDLS09	IC,SMT,CMOS,Hex Inverter,Unbuf f,SO-14	U17
03	UDMS04	IC,SMT,CMOS,8-Ch Analog MUX, SOIC-16	U08
03	UDOS01	IC,SMT,Dual Optocoupler,SOIC-8	U19
03	UDSS02	IC,SMT,Microprocessor Supervisor 4.38V, SC70	U16
03	ULAS02	IC,SMT,Opamp,Quad,Rail-To-Rail ,SOIC-14	U13, U15
03	ULCS01	IC,SMT,Comparator,Quad,SOIC-14	U03, U20
03	ULRS02	IC,SMT,4.096V Reference,0.1%, SOT-23-6	U04
03	UP105	IC, SMT, DC-DC Converter, Boost/Inverting MSOP8	U02
03	UP112	IC, SMT, Step Down Reg., 75V, 3A, TSSOP-20	U09, U10, U11
03	UT74	IC, Amplifier, Instrumentation	U12, U14
03	UX184	IC, SMT, Micro, ADC, PWM, TQFP-32, 16k Flash	U01
03	XFPS18	Crystal, SMT, Fund, Par Res, 14.7456MHz, 30ppm, 18	Y01
02	RX49	Thermistor,-30/105ºC,10Kohms@ 25ºC,Neg,Bvalue 3435	RT01
02	UT87	Voltage Regulator, Adj, 1.5A, 60V IN	A3U1
02	ZAP50	Fan, 80mm, Brushless, 48Vdc, EMI Caps, Tach w/conn	B01
01	**NAPE74C/01**	**Exgine PWB Assy, NVE & Power Boost**	A08
02	CCFS01	Cap,SMT,Ceramic,0.001uF,10%,50V,X7R,0603	C013
02	CCFS06	Cap, SMT, Ceramic, 0.047uF, 10%, 50V, X7R, 0603	C015, C050, C065, C115
02	CCFS30	Cap,SMT,Ceramic,68pF,2%,50V, C0G,0603	C014
02	CCFS32	Cap,SMT,Ceramic,100pF,2%,50V,C0G,0603	C049, C059, C120

Component Lvl.	StockCode	Description	Reference Designation
02	CCFS52	Cap, SMT, Ceramic, 0.1uF, 10%, 25V X7R, 0603	C001, C002, C003, C004, C005, C008, C009, C010, C017, C018, C019, C020, C021, C022, C023, C024,, C031, C032, C034, C036, C037, C039, C041, C043, C044, C051, C052, C053, C054, C055, C056, C063,, C067, C091, C107, C108, C109, C117, C122, C127, C139, C143, C144, C146, C147, C150, C151, C152,, C161, C162, C163, C167, C169, C170, C171, C172, C173, C174, C178, C181, C182, C184, C185, C186,, C188, C189, C190, C191, C192, C194, C195, C196, C197, C198, C199, C200, C201, C202, C203, C204,, C205, C206, C207, C208, C209, C210, C212, C213, C214, C215, C216, C217, C221, C222, C223, C224,, C225, C226, C227, C228, C229, C230, C231, C232, C233, C234, C235, C236, C237, C238, C239, C240,, C241, C242, C243, C244, C245, C246, C247, C248, C249, C250, C251, C252, C253, C254, C255, C256,, C257, C258, C259, C260, C261, C262, C263, C264, C265, C266, C267, C268, C269, C270, C271, C272,, C273, C274, C275, C276, C277, C278, C279, C280, C281, C282, C283, C284
02	CCFS53	Cap, SMT, Ceramic,47uF,20%, 6.3V, 1210	C030, C033, C035, C061, C064, C068, C070, C071, C072, C073, C102, C103, C111
02	CCFS54	Cap,SMT,Ceramic,1500pF,10%,50V ,X7R,0603	C016, C025, C058
02	CCFS55	(Z)Cap,SMT,Ceramic,2200pF,10%, 50V,X7R,0603	C047, C048, C057, C126, C130
02	CTFS01	Cap,SMT,Tantalum,10uF,10%,16V, 1411	C006, C007, C011, C012, C026, C027, C028, C029, C040, C042, C045, C046, C062, C066, C069, C074,, C076, C080, C081, C082, C083, C085, C086, C087, C088, C089, C092, C098, C105, C106, C113, C114,, C116, C131, C132
02	CTFS04	Cap,SMT,Tantalum,100uF,10%,10V,2917	C119
02	CX32	Cap,SMT,Ceramic,10uF,20%,10V, X5R,1206	C112
02	CX35	Cap,SMT,Ceramic,0.22uF,20%, 16V,X7R,0603	C077, C078, C079, C084, C090, C093, C094, C095, C096, C097, C099, C100, C101, C104, C110, C118,, C121, C123, C124, C125, C128, C129, C133, C134, C135, C136, C137, C138, C140, C141, C142, C145,, C148, C149, C153, C154, C155, C156, C157, C158, C159, C160, C164, C165, C166, C168, C175, C176,, C177, C179, C180, C183, C187, C193, C211, C218, C219, C220
02	CX38	Cap,SMT,Ceramic,4.7uF,10%,10V, X5R, 1206	C038, C060, C075
02	EXGINE LICENSE	Licensing Fee for Exgine (NAPE74*)	
02	HR10	Terminal, Test Point, PWB, Yellow	TP05, TP10, TP11, TP12, TP13, TP14, TP15, TP16, TP17, TP18 TP19, TP20

Component Lvl.	StockCode	Description	Reference Designation
02	JF47	Conn, Header,Square Post,Gold, Dual,40-pin	J07, J10
02	JM44	Conn, Modular Jack, RJ45, Shld , Side, PWB, 50u	J02
02	JM47	Conn,Jack,RJ45,IEE802.3,1500VR MS	J01
02	JQ15	Conn, Post Shunt, 2 Pos, .10 C entreline	E01
02	JQ16	Conn, Header, SIP, 12 Pin Breakaway, 10 Ctr	J06, XE01
02	JQ54	Conn, Header, Ribbon Cbl, 10- Pin	J08, J09
02	JS21	Conn, BNC, Recept, Rt Angle, P WB Mt	J03, J04
02	JU24	MTA, Keyed Square Post Header Assy, 8 pin	J05
02	LCFS01	Inductor, SMT, Choke, 600ohms, 2A, 0805	L02, L03, L04, L05, L06, L09, L11, L13, L16
02	LS15	Inductor,SMT,Pwr,Shielded Drum Core, P1167series,	L01
02	LS17	Inductor,SMT,Pwr,Shielded,P116 7 Series,3.5A,3.6uH	L08, L12, L14
02	LS18	Inductor,SMT.2.2uH,600ma,1210	L17, L18
02	QDLS01	Diode, SMT, LED, Green, (560nm), 0603	DS05
02	QDLS07	Diode, SMT, LED, Amber, (592nm), 0603	DS01, DS02, DS03, DS04
02	QDSS01	Diode, SMT, Schottky, 30V, 0.2A, SOD-323	CR01, CR02
02	RAB37	Resistor, MF, 10.0K Ohms, 1PC 1/4W	R218
02	RAE25	Resistor,SMT,MF,3.74K,1%,1/10W ,0603	R076
02	RAE26	Resistor,SMT,MF,499R,1%,1/10W ,0603	R067, R180
02	RAE30	Resistor,SMT,MF,5.49K,1%,1/10W ,0603	R181
02	RAE31	Resistor,SMT,MF,6.49K,1%,1/10W ,0603	R017
02	RAE33	Resistor,SMT,MF,15.4K,1%,1/10W ,0603	R060
02	RAE34	Resistor,SMT,MF,49.9R,1%,1/10W 0603	R009, R201, R202, R203, R204
02	RFFS01	Resistor,SMT,MF,0.0ohms,Jumper ,0603	R001, R030, R034, R035, R036, R050, R051, R057, R211
02	RFFS18	Resistor, SMT, MF, 22.1ohms, 1%, 1/10W, 0603	R038, R063, R064, R074, R075, R078, R087, R102, R112
02	RFFS21	Resistor, SMT, MF, 39.2ohms, 1%, 1/10W, 0603	R142, R143
02	RFFS26	Resistor, SMT, MF, 100ohms, 1%, 1/10W, 0603	R177
02	RFFS34	Resistor,SMT,MF,475ohms,1%, 1/10W,0603	R002, R003, R004, R005, R027, R052, R053, R054
02	RFFS36	Resistor, SMT, MF, 681ohms, 1%, 1/10W, 0603	R041, R069
02	RFFS38	Resistor,SMT,MF,1000ohms,1%, 1/10W,0603	R012, R070, R071, R072, R073, R083, R084, R085, R094, R095, R103, R105, R106, R107, R108, R111,, R116, R117, R118, R132, R139, R149, R151, R160, R168, R170, R171, R172, R173, R176, R187, R205,, R206, R207, R208, R209, R210, R213
02	RFFS40	Resistor,SMT,MF,1500ohms,1%, 1/10W,0603	R007, R011
02	RFFS41	Resistor,SMT,MF,1820ohms,1%, 1/10W,0603	R008, R010

Component Lvl.	StockCode	Description	Reference Designation
02	RFFS44	Resistor,SMT,MF,3320ohms,1%, 1/10W,0603	R049, R089, R097, R098, R099, R100, R101, R114, R115, R119, R120, R121, R122, R125, R126, R127,, R138, R152, R154, R157, R162, R164, R169
02	RFFS46	Resistor, SMT, MF, 4750ohms, 1%, 1/10W, 0603	R014, R028, R029, R031, R032, R047, R185, R186, R214, R215, R216, R217
02	RFFS50	Resistor,SMT,MF,10.0Kohms,1%, 1/10W,0603	R015, R016, R018, R024, R025, R026, R037, R039, R040, R045, R046, R048, R059, R061, R062, R068,, R077, R080, R081, R082, R086, R128, R129, R134, R135, R136, R140, R141, R174, R175, R183, R184,, R198, R199, R200
02	RFFS52	Resistor,SMT,MF,15.0Kohms,1%, 1/10W,0603	R020, R023
02	RFFS57	Resistor,SMT,MF,39.2Kohms,1%, 1/10W,0603	R066
02	RFFS58	Resistor, SMT, MF, 47.5Kohms, 1%, 1/10W, 0603	R019
02	RFFS59	Resistor,SMT,MF,56.2Kohms,1%, 1/10W,0603	R021, R022
02	RFFS61	Resistor, SMT, MF, 82.5Kohms, 1%, 1/10W, 0603	R065
02	RFFS62	Resistor,SMT,MF,100Kohms,1%, 1/10W,0603	R043, R079, R182
02	RFFS74	Resistor,SMT,MF,1.00Mohms,1%, 1/10W,0603	R033
02	RFFS83	Resistor, SMT, MF, 28.7K Ohms, 1%, 1/10W, 0603	R042
02	RT50	Resistor,SMT,MF,0.0 ohms, Jumper,0805	R044, R058, R113, R161
02	SD62	Switch, SMT, Momentary Push Button	S01
02	UD59	IC,SMT,Dual D Flip-Flop,TSSOP	U17
02	UD60	IC,SMT,3.3V Zero Delay Buffer, SOIC	U15
02	UDMS07	IC, SMT, Spartan3-400 FPGA, FT-256	U13
02	UDMS08	IC, SMT, FPGA Config. Flash, 4Mbit,SO-20 Wide	U01
02	UDMS10	IC,SMT,128Mb,Flash,TSOP56	U14
02	UDTS04	IC,SMT,RS-485 Transceiver,3.3V ,SO-8	U26
02	UDTS05	IC, SMT, RS-232 Transceiver, 3.3V, SO-16	U25
02	UR80	IC, Fixed Point DSP, 600MHz, FCBGA532	U21
02	UT126	Oscillator, TCXO, 10MHz,2.0ppm 3.3V, 5mmx3.2mm -40	U08
02	UT82	Ic, Power PC Processor, 266MHz , PBGA456	U19
02	UT83	IC,SMT,Ultrafast Single Supply Comparator,TSSOP	U07, U10
02	UT85	Oscillator,SMT,50MHz	Y02
02	UT86	Oscillator,SMT,33.3MHz	Y01
02	UW63	Res,SMT Network,0402x8,39R	R123, R124, R130, R133, R137, R144, R145, R146, R147, R156, R166, R188, R189, R190, R191, R192,, R193, R194, R195, R196, R197
02	UW64	IC,SMT,DAC,16 Bit Serial,MSOP-9	U06

Component Lvl.	StockCode	Description	Reference Designation
02	UX61	IC, SMT, CPLD, 10ns, VQFP-64	U11
02	UX64	IC,SMT,Power Supervisor,Dual I/P,33/1.5V,MSOP	U05
02	UX65	IC,SMT,3A Sync Buck Converter, SO-20 w/pwr pad	U12, U16, U18, U24
02	UX93Z	IC,SMT,Ethernet Phy,3.3V,LQFP 48	U09
02	UX94	IC,SMT,4Mx32,SDRAM,3.3V, TSOP86	U20, U22, U23, U27, U28, U29
02	UX96	IC,SMT,3.0V LDO Regulator,100 mA,SOT23	U03
02	UX97	IC,SMT,3.3V Voltage Reference, SOT23-3	U02

END OF ITEM

Component Lvl. StockCode	Description	Reference Designation
01 **219-5060-01**	**Exciter Cableset Assy, GV LP**	
02 JDP41	Conn, Coax, BNC, Plug, 50ohm, Crimp,RG142	W27P2, W28P2
02 JS102	Conn, Socket, D-Sub, 15-pin, solder cup	W26P2, W26P3
02 JS103	Conn, Shell, D-Sub, 15-pin	W26P2, W26P3
02 JS29	Conn, Plug, D-Sub, 9 pin	W26P1
02 JS33	Conn, Shell, D-Sub, 9 pin	W26P1
02 JT12	Conn, Coax, N, Plug, Crimp, RG 142	W27P1, W28P1
02 JT16	Conn, Lock Screw, D-Sub, 4-40, Male, Kit	W26P1, W26P2, W26P3
02 UA164	Cable, Cat5e, 3ft, Shld, Black , 75C, 26AWG	W23
02 UA165	Cable, Cat5e, 4ft, Shld, Black , 75C, 26AWG	W24, W25
01 **219-5067**	**Audio Cable Kit**	
02 206-5062	NAPE86* Audio Breakout Cable Assy	
03 JN47	Conn, XLR, 3-Pin, Straight, Audio, Female	J01, J02, J03, J04, J05
03 JS102	Conn, Socket, D-Sub, 15-pin, solder cup	P01
03 JS103	Conn, Shell, D-Sub, 15-pin	P01
02 206-5068	USB Backup Audio Patch Cable Assy	
03 JN02	Conn, XLR, 3-Pin, Straight, Audio, Male	P02, P03
03 JS29	Conn, Plug, D-Sub, 9 pin	P01
03 JS33	Conn, Shell, D-Sub, 9 pin	P01
03 JT16	Conn, Lock Screw, D-Sub, 4-40, Male, Kit	P01
01 **219-5250**	**Fuse Bracket Assy, GV Monitor Fan**	
02 BAP30	Fuseholder, Panel, 20A, 250V, Type 3AG	XF01
02 FC54	Fuse, 5A, 250V, Fast, 3AB	F01
01 **219-8101-14**	**Cableset Assy, 5kW GV**	
02 JQ67	Conn, ferrule, 8mm, non insul, for 18AWG	W31P1
02 JU32	Plug, Mini, 2-pole,Screw Clamp	W31P1

Component Lvl.	StockCode	Description	Reference Designation
02	UA188	Cable, 6ft, 25-pin, D-sub,M/F, Straight-Through	W20, W21
02	UA254	Cable 12ft, 5.5mm/2.1mm M to F , 18 AWG	W31P2
02	UA255	Cable 10ft Serial DB9F to DB9F	W32
02	UA279	CABLE, VGA, 10FT, 14 PIN, DUAL FERRITES	W33
02	UA81	Cable, Cat5E, Patch, RJ45 10'	W29
01	**219-8108-09**	**AC/LV Cable Set Assy, 5kW GV**	
02	HAM04	Connector, Quick-Dis, F, 3/16 Tab (22-18AWG)	P19, P21, P22
02	JQ17	Conn, Contact, Pin, HDP-20 Strip	P24
02	JQ18	Conn, Contact, Socket, HDP-20 Strip	P20, P23
02	JR27	Conn, Socket, D-Sub, 9 pin	P20, P23
02	JR28	Conn, Plug, D-Sub, 9 pin	P24
02	JS33	Conn, Shell, D-Sub, 9 pin	P20, P23, P24
02	JT16	Conn, Lock Screw, D-Sub, 4-40, Male, Kit	P20, P23, P24
01	**NAPI143/01**	**Remote Interface w/ Terminal Block, PWB Assy (NVL**	A16
02	CCFS01	Cap,SMT,Ceramic,0.001uF,10%,50V,X7R,0603	C068, C069
02	CCFS07	Cap,SMT,Ceramic,0.1uF,10%,50V,X7R,0805	C067, C070
02	CCFS24	Cap,SMT,Ceramic,22pF,2%,50V, C0G,0603	C001, C002, C003, C004, C005, C006, C007, C008, C009, C010, C021, C022, C023, C024, C025, C026,, C027, C028, C029, C030, C031, C032, C033, C034, C035, C036, C037, C038, C039, C040, C043, C104,, C105, C106, C107, C108, C109, C110, C111, C112, C113, C114, C115, C116, C117, C118, C119, C120,, C121, C122, C123, C126, C127, C128, C129, C130, C131, C132, C133, C134, C135, C136
02	CCFS32	Cap,SMT,Ceramic,100pF,2%,50V,C0G,0603	C041, C042, C124, C125
02	CCFS38	Cap,SMT,Ceramic,470pF,2%,50V, C0G,0603	C011, C012, C013, C014, C015, C016, C017, C018, C019, C020, C044, C045, C046, C047, C048, C049,, C050, C051, C052, C053, C054, C055, C056, C057, C058, C059, C060, C061, C062, C063, C064, C073,, C074, C075, C076, C077, C078, C079, C080, C081, C082, C083, C084, C085, C086, C087, C088, C089,, C090, C091, C092, C093, C094, C095, C096, C097, C098, C099, C100, C101, C102, C103
02	CCFS60	Cap,SMT,Ceramic,1uF,10%,100V, X7R,1210	C065, C066, C071, C072

Component Lvl.	StockCode	Description	Reference Designation
02	HAJ66	Terminal, SMT, Test Point, PWB	TP01, TP02, TP03, TP04, TP05, TP06
02	JMT01	Connector, Modular, RJ45, Vert , PWB, Shld, 50u Au	J01, J02
02	JQ15	Conn, Post Shunt, 2 Pos, .10 C entreline	E01, E02
02	JQ16	Conn, Header, SIP, 12 Pin Breakaway, 10 Ctr	XE01, XE02
02	JR50	Terminal Block,5mm,3-pos,PWB Mt,Green	TB01
02	JR63	Terminal Block, 3.5mm, 2 level , 13pos/level, Pwb	TB02, TB03
02	JS12	Conn, Plug, D-Sub, 25 pin, PWB Mt	J03
02	JS13	Conn, Socket, D-Sub, 25 pin, P WB Mt	J04
02	LCFS01	Inductor, SMT, Choke, 600ohms, 2A, 0805	L031, L032, L034, L035, L098, L099, L120, L121
02	LCFS02	Inductor, SMT, Choke, 2000 ohm s, 80mA, 0805	L001, L002, L003, L004, L005, L006, L007, L008, L009, L010, L011, L012, L013, L014, L015, L016,, L017, L018, L019, L020, L021, L022, L023, L024, L025, L026, L027, L028, L029, L030, L033, L036,, L037, L038, L039, L040, L041, L042, L043, L044, L045, L046, L047, L048, L049, L050, L051, L052,, L053, L054, L055, L056, L057, L058, L059, L060, L061, L062, L063, L064, L065, L066, L067, L068,, L069, L070, L071, L072, L073, L074, L075, L076, L077, L078, L079, L080, L081, L082, L083, L084,, L085, L086, L087, L088, L089, L090, L091, L092, L093, L094, L095, L096, L097, L100, L101, L102,, L103, L104, L105, L106, L107, L108, L109, L110, L111, L112, L113, L114, L115, L116, L117, L118,, L119, L122, L123, L124, L125, L126, L127, L128, L129, L130, L131, L132
02	QDLS01	Diode, SMT, LED, Green, (560nm), 0603	DS17, DS18
02	QDLS03	Diode, SMT, LED, Red, (660nm), 0603	DS01, DS02, DS03, DS04, DS05, DS06, DS07, DS08
02	QDLS07	Diode, SMT, LED, Amber, (592nm), 0603	DS09, DS10, DS11, DS12, DS13, DS14, DS15, DS16
02	QDSS01	Diode, SMT, Schottky, 30V, 0.2A, SOD-323	CR24, CR25, CR26, CR27, CR28, CR29, CR30, CR31, CR32, CR33, CR34, CR35, CR36, CR37, CR38, CR39,, CR40, CR41, CR44, CR45, CR48, CR49, CR50, CR51, CR54, CR55, CR58, CR59, CR60, CR61, CR64, CR65
02	QR70	Suppressor, Transient Voltage, SMT 60V Clamp	CR01, CR02, CR03, CR04, CR05, CR06, CR07, CR08, CR09, CR10, CR11, CR12, CR13, CR14, CR15, CR16,, CR17, CR18, CR19, CR20, CR21, CR22, CR23, CR42, CR43, CR46, CR47, CR52, CR53, CR56, CR57, CR62, CR63

Component Lvl. StockCode	Description	Reference Designation
02 RAD21	Resistor, SMT, MF, 475 Ohms, 1% 1/4W	R01, R02, R03, R04, R05, R06, R07, R08, R09, R10, R11, R12, R13, R14, R15, R16, R17, R18, R19, R20,, R21, R22, R23, R24 R25, R26, R27, R28, R29, R30, R32, R60, R61, R62, R63, R64, R65, R66, R67, R68,, R69, R70, R71, R72, R73, R74, R75, R76 R77, R78, R79, R80, R81, R82, R83, R84, R85, R86, R87, R88, R89, R90
02 RAD27	Resistor, SMT, MF, 1500 Ohms, 1% 1/4W	R35, R36, R37, R38, R41, R42, R44, R45, R47, R48, R49, R50, R53, R54, R55, R56
02 RAD55Z	Resistor,SMT,150 Ohms,, 1%,2W	R51, R52
02 RAD75	Resistor, SMT, 2 Ohms, 5%, 1/4 W, 1206	R33, R34, R58, R59
02 RFFS40	Resistor,SMT,MF,1500ohms,1%, 1/10W,0603	R57, R92
02 RFFS50	Resistor,SMT,MF,10.0Kohms,1%, 1/10W,0603	R39, R40, R43, R46
02 SD77	Switch, SMT, SPST, Momentary, w/ESD gnd	S01, S02, S03, S04, S05, S06, S07, S08, S09, S10

01 **NARF71D**	**Final Assy, 5kW NVLT/GV (Basic)**	
02 206-5914	Tyrap Anchor Assy	
02 219-8055	Ferrite Clamp Assy	L01, L02
02 219-8059	AC Ferrite Bracket Assy	L05
03 219-8055	Ferrite Clamp Assy	
02 219-8101-12	Cableset Assy, 5kW NVLT/GV	
03 JDP24	Conn, Coax, BNC, Plug, 50ohm, Crimp	W12P1, W12P2, W13P1, W13P2
03 JF33	Conn, Coax, BNC, Plug,50ohm,Crimp, RG58/303	W06P2, W07P2
03 JT104	Conn, Coax, SMA, Plug, Crimp, RG58	W06P1, W07P1, W08P1, W09P1, W09P2, W10P1, W10P2, W30P1, W30P2
03 JT12	Conn, Coax, N, Plug, Crimp, RG 142	W16P1, W16P2
03 JT13	Conn, Coax, Jack, BNC, Crimp	W08J1
03 UA129	Cable, 3ft, 9-pin D-sub, M/F Straight-Through	W02
03 UA183	Cable, 6.5ft, 15-pin, HD, D-Su b, M/M, Str-Thru	W03
03 UA196	Cable, 1ft, 9-pin, D-sub, M/F, Straight-Through	W04, W05
02 219-8104	AC Present LED Assy NVLT/GV	
03 BAP44	LED, Pilot Light, Amber, 230 Vac	DS01, DS02, DS03
02 219-8106-08	DC Cable Set Assy, 5kW NVLT/GV	
02 219-8108-08	AC/LV Cable Set Assy, 5kW NVLT/GV	
03 JT149	Connector,Plug, 2 pos, Socket, 20A, 600V, 7.62mm,	P03, P04, P05
02 219-8978-05	Ancillary Kit, NVLT/GV 3.5-10kW	

Component Lvl. StockCode	Description	Reference Designation
03 175-5030	Equipment Hardware Kit (Imperi al)	
03 175-5030-03	Equipment Hardware Kit (Metric)	
03 211-5060	Interlock Jumper Wire	
02 JR56	Pwr Dist Block, 175A, 2/0-8AWG x 1, 4-14 AWG x 4	TB01
02 NAA61C	RF Power Module Assy, LDMOS (Ruggedized)	A08, A09
03 206-5914	Tyrap Anchor Assy	
03 211-5015	Wire Jumper	
03 219-5017	Wire Jumper	
03 JA44	Conn, Coax, Recept, 7/16 DIN, Panel,50ohm	J01
03 NAPA31C	PA PWB Assy, LDMOS (QAP66)	A01, A02, A03, A04
04 CS94	Capacitor, SMT, Porcelain,36pF 500V, 2%	C18
04 CS95	Capacitor, SMT, Porcelain,15pF 500V, 2%	C15
04 CS96	Capacitor, SMT, Porcelain, 2pF 500V, +/-0.1pF	C14
04 CT52	Capacitor,SMT,Ceramic,470pF, 200V,10%	C17
04 CT53	Capacitor,SMT,Ceramic,0.001uF, 50V,10%	C08, C10, C12, C16
04 CT66	Capacitor, SMT, Ceramic, 0.1uF 10%, 100V	C06, C20
04 CT74	Cap, SMT, Ceramic, 10uF, X7R, 100V, Stacked	C21, C22
04 CT75	Cap, SMT, Electrolytic, 470uF, 20%, 63VDC, Low ESR	C01, C02, C03, C04, C05
04 CT79	Capacitor, SMT, Ceramic,0.01uF 50V, 10%	C11, C13
04 FA64	Fuse, SMT, 125VAC, VDC, 30A, Fast Acting	F01
04 LS26	Inductor, SMT, 82nH, 2%, 2.5A, 4.20mm H x 4.95mm	L05
04 LS40	Inductor, SMT, 5nH, 5%, Mini Spring	L01, L03
04 LS41	Inductor, SMT, 100nH, 5%, Midi Spring	L02
04 QAP66	Transistor, FET, LDMOS, Dual, Ruggedized	Q01
04 QDSS01	Diode, SMT, Schottky, 30V, 0.2A, SOD-323	CR01
04 QDZS01	Diode,SMT,Zener,5.1V,5%,3W,SMB	CR02
04 RAD45	Resistor, SMT, MF, 47.5K Ohms, 1% 1/4W	R01
04 RAD49Z	Resistor,SMT,MF,10ohms, 1%,2W	R02
04 RAD54Z	Resistor,SMT,4.7 ohms, 5%,2W	R04, R05
04 RAD80	Resistor, SMT,10k Ohms, 1%, 1W 2512	R03
04 TZ118	Transformer, Gate Drive, VHF, 3T/1 Turn	T03
04 WE54	Cable, Coax, 12 Ohm, 600V, 200 C, TFE	T02A, T02B
04 WE56	Cable, Coax, 50 Ohm, 70% VP, 150C, PTFE, 11mm Min	T01
03 NAPH05	Splitter/Interface PWB Assy	A05

Component Lvl.	StockCode	Description	Reference Designation
04	CCFS01	Cap,SMT,Ceramic,0.001uF,10%,50V,X7R,0603	C14
04	CCFS04	Cap,SMT,Ceramic,0.01uF,10%,50V,X7R,0603	C01, C02, C03, C04, C05, C06, C07, C08, C09, C10, C11, C12, C13, C15, C16, C17, C18, C19, C20, C21,, C22, C23, C28, C29 C30, C31, C32, C33, C34, C35, C36, C37, C38, C39, C40
04	CT50	Capacitor,SMT,Ceramic,0.01uF, 100V,10%	C24, C25, C26, C27
04	CT65	Cap, SMT, Ceramic, 6.8pF, 50V, +/-0.25pF, 1206	C42
04	JT139	Terminal Block, 4-Pos, Tri-Bar rier, 30A, PWB Moun	TB01
04	JU60	MTA, Keyed Square Post Header Assy, 3 pin	J01, J02, J03, J04, J05, J06
04	LS34	Inductor, SMT, 28nH, 2%, 4A 3.15mm H x 6.86mm L	L01
04	QDLS04	Diode,SMT,LED,Bicolor,Red/ Green,1210	DS01
04	QDSS01	Diode, SMT, Schottky, 30V, 0.2A, SOD-323	CR01
04	RAD15	Resistor, SMT, MF, 150 Ohms, 1% 1/4W	R06, R07
04	RAD17	Resistor, SMT, MF, 221 Ohms, 1% 1/4W	R01, R02
04	RFFS44	Resistor,SMT,MF,3320ohms,1%, 1/10W,0603	R08
04	RT57	Resistor, SMT, AIN, 100 ohms, 2%, 30W, 3725	R03, R05
04	RT60	Resistor, Chip, AIN, 50 Ohm, 2%, 30W, 3725	R04
04	RX65	Thermister, PTC, SMT, 2920, 0.3-0.95 Ohm, 60V Max,	RT01, RT02, RT03, RT04, RT05, RT06
04	SD64	Switch, Rocker, Right Angle, SPDT, ON-ON	S01
03	NAPH06	Combiner PWB Assy (LHS)	A06
04	CCFS68	Cap, SMT, Ceramic, 1000pF, 5%, 100V, C0G, 1206	C01
04	CX40	Cap, SMT, Ceramic, 8.2 +/-0.25 pF, 50V, COG, 0805	C04
04	LS34	Inductor, SMT, 28nH, 2%, 4A 3.15mm H x 6.86mm L	L01
04	QK53	Diode, SMT, Shottky, 70V, 15mA , SOD-123	CR01
04	RAD15	Resistor, SMT, MF, 150 Ohms, 1% 1/4W	R08, R09
04	RAD31	Resistor, SMT, MF, 3320 Ohms, 1% 1/4W	R07
03	PR82C	PWB Detail, Combiner (RHS) AD350A-12011	A07
03	RT69	Resistor, (BeO), Flange Mount, Film, 50 Ohms, 5%,	A06R1, A06R2, A06R3, A06R4, A06R5, A06R6, A07R1, A07R2
03	RX49	Thermistor,-30/105ºC,10Kohms@ 25ºC,Neg,Bvalue 3435	RT01
03	UX158	Coupler, Hybrid, 90 degrees, 3dB, 600W, Caseless	A05U1
03	ZAP50	Fan, 80mm, Brushless, 48Vdc, EMI Caps, Tach w/conn	B01, B02, B03, B04, B05, B06
02	NAF119A/03	Combiner/Filter Assy, 5kW	A12
03	HL53	Nut, Hex, Panel, 3/8-32 x 1/10", Brass Ni Plate	J05
03	HM63	Washer, Tooth Internal, 3/8 x 1/2 OD, Phos. Bronze	J05
03	JA52	Conn, Coax, N, Recept, 50 ohm	J05

Component Lvl. StockCode	Description	Reference Designation
03 JA82	Conn, 7/16 DIN, Plug, 19.51mm Ferrule, Flange Mt.	J01
03 JA83	Conn, 7/16 DIN, Plug, 14.73mm Ferrule, Flange Mt.	J02
03 NAF118	Filter Assy, 10kW (LHS)	A01
04 206-6102	Inductor Assy	L02
02 NAFP109B	Power Probe Assy, NVLT/GV (DC REFLD)	A15
03 206-6520	Refld Power Probe PWB Assy	A02
04 JN60	Conn, Receptacle, Right Angle, SMA, PWB Mount	J01
04 RAD52	Resistor,2512 SMT,100 ohms, 1%,1W,	R01, R03
03 206-6522	RF Monitor Probe PWB Assy	A03
04 JN60	Conn, Receptacle, Right Angle, SMA, PWB Mount	J01
04 RAD23	Resistor, SMT, MF, 681 Ohms, 1% 1/4W	R02
04 RAD52	Resistor,2512 SMT,100 ohms, 1%,1W,	R01, R03
03 206-6524	Fwd Power/RF Sample Probe PWB Assy	A01, A04, A05
04 JN60	Conn, Receptacle, Right Angle, SMA, PWB Mount	J01
04 RAD23	Resistor, SMT, MF, 681 Ohms, 1% 1/4W	R02
04 RAD52	Resistor,2512 SMT,100 ohms, 1%,1W,	R01, R03
03 219-6520	DC Refld Power Probe PWB Assy	A06
04 CCFS01	Cap,SMT,Ceramic,0.001uF,10%,50V,X7R,0603	C01
04 JN60	Conn, Receptacle, Right Angle, SMA, PWB Mount	J01
04 QK53	Diode, SMT, Shottky, 70V, 15mA , SOD-123	CR01
04 RAD31	Resistor, SMT, MF, 3320 Ohms, 1% 1/4W	R04
04 RAD52	Resistor,2512 SMT,100 ohms, 1%,1W,	R01, R03
02 NAI22A/01	RF Drive Splitter/Changeover Assy, 5kW NVLT/GV	A07
03 NAPH09/01A	RF Drive Splitter/Changeover PWB Assy, NVLT	A01
04 CCFS04	Cap,SMT,Ceramic,0.01uF,10%,50V,X7R,0603	C01, C02, C05, C06
04 CCFS68	Cap, SMT, Ceramic, 1000pF, 5%, 100V, C0G, 1206	C04
04 CX40	Cap, SMT, Ceramic, 8.2 +/-0.25 pF, 50V, COG, 0805	C03
04 JQ34	Conn, Socket, D-Sub, 9 pin, PW B Mt	J03
04 JS21	Conn, BNC, Recept, Rt Angle, P WB Mt	J01, J02
04 KB44	Relay, Coaxial, SPDT, 12VDC	K01
04 LS34	Inductor, SMT, 28nH, 2%, 4A 3.15mm H x 6.86mm L	L01
04 QDRS01	Diode,SMT,Switching,250V,0.2A, SOD-323	CR01
04 QK53	Diode, SMT, Shottky, 70V, 15mA , SOD-123	CR02
04 RAD14	Resistor, SMT, MF, 121 Ohms, 1%, 1/4W, 1206	R06

Component Lvl. StockCode	Description	Reference Designation
04 RAD19	Resistor, SMT, MF, 332 Ohms, 1% 1/4W	R05
04 RAD31	Resistor, SMT, MF, 3320 Ohms, 1% 1/4W	R04
04 RAD72	Resisitor, SMT, MF, 0.0 Ohms, Jumper, 1206	R02
03 NAPH10	2-Way RF Drive Splitter/Atten PWB Assy (NV5LT)	A02
04 JS21	Conn, BNC, Recept, Rt Angle, P WB Mt	J01, J02
03 RT69	Resistor, (BeO), Flange Mount, Film, 50 Ohms, 5%,	A2R1
03 RX49	Thermistor,-30/105ºC,10Kohms@ 25ºC,Neg,Bvalue 3435	RT01
03 UX158	Coupler, Hybrid, 90 degrees, 3dB, 600W, Caseless	A2U1
02 NAL14	Reject Load Assy,1-Input 1500W , 5kW NVLT/GV	A13
03 206-5913	Ribbon Clamp Assy	
03 206-8080	2 Input Reject PWB Assy	A01
04 CCFS01	Cap,SMT,Ceramic,0.001uF,10%,50V,X7R,0603	C01, C02
04 JQ54	Conn, Header, Ribbon Cbl, 10- Pin	J01
04 QDSS01	Diode, SMT, Schottky, 30V, 0.2A, SOD-323	CR01, CR02
04 RAD17	Resistor, SMT, MF, 221 Ohms, 1% 1/4W	R19, R20, R22, R23
04 RAD31	Resistor, SMT, MF, 3320 Ohms, 1% 1/4W	R21, R24
03 219-6252	Ribbon Cable Assy - NAL14	
04 JP50	Conn, Recept, Ribbon Cable, 10 pin	W1P01, W1P02
03 JDP21	Conn, Coax, N, Recept, Panel, 50ohm	J01
03 RT69	Resistor, (BeO), Flange Mount, Film, 50 Ohms, 5%,	A1R01, A1R02, A1R03, A1R07, A1R08, A1R09, A1R13, A1R14, A1R15
02 NAPC158B	Module Control/Interface PWB Assy (NVLT/GV)	A03
03 CCFS01	Cap,SMT,Ceramic,0.001uF,10%,50V,X7R,0603	C002, C005, C039, C040, C041, C043, C051, C074, C124, C128, C129, C130, C132, C135, C154, C163,, C167, C192, C201, C206, C207, C213, C217, C239, C247, C302, C303, C304, C313, C318, C338, C360,, C362, C363, C364, C423, C424, C425, C426, C461, C467, C508, C511, C512, C513, C514, C515, C516,, C606, C607, C608, C609, C659, C664, C706
03 CCFS04	Cap,SMT,Ceramic,0.01uF,10%,50V,X7R,0603	C079, C090, C095, C096, C194, C244, C294, C352, C355, C356, C358, C375, C415, C418, C419, C421,, C448, C500, C503, C504, C506, C534, C554, C555, C556, C557, C565, C568, C595, C598, C599, C601,, C612, C633, C643, C658, C668
03 CCFS05	Cap,SMT,Ceramic,0.022uF,10%,50 V,X7R,0603	C275, C277, C296
03 CCFS10	Cap,SMT,Ceramic,1uF,10%,25V,X7R,1206	C048, C064, C082, C085, C253, C254

Component Lvl.	StockCode	Description	Reference Designation
03	CCFS23	Cap,SMT,Ceramic,18pF,2%,50V, C0G,0603	C103, C104
03	CCFS24	Cap,SMT,Ceramic,22pF,2%,50V, C0G,0603	C009, C010, C011, C012, C098, C099, C100, C101, C171, C175, C176, C177, C178, C270, C271, C272,, C273, C376, C377, C385, C386, C387, C388, C389, C390, C391, C393, C394, C399, C400, C436, C437,, C438, C439, C442, C451, C452, C453, C454, C455, C457, C458, C460, C468, C469, C473, C475, C479,, C482, C484, C487, C537, C538, C539, C540, C543, C544, C545, C546, C547, C549, C550, C552, C563,, C564, C574, C575, C585, C588, C603, C610, C615, C636, C637, C638, C639, C641, C644, C645, C646,, C647, C648, C650, C651, C652, C655, C656, C661, C662, C666, C669, C670, C671, C680, C681, C682,, C683, C686, C688, C689, C693, C697, C702, C703
03	CCFS32	Cap,SMT,Ceramic,100pF,2%,50V,C0G,0603	C022, C075, C089, C114, C115, C168, C173, C191, C230, C260, C287, C392, C456, C464, C548, C614,, C640, C649, C676
03	CCFS34	Cap,SMT,Ceramic,220pF,2%,50V, C0G,0603	C268, C269
03	CCFS36	Cap,SMT,Ceramic,330pF,2%,50V, C0G,0603	C288, C291
03	CCFS37	Cap,SMT,Ceramic,390pF,2%,50V,C0G,0603	C189, C236
03	CCFS38	Cap,SMT,Ceramic,470pF,2%,50V, C0G,0603	C018, C019, C020, C021, C110, C111, C112, C113, C172, C183, C184, C185, C186, C283, C284, C285,, C286, C370, C371, C372, C373, C374, C379, C380, C381, C382, C383, C384, C401, C402, C432, C433,, C434, C435, C441, C443, C444, C445, C446, C447, C449, C450, C459, C470, C471, C472, C474, C477,, C483, C486, C488, C524, C525, C526, C527, C529, C530, C531, C532, C533, C535, C536, C551, C566,, C567, C573, C576, C586, C589, C604, C611, C616, C623, C624, C625, C626, C628, C629, C630, C631,, C632, C634, C635, C642, C653, C654, C657, C660, C663, C667, C672, C673, C674, C675, C678, C679,, C684, C685, C687, C690, C694, C698, C701, C704
03	CCFS42	Cap,SMT,Ceramic,1000pF,2%,50V, C0G,0805	C193, C208, C243, C251

Component Lvl.	StockCode	Description	Reference Designation
03	CCFS52	Cap, SMT, Ceramic, 0.1uF, 10%, 25V X7R, 0603	C003, C004, C013, C014, C015, C016, C028, C029, C030, C031, C032, C033, C044, C045, C046, C047,, C049, C050, C052, C053, C054, C055, C056, C057, C058, C059, C060, C061, C062, C063, C066, C069,, C070, C071, C072, C073, C076, C077, C078, C080, C084, C086, C091, C097, C102, C105, C106, C107,, C108, C116, C117, C118, C119, C120, C121, C133, C134, C136, C137, C138, C139, C140, C141, C142,, C143, C144, C145, C146, C147, C148, C149, C150, C151, C152, C153, C155, C156, C157, C158, C159,, C160, C162, C164, C165, C166, C169, C170, C174, C179, C180, C181, C182, C187, C188, C195, C196,, C197, C198, C199, C200, C202, C203, C214, C215, C216, C218, C219, C220, C221, C222, C223, C224,, C225, C226, C227, C228, C229, C231, C234, C235, C237, C238, C241, C242, C245, C246, C248, C249,, C250, C255, C274, C276, C278, C279, C280, C281, C289, C290, C292, C293, C298, C299, C300, C301,, C305, C306, C316, C317, C319, C320, C321, C322, C323, C324, C325, C326, C327, C328, C329, C330,, C333, C334, C335, C336, C337, C339, C340, C341, C345, C347, C348, C349, C350, C351, C353, C354,, C357, C359, C361, C365, C395, C396, C397, C398, C403, C404, C405, C406, C407, C408, C409, C410,, C411, C412, C413, C414, C416, C417, C420, C422, C427, C462, C463, C465, C466, C476, C478, C480,, C481, C485, C489, C490, C491, C492, C493, C494, C495, C496, C497, C498, C499, C501, C502, C505,, C507, C509, C510, C517, C519, C541, C542, C553, C558, C559, C560, C561, C562, C569, C570, C571,, C572, C577, C578, C579, C580, C582, C583, C584, C587, C590, C591, C592, C593, C594, C596, C597,, C600, C602, C605, C613, C617, C618, C665, C692, C696, C700
03	CCFS53	Cap, SMT, Ceramic,47uF,20%, 6.3V, 1210	C232, C262, C265
03	CCFS57	Cap,SMT,Ceramic,10uF,20%,6.3V, X5R,0805	C240, C518
03	CCFS60	Cap,SMT,Ceramic,1uF,10%,100V, X7R,1210	C008, C017, C023, C035, C038, C088, C109, C123, C127, C161, C190, C205, C211, C259, C282, C308,, C311, C342, C343, C378, C440, C528, C627, C677
03	CCFS61	Cap,SMT,Ceramic,0.001uF,10%, 100V,X7R,0805	C036, C042, C125, C131, C209, C212, C309, C312, C344, C691, C695, C699
03	CCFS62	Cap, SMT, Ceramic, 10uF, 10%, 25V	C261

Component Lvl.	StockCode	Description	Reference Designation
03	CT50	Capacitor,SMT,Ceramic,0.01uF, 100V,10%	C034, C037, C122, C126, C204, C210, C307, C310, C346, C366, C367, C368, C369, C428, C429, C430,, C431, C520, C521, C522, C523, C619, C620, C621, C622
03	CT57	Capacitor, SMT, Al Electroytic 330uF, 25VDC,ESR 0.	C257, C258
03	CT64	Capacitor, SMT, Ceramic, 2.2uF 10%, 100V, X7R, 181	C026, C027, C067, C068, C087, C092, C093, C094, C256, C263, C266, C267, C295, C297, C314, C315
03	CT75	Cap, SMT, Electrolytic, 470uF, 20%, 63VDC, Low ESR	C001, C065, C081, C083, C233, C252, C332
03	CX36	Capacitor, SMT, Tantalum, 47uF 10%, 25V	C264
03	FA46	Fuse,SMT,Fuse Block,3A Very Fast Acting,Installed	F08
03	FA56	Fuse, SMT, Fuse Block, 7A VeryFast Acting Installe	F01, F02, F05, F06
03	FA69	Fuse, SMT, Fuse Block, 10A, Very Fast Acting, Inst	F03, F04, F07
03	HAC55	Terminal,PC Screw 10-32,30 Amp	E01, E02, E03, E04, E05, E06, E07, E08, E09, E10
03	HAJ66	Terminal, SMT, Test Point, PWB	TP02, TP14, TP15, TP23, TP31, TP34, TP39, TP40, TP43, TP4 TP45, TP46, TP51, TP54, TP55, TP56
03	JF35	Conn, BNC, Recept, PWB Mt	J06, J07, J11, J12, J13, J14
03	JF47	Conn, Header,Square Post,Gold, Dual,40-pin	J09
03	JMT01	Connector, Modular, RJ45, Vert , PWB, Shld, 50u Au	J16, J17, J18
03	JN86	Conn, Edge Card, 72 Contacts, Dual Row, 30u, Gold,	J21, J22, J23, J24
03	JQ16	Conn, Header, SIP, 12 Pin Breakaway, 10 Ctr	J10
03	JQ33	Conn, Plug, D-Sub, 9 pin, PWB Mt	J01, J04, J15
03	JQ34	Conn, Socket, D-Sub, 9 pin, PW B Mt	J03, J08, J19
03	JQ54	Conn, Header, Ribbon Cbl, 10- Pin	J02
03	JS129	Conn, Socket, D-Sub, HD15pin, 90deg, PWB	J05, J20
03	JT160	Conn, SMA, Straight, PWB Mt	J25
03	LCFS01	Inductor, SMT, Choke, 600ohms, 2A, 0805	L008, L009, L010, L011, L033, L040, L041, L049, L053, L057, L058, L059, L073, L074, L089, L096,, L102, L105, L107, L108, L126, L127, L134, L135, L136, L137, L138, L145, L148, L149, L150, L151,, L152, L155, L158, L159, L160, L177, L184, L191, L194, L196, L198, L204, L205, L222, L223, L225, L227

Component Lvl.	StockCode	Description	Reference Designation
03	LCFS02	Inductor, SMT, Choke, 2000 ohm s, 80mA, 0805	L001, L002, L003, L004, L005, L006, L007, L012, L013, L014, L015, L016, L017, L018, L019, L020,, L021, L022, L023, L024, L025, L026, L027, L028, L029, L030, L031, L032, L034, L035, L036, L037,, L038, L039, L042, L043, L044, L045, L046, L047, L048, L050, L051, L054, L055, L056, L060, L061,, L063, L064, L066, L067, L069, L070, L071, L077, L078, L079, L080, L083, L084, L085, L086, L087,, L088, L090, L091, L092, L093, L094, L095, L097, L098, L099, L100, L101, L103, L104, L106, L112,, L113, L114, L115, L116, L118, L119, L120, L121, L122, L123, L124, L125, L131, L132, L133, L139,, L140, L141, L142, L143, L144, L146, L147, L153, L154, L156, L157, L166, L167, L168, L169, L172,, L173, L174, L175, L176, L178, L179, L180, L181, L182, L183, L186, L187, L188, L189, L190, L192,, L193, L195, L199, L200, L201, L202, L203, L206, L207, L208, L209, L210, L211, L212, L213, L214,, L215, L216, L217, L218, L219, L220, L221, L224, L226, L228, L229, L230, L231, L232, L233, L234,, L235, L236, L237, L238, L239, L240, L241, L242, L243, L244, L245, L246, L247, L248, L249, L250
03	LS22	Choke,SMT,Common Mode,2200 ohm ,200mA,1206	L062, L065, L068, L076, L081, L082, L109, L110, L111, L117, L128, L129, L130, L165, L170, L171,, L185, L197
03	LS45	Inductor, SMT, Shielded, 33uH, 3.3A RMS	L052, L163, L164
03	LS47	Inductor, SMT, Shielded, 15uH, 5A RMS	L072, L075, L161, L162
03	QBNS01	Transistor,SMT,NPN,Switch/Amp ,SOT-23	Q01, Q06, Q07, Q08, Q09, Q15, Q16, Q17
03	QDLS01	Diode, SMT, LED, Green, (560nm), 0603	DS02, DS03, DS04, DS05
03	QDLS07	Diode, SMT, LED, Amber, (592nm), 0603	DS01
03	QDRS01	Diode,SMT,Switching,250V,0.2A, SOD-323	CR01, CR02, CR07, CR08, CR09, CR15, CR17, CR18, CR19, CR20, CR21, CR26, CR29, CR30, CR31, CR32,, CR33, CR34, CR37, CR38, CR51, CR52, CR53, CR54, CR55, CR65, CR66, CR67, CR69, CR70, CR71, CR72,, CR73, CR74, CR77, CR78, CR79, CR80, CR81, CR82, CR83, CR84, CR86, CR87
03	QDS02	Diode, SMT, Schottky, 3.5Ax2, 100V DPAK	Q02, Q05, Q11, Q12, Q13, Q14
03	QDSS01	Diode, SMT, Schottky, 30V, 0.2A, SOD-323	CR03, CR04, CR05, CR06, CR89, CR90
03	QDSS03	Diode, SMT, Shottky, 40V, 3A, SMA	CR85, CR88
03	QMN01	Transister, FET, SMT, N-ch, 100V, DPAK	Q03, Q04, Q10
03	QR70	Suppressor, Transient Voltage, SMT 60V Clamp	CR10, CR11, CR12, CR13, CR14, CR16, CR22, CR23, CR24, CR25, CR27, CR28, CR35, CR36, CR39, CR40,, CR41, CR42, CR43, CR44, CR45, CR46, CR47, CR48, CR49, CR50, CR56, CR57, CR58, CR59, CR60, CR61,, CR62, CR63, CR64, CR68, CR75, CR76

Component Lvl.	StockCode	Description	Reference Designation
03	RAD01	Resistor, SMT, MF, 10 Ohms, 1% 1/4W	R356, R402
03	RAD10	Resistor, SMT, MF, 56.2 Ohms, 1% 1/4W	R414, R418
03	RAD15	Resistor, SMT, MF, 150 Ohms, 1% 1/4W	R370
03	RAD17	Resistor, SMT, MF, 221 Ohms, 1% 1/4W	R074, R156, R161, R240, R253, R413, R423, R431, R535, R546, R551, R636, R651, R695, R706, R745
03	RAD21	Resistor, SMT, MF, 475 Ohms, 1% 1/4W	R001, R002, R003, R013, R020, R039, R040, R041, R051, R112, R175, R192, R193, R194, R197, R258,, R262, R269, R282, R288, R292, R306, R315, R318, R327, R328, R329, R330, R393, R436, R437, R438,, R447, R506, R533, R536, R537, R538, R539, R540, R541, R542, R543, R544, R545, R552, R553, R555,, R591, R593, R594, R595, R596, R597, R598, R599, R600, R601, R602, R612, R613, R620, R665, R670,, R672, R673, R674, R675, R676, R677, R678, R679, R680, R681, R708, R709, R719, R729, R743, R746,, R761, R763, R765, R766, R767, R768, R769, R770, R771, R772, R773, R774, R775, R777, R778, R781,, R788, R793, R795, R796, R797, R798, R804, R805
03	RAD27	Resistor, SMT, MF, 1500 Ohms, 1% 1/4W	R408, R716
03	RAD41	Resistor, SMT, MF, 22.1K Ohms, 1% 1/4W	R050, R084, R215, R361, R468, R508, R511, R557, R560, R625, R626, R721, R724, R744
03	RAD49Z	Resistor,SMT,MF,10ohms, 1%,2W	R420, R421, R760
03	RAD50Z	Resistor,SMT,MF,20ohms, 1%,2W	R042
03	RAD55Z	Resistor,SMT,150 Ohms,, 1%,2W	R469
03	RAD69	Resistor, SMT, 590 Ohms, 1%, 1 W, 2512	R331, R362, R382, R403
03	RAD75	Resistor, SMT, 2 Ohms, 5%, 1/4 W, 1206	R026, R046, R098, R140, R407, R412, R532, R534, R590, R592, R608, R669, R671, R712, R762, R764,, R794
03	RAD80	Resistor, SMT,10k Ohms, 1%, 1W 2512	R490, R493
03	RAE21	Resistor, SMT, MF, 49.9 Ohms, 1% 1/4W	R351, R400, R619, R621
03	RAE34	Resistor,SMT,MF,49.9R,1%,1/10W 0603	R085, R097, R099, R102, R198, R199, R299, R300, R301, R308, R710, R711
03	RFCS04	Resistor, SMT, 0.002 ohms, 1%, 5W	R027, R028, R029, R030, R177, R178, R179, R180, R311, R312, R313, R314, R424, R425, R426, R427
03	RFFS01	Resistor,SMT,MF,0.0ohms,Jumper ,0603	R021, R022, R048, R049, R116, R118, R119, R132, R141, R142, R255, R259, R272, R279, R286, R391,, R394, R404, R405, R406, R501, R573, R574, R578, R579, R728, R780, R785, R787, R800, R801, R806, R807
03	RFFS14	Resistor, SMT, MF, 10.0ohms, 1%, 1/10W, 0603	R146, R696, R697, R704
03	RFFS18	Resistor, SMT, MF, 22.1ohms, 1%, 1/10W, 0603	R103, R130, R401, R725, R726, R730, R731

Component Lvl.	StockCode	Description	Reference Designation
03	RFFS23	Resistor, SMT, MF, 56.2ohms, 1%, 1/10W, 0603	R549, R550
03	RFFS25	Resistor,SMT,MF,82.5ohms,1%, 1/10W,0603	R332, R383
03	RFFS26	Resistor, SMT, MF, 100ohms, 1%, 1/10W, 0603	R008, R017, R035, R036, R037, R038, R053, R054, R055, R056, R105, R106, R136, R181, R188, R189,, R190, R191, R195, R201, R202, R203, R204, R278, R305, R323, R324, R325, R326, R335, R336, R337,, R338, R399, R432, R433, R434, R435, R448, R449, R450, R457, R505, R513, R516, R517, R518, R519,, R520, R521, R522, R528, R529, R530, R531, R562, R565, R566, R567, R568, R569, R570, R571, R572,, R577, R586, R587, R588, R589, R631, R632, R633, R634, R637, R638, R640, R643, R644, R645, R646,, R647, R648, R649, R658, R659, R660, R661, R717, R720, R733, R736, R737, R738, R739, R740, R741,, R742, R756, R757, R758, R759, R782, R789
03	RFFS28	Resistor, SMT, MF, 150ohms, 1%, 1/10W, 0603	R228
03	RFFS31	Resistor, SMT, MF, 274ohms, 1%, 1/10W, 0603	R321, R378
03	RFFS32	Resistor, SMT, MF, 332ohms, 1%, 1/10W, 0603	R411
03	RFFS34	Resistor,SMT,MF,475ohms,1%, 1/10W,0603	R415, R416, R419, R422
03	RFFS36	Resistor, SMT, MF, 681ohms, 1%, 1/10W, 0603	R073, R079, R158, R160, R239, R252, R635, R650, R700, R705
03	RFFS37	Resistor, SMT, MF, 825ohms, 1%, 1/10W, 0603	R052, R096, R230, R375, R470, R509, R510, R558, R559, R629, R630, R722, R723, R751
03	RFFS38	Resistor,SMT,MF,1000ohms,1%, 1/10W,0603	R031, R064, R065, R107, R114, R129, R139, R182, R183, R226, R231, R233, R275, R512, R556, R561,, R639, R663, R664, R732, R749, R750, R802
03	RFFS39	Resistor,SMT,MF,1210ohms,1%, 1/10W,0603	R439
03	RFFS40	Resistor,SMT,MF,1500ohms,1%, 1/10W,0603	R086, R241, R364, R479
03	RFFS41	Resistor,SMT,MF,1820ohms,1%, 1/10W,0603	R443
03	RFFS42	Resistor,SMT,MF,2210ohms,1%, 1/10W,0603	R063, R381
03	RFFS44	Resistor,SMT,MF,3320ohms,1%, 1/10W,0603	R442, R446, R713
03	RFFS46	Resistor, SMT, MF, 4750ohms, 1%, 1/10W, 0603	R009, R018, R061, R062, R069, R070, R071, R072, R127, R157, R162, R212, R213, R214, R217, R221,, R287, R290, R298, R304, R333, R347, R348, R349, R350, R384, R454, R464, R465, R466, R467, R523,, R524, R525, R526, R527, R547, R554, R582, R583, R584, R585, R606, R607, R652, R653, R654, R655,, R703, R747, R748, R752, R753, R754, R755, R779, R783, R784, R786, R790, R791
03	RFFS47	Resistor, SMT, MF, 5620ohms, 1%, 1/10W, 0603	R220, R322, R379

Component Lvl.	StockCode	Description	Reference Designation
03	RFFS50	Resistor,SMT,MF,10.0Kohms,1%, 1/10W,0603	R005, R006, R007, R011, R015, R016, R019, R024, R025, R032, R033, R034, R044, R045, R047, R057,, R058, R059, R060, R066, R075, R078, R080, R083, R092, R093, R094, R095, R100, R101, R104, R115,, R120, R125, R126, R131, R133, R134, R135, R138, R145, R148, R149, R150, R151, R153, R155, R159,, R163, R166, R167, R169, R170, R171, R176, R184, R185, R186, R187, R196, R200, R206, R207, R208,, R209, R216, R219, R222, R225, R227, R229, R232, R234, R235, R238, R247, R248, R249, R250, R251,, R254, R256, R257, R260, R261, R263, R264, R271, R273, R277, R280, R281, R283, R285, R291, R296,, R297, R302, R303, R317, R319, R320, R339, R340, R341, R342, R343, R344, R352, R355, R357, R360,, R363, R371, R372, R373, R374, R376, R377, R380, R390, R395, R397, R398, R409, R410, R417, R428,, R429, R430, R440, R444, R458, R459, R460, R461, R471, R474, R475, R478, R486, R487, R488, R489,, R491, R492, R498, R502, R504, R515, R548, R564, R605, R611, R614, R616, R617, R618, R622, R623,, R624, R642, R656, R657, R662, R666, R667, R668, R682, R683, R684, R685, R686, R687, R688, R689,, R690, R693, R694, R698, R699, R701, R702, R707, R714, R715, R735, R776, R799, R803
03	RFFS51	Resistor,SMT,MF,12.1Kohms,1%, 1/10W,0603	R121, R152, R154, R164, R165, R274, R396, R441, R445, R451, R503
03	RFFS52	Resistor,SMT,MF,15.0Kohms,1%, 1/10W,0603	R113, R124, R143, R295, R310, R604, R610
03	RFFS53	Resistor,SMT,MF,18.2Kohms,1%, 1/10W,0603	R004, R014, R023, R043, R087, R242, R365, R480
03	RFFS55	Resistor,SMT,MF,27.4Kohms,1%, 1/10W,0603	R012, R168, R270, R284, R455
03	RFFS58	Resistor, SMT, MF, 47.5Kohms, 1%, 1/10W, 0603	R076, R077, R081, R082, R223, R224, R236, R237, R353, R354, R358, R359, R452, R453, R456, R472,, R473, R476, R477
03	RFFS62	Resistor,SMT,MF,100Kohms,1%, 1/10W,0603	R067, R068, R210, R211, R345, R346, R462, R463, R485
03	RFFS70	Resistor, SMT, MF, 475Kohms, 1%, 1/10W, 0603	R010, R334, R385, R392, R499, R507, R514, R563, R641, R734
03	RFFS72	Resistor, SMT, MF, 681Kohms, 1%, 1/10W, 0603	R089, R090, R109, R110, R244, R245, R266, R267, R367, R368, R387, R388, R482, R483, R495, R496
03	RFFS73	Resistor,SMT,MF,825Kohms,1%, 1/10W,0603	R123, R128, R144, R294, R309, R603, R609
03	RFFS75	Resistor, SMT, MF, 1.21Mohms, 1%, 1/10W, 0603	R088, R091, R108, R111, R243, R246, R265, R268, R366, R369, R386, R389, R481, R484, R494, R497
03	RT44	Thermistor, PTC, 3.30-5.21 Ohms, 60V Max, 0.17A Ho	RT01

Component Lvl.	StockCode	Description	Reference Designation
03	RX64	Thermistor, PTC, SMT, 2920, 0.35-1.4 Ohm, 50V Max,	RT03, RT04
03	SC52	Switch, DIP, SMT, Recessed, 6-way, SPST	S01
03	UC62	IC,SMT,Low Voltage Temp Sensor SO-8	U21
03	UD59	IC,SMT,Dual D Flip-Flop,TSSOP	U22
03	UD66	IC,SMT,Quad RS-422 DIFF Line Driver	U16
03	UD67	IC,SMT,Quad 2 to 1 DATA Sel/ Mux 3 States Outputs,	U17, U26
03	UD90	IC, SMT, High Side Gate Driver 4A, SO-8	U12, U20, U74
03	UDLS02	IC, SMT, CMOS, Octal Latch, SOIC-20	U45, U46
03	UDLS04	IC,SMT,CMOS,8-Bit Shft Reg,Par I/P, SOIC-16	U01, U09, U38, U65, U89
03	UDLS05	IC,SMT,CMOS,8-Bit Shft Reg,Par O/P, SOIC-16	U62, U73
03	UDMS14	IC, SMT, SRAM, 32Kx8, 3.3V, 28 -SOIC	U48
03	UDTS03	IC,SMT,RS-485 Transceiver,Sgl ,SOIC-8	U07, U49, U75, U76, U77, U78, U87
03	UDTS05	IC, SMT, RS-232 Transceiver, 3.3V, SO-16	U52
03	UDTS07	IC, SMT, Full Duplex RS485 RxTx, SOIC-8	U55
03	UG35	IC, CMOS, Hex Schmitt, Trigger Inverter, SOIC-14	U36
03	ULAS02	IC,SMT,Opamp,Quad,Rail-To-Rail ,SOIC-14	U02, U08, U13, U15, U18, U23, U37, U42, U44, U63, U64, U67, U69, U88, U91, U93
03	ULCS01	IC,SMT,Comparator,Quad,SOIC-14	U19, U54
03	UMAS01	IC,SMT,ADC,10-Bit,11-ch,SPI, SOIC-20	U10, U14, U43, U68, U92
03	UMDS01	IC,SMT,DAC,8-Bit,4-ch,SPI, SOIC-14	U11, U24, U41, U66, U90
03	UP112	IC, SMT, Step Down Reg., 75V, 3A, TSSOP-20	U81, U82
03	US19	IC, SMT, Digital Step Attenator, QFN-20	U57, U71
03	US23	IC, SMT, Power Shift Register, SOIC-16	U51
03	US30	IC, SMT, CMOS, Quad And Gate, SOIC-14	U25, U39, U40, U47, U53
03	US31	IC, SMT, CMOS, Quad Tri-State Buff, SOIC-14	U27, U30, U50
03	UT110	IC, Voltage Regulator, 1.5A, ADJ, Low Drop	U72
03	UT74	IC, Amplifier, Instrumentation	U03, U04, U05, U06, U32, U33, U34, U35, U58, U59, U60, U61, U83, U84, U85, U86
03	UT91	IC,SMT,Quad RS-422 Receiver, 16-SOIC	U28
03	UX110	IC, SMT, TruPwr Detect, LF-2.5 GHz, MSOP	U56, U70
03	UX144	IC, SMT, Micro, 128K, 3.3V, 100-CBGA	U31
03	UX83	IC,SMT,2.5V Reference,0.1%,SOT -23-6	U29
03	XFPS02Z	Crystal,SMT,Fund,Par Res, 32.768kHz	Y01
02	NAPI150A/01	Power Supply Interface PWB Assy NVLT/GV	A01

Component Lvl.	StockCode	Description	Reference Designation
03	CCFS01	Cap,SMT,Ceramic,0.001uF,10%,50V,X7R,0603	C021, C023, C026, C027, C040, C042, C044, C045, C056, C058, C063, C066, C067, C068, C069, C072,, C073, C074, C075, C076, C083, C085, C087, C088, C101, C103, C105, C106
03	CCFS04	Cap,SMT,Ceramic,0.01uF,10%,50V,X7R,0603	C017, C018, C019, C020, C036, C037, C038, C039, C051, C055, C057, C059, C060, C061, C062, C079,, C080, C081, C082, C097, C098, C099, C100
03	CCFS24	Cap,SMT,Ceramic,22pF,2%,50V, C0G,0603	C078
03	CCFS32	Cap,SMT,Ceramic,100pF,2%,50V,C0G,0603	C001
03	CCFS38	Cap,SMT,Ceramic,470pF,2%,50V, C0G,0603	C077
03	CCFS52	Cap, SMT, Ceramic, 0.1uF, 10%, 25V X7R, 0603	C007, C011, C012, C013, C014, C015, C016, C025, C028, C034, C035, C046, C052, C053, C070, C071,, C089, C095, C096, C107
03	CCFS57	Cap,SMT,Ceramic,10uF,20%,6.3V, X5R,0805	C033, C054, C094, C112
03	CT50	Capacitor,SMT,Ceramic,0.01uF, 100V,10%	C064, C065
03	CTFS02	Cap,SMT,Tantalum,1uF,10%,35V, 1411	C002
03	HAC130	1 Pin Screw Terminal, Power Tap M4 Surface Mount.	E01, E02, E03, E04, E05, E06, E07, E08, E09, E10, E11, E12, E13, E14, E15, E16, E17, E18, E19, E20,, E21, E22, E23, E24, E25, E26, E27, E28
03	HAJ66	Terminal, SMT, Test Point, PWB	TP01, TP04, TP12, TP13, TP25, TP28
03	HR26	Connector, Quick-Dis, M, 1/4 Tab, PWB	E29, E30
03	JA119	Conn, PwrBlade, 3ACP+4P+24S, Vertical Solder Recep	J02, J03, J04, J05, J06, J07, J08, J09, J10, J11
03	JS130	Conn, Socket, D-Sub, HD 15pin, Straight, PWB	J01
03	LCFS01	Inductor, SMT, Choke, 600ohms, 2A, 0805	L01, L03, L12, L13, L14, L15, L18, L19, L20, L21, L24, L25, L26, L27, L30, L31, L32, L33, L36, L37,, L38, L39
03	LCFS02	Inductor, SMT, Choke, 2000 ohm s, 80mA, 0805	L28, L29
03	LS22	Choke,SMT,Common Mode,2200 ohm ,200mA,1206	L02, L06, L09, L10, L11, L16, L17, L22, L23, L34, L35, L40, L41
03	QDLS01	Diode, SMT, LED, Green, (560nm), 0603	DS01, DS02
03	QR70	Suppressor, Transient Voltage, SMT 60V Clamp	CR01, CR02, CR03, CR04, CR05, CR06, CR07, CR08, CR09, CR10
03	QR81	Diode, SMT, TVS, Vw8.5V, Vb10.5V, Vc13.5V, SMF	CR11, CR12, CR13, CR14, CR15, CR16, CR17, CR18, CR19, CR20
03	RAD21	Resistor, SMT, MF, 475 Ohms, 1% 1/4W	R124
03	RAD55Z	Resistor,SMT,150 Ohms,, 1%,2W	R034, R056, R142, R164
03	RAD80	Resistor, SMT,10k Ohms, 1%, 1W 2512	R119, R120, R123, R125

Component Lvl.	StockCode	Description	Reference Designation
03	RFFS01	Resistor,SMT,MF,0.0ohms,Jumper ,0603	R002, R006, R009, R021, R023, R047, R049, R057, R089, R090, R126, R133, R135, R155, R157
03	RFFS23	Resistor, SMT, MF, 56.2ohms, 1%, 1/10W, 0603	R004, R005, R011, R012, R018, R019, R026, R029
03	RFFS26	Resistor, SMT, MF, 100ohms, 1%, 1/10W, 0603	R027, R028, R039, R040, R051, R052, R063, R064, R091, R099, R100, R101, R102, R115, R116, R117,, R118, R122, R137, R138, R147, R148, R159, R160, R169, R170
03	RFFS30	Resistor, SMT, MF, 221ohms, 1%, 1/10W, 0603	R015, R016
03	RFFS34	Resistor,SMT,MF,475ohms,1%, 1/10W,0603	R001, R008, R010, R014, R017, R020, R025, R033
03	RFFS44	Resistor,SMT,MF,3320ohms,1%, 1/10W,0603	R031, R042
03	RFFS45	Resistor,SMT,MF,3920ohms,1%, 1/10W,0603	R081, R084
03	RFFS46	Resistor, SMT, MF, 4750ohms, 1%, 1/10W, 0603	R013, R035, R037, R058, R060, R092, R093, R095, R097, R103, R105, R108, R109, R112, R113, R121,, R127, R129, R131, R143, R145, R165, R167
03	RFFS47	Resistor, SMT, MF, 5620ohms, 1%, 1/10W, 0603	R082, R085
03	RFFS49	Resistor,SMT,MF,8250ohms,1%, 1/10W,0603	R054, R066, R074, R080
03	RFFS50	Resistor,SMT,MF,10.0Kohms,1%, 1/10W,0603	R022, R024, R036, R038, R044, R046, R048, R050, R061, R107, R111, R134, R136, R146, R153, R154,, R156, R158, R168
03	RFFS51	Resistor,SMT,MF,12.1Kohms,1%, 1/10W,0603	R030, R032, R053, R055, R073, R079, R104, R106, R139, R141, R161, R163
03	RFFS52	Resistor,SMT,MF,15.0Kohms,1%, 1/10W,0603	R140, R150
03	RFFS53	Resistor,SMT,MF,18.2Kohms,1%, 1/10W,0603	R072, R078
03	RFFS54	Resistor,SMT,MF,22.1Kohms,1%, 1/10W,0603	R059, R068
03	RFFS55	Resistor,SMT,MF,27.4Kohms,1%, 1/10W,0603	R043, R067, R071, R077, R151, R173
03	RFFS56	Resistor, SMT, MF, 33.2Kohms, 1%, 1/10W, 0603	R162, R172
03	RFFS57	Resistor,SMT,MF,39.2Kohms,1%, 1/10W,0603	R041, R065, R149, R171
03	RFFS58	Resistor, SMT, MF, 47.5Kohms, 1%, 1/10W, 0603	R070, R076
03	RFFS62	Resistor,SMT,MF,100Kohms,1%, 1/10W,0603	R069, R075, R110, R114
03	RFFS66	Resistor, SMT, MF, 221Kohms, 1%, 1/10W, 0603	R144, R152
03	RFFS68	Resistor, SMT, MF, 332Kohms, 1%, 1/10W, 0603	R166, R174
03	UD82	IC, SMT, 2-Input Logic, UHS Univ Config SC70-6	U08
03	UDLS04	IC,SMT,CMOS,8-Bit Shft Reg,Par I/P, SOIC-16	U06, U07, U12, U13, U15, U16
03	UDTS03	IC,SMT,RS-485 Transceiver,Sgl ,SOIC-8	U01, U02, U03, U04
03	UR107	IC, Programmable Shunt Ref, 2.5V, TO-92	U05, U09, U14, U17
03	US23	IC, SMT, Power Shift Register, SOIC-16	U10, U11
02	NAX264	Fan Tray Assy (2-way) 5kW NVLT /GV	A14

Component Lvl. StockCode	Description	Reference Designation
03 NAPI155	Fan Tray Interface PWB Assy (2-way) (NV5LT)	A01
04 CCFS24	Cap,SMT,Ceramic,22pF,2%,50V, C0G,0603	C02, C03, C11, C15
04 CCFS32	Cap,SMT,Ceramic,100pF,2%,50V,C0G,0603	C01, C10, C14
04 CCFS38	Cap,SMT,Ceramic,470pF,2%,50V, C0G,0603	C06, C07, C12, C16
04 CCFS60	Cap,SMT,Ceramic,1uF,10%,100V, X7R,1210	C05, C09, C13
04 HAJ66	Terminal, SMT, Test Point, PWB	TP01, TP02
04 JQ33	Conn, Plug, D-Sub, 9 pin, PWB Mt	J01
04 JU60	MTA, Keyed Square Post Header Assy, 3 pin	J02, J03
04 LCFS01	Inductor, SMT, Choke, 600ohms, 2A, 0805	L01, L05, L06, L07, L11, L13, L15, L17
04 LCFS02	Inductor, SMT, Choke, 2000 ohm s, 80mA, 0805	L02, L03, L08, L09, L12, L14, L16, L18
04 RAD21	Resistor, SMT, MF, 475 Ohms, 1% 1/4W	R01, R02, R07, R09
04 RAD75	Resistor, SMT, 2 Ohms, 5%, 1/4 W, 1206	R04, R06, R08
04 RFFS62	Resistor,SMT,MF,100Kohms,1%, 1/10W,0603	R05
04 RX65	Thermister, PTC, SMT, 2920, 0.3-0.95 Ohm, 60V Max,	RT01, RT02
03 ZAP50	Fan, 80mm, Brushless, 48Vdc, EMI Caps, Tach w/conn	B01, B02
02 UG132	Power Supply, 18-53Vdc, 47A, 2250W/1200W, 90-265Va	U02, U04, U05, U06, U07
01 **NAX273A**	**Monitor Fan Assy, GV (with fan control)**	A02
02 219-5210	Fan Assy, ZA55 (GV Monitor)	B01
03 206-5914	Tyrap Anchor Assy	
03 JU02	MTA, Standard Dust Cover, 4 pi n	P01
03 JU27	MTA, Keyed Closed End Housing, 4 pin,22AWG	P01
02 NAPI172A	Monitor Fan Interface PWB Assy, GV (with fan contr	A01
03 CCFS07	Cap,SMT,Ceramic,0.1uF,10%,50V,X7R,0805	C04
03 CCFS52	Cap, SMT, Ceramic, 0.1uF, 10%, 25V X7R, 0603	C02, C06, C10, C12
03 CCFS60	Cap,SMT,Ceramic,1uF,10%,100V, X7R,1210	C05, C07, C08, C11, C13, C14
03 CCFS61	Cap,SMT,Ceramic,0.001uF,10%, 100V,X7R,0805	C03
03 CCFS62	Cap, SMT, Ceramic, 10uF, 10%, 25V	C09
03 CT68	Cap, SMT, Electrolytic, 68uF, 20%, 63V	C01
03 HAJ66	Terminal, SMT, Test Point, PWB	TP01
03 JPDT01	Connector,Plug,D-Sub,9-Pin, Vert., PWB	J01
03 JU25	MTA, Keyed Square Post Header Assy, 4 pin	J02
03 LCFS01	Inductor, SMT, Choke, 600ohms, 2A, 0805	L02

Component Lvl. StockCode	Description	Reference Designation
03 LCFS02	Inductor, SMT, Choke, 2000 ohm s, 80mA, 0805	L01, L03, L04
03 QDSS01	Diode, SMT, Schottky, 30V, 0.2A, SOD-323	CR01, CR02, CR03, CR04, CR05, CR06, CR07, CR08
03 QN53	Transistor,SMT,MOSFET,N-Channe l,60V,115mA,SOT-23	Q01, Q02
03 RFFS26	Resistor, SMT, MF, 100ohms, 1%, 1/10W, 0603	R09
03 RFFS38	Resistor,SMT,MF,1000ohms,1%, 1/10W,0603	R16
03 RFFS48	Resistor, SMT, MF, 6810ohms, 1%, 1/10W, 0603	R11, R13
03 RFFS50	Resistor,SMT,MF,10.0Kohms,1%, 1/10W,0603	R04, R14, R15
03 RFFS52	Resistor,SMT,MF,15.0Kohms,1%, 1/10W,0603	R07
03 RFFS55	Resistor,SMT,MF,27.4Kohms,1%, 1/10W,0603	R06
03 RFFS62	Resistor,SMT,MF,100Kohms,1%, 1/10W,0603	R02, R03
03 RFFS64	Resistor,SMT,MF,150Kohms,1%, 1/10W,0603	R05
03 RFFS70	Resistor, SMT, MF, 475Kohms, 1%, 1/10W, 0603	R01
03 RFFS74	Resistor,SMT,MF,1.00Mohms,1%, 1/10W,0603	R08, R10, R12
03 UW167	Power Supply, Dc-Dc, 36-75Vin, 12Vout, 7A, Neg On/	U01
02 SD47	Switch, Miniature, SPDT, Actua ted	S01
01 **UE301**	**Adapter, Cable, HDMI (Type A) to VGA (D-Sub), w/Au**	U50
01 **UG132**	**Power Supply, 18-53Vdc, 47A, 2250W/1200W, 90-265Va**	U03
01 **UR108**	**LCD Touch Monitor, 17" Rear Mt S.A.W**	U01

END OF ITEM

SECTION 4.3: WIRING/CONNECTOR LISTS

This section contains the wiring information for the hard-wired assemblies of the transmitter, and applicable connector mating information.

Wiring Lists Provided

Wiring lists are provided in tabular format. Table 4.3.1 on page 4.3.2 lists the tables containing wiring information. These tables provide non-printed wiring pattern, point-to-point (source and destination) interconnection information.

Wiring Lists Not Provided

Separate wiring lists are not provided for some assemblies, including:

- Assemblies that have a separate maintenance manual. Refer to the appropriate maintenance manual for detailed wiring information for these assemblies, if provided.
- Assemblies that have their wiring information shown in tables on their assembly detail drawing(s). Refer to the Mechanical Drawings section of this manual for detailed wiring information for these assemblies.

Connector Mating Information

Where applicable, a connector mating table is provided after the corresponding wiring list. Table 4.3.2 on page 4.3.2 identifies all provided connector information.

Wire Colours

Every effort is made to manufacture assemblies using the wire colour shown in the **Colour** column of the wiring list tables. Sometimes, a white wire will be substituted for the listed colour. In such cases, wires must be identified by their assigned numbers.

Printed Wiring Board Patterns

Printed wiring pattern information for printed wiring boards (PWBs) is beyond the scope of this manual, and therefore not provided.

Table 4.3.1: Wiring Lists Provided

TABLE #	Description
Table 4.3.3	Wiring List - GV5/GV3.5 Transmitter (page 4.3.3)
Table 4.3.5	Wiring List - NAC124 GV Controller (page 4.3.9)
Table 4.3.7	Wiring List - NAE107D or NAE107D/01 Exciter (page 4.3.11)
Table 4.3.9	Wiring List - Exciter Cableset Assembly (page 4.3.12)
Table 4.3.11	Wiring List - NAA61C RF Power Module (page 4.3.14)

Table 4.3.2: Connector Mating Information Provided

TABLE #	Description
Table 4.3.4	Connector Mating Information - GV5/GV3.5 Transmitter (page 4.3.6)
Table 4.3.6	Connector Mating Information - NAC124 Controller GV (page 4.3.10)
Table 4.3.8	Connector Mating Information - NAE107D or NAE107D/01 Exciter (page 4.3.12)
Table 4.3.10	Connector Mating Information - Exciter Cableset Assembly (page 4.3.13)
Table 4.3.12	Connector Mating Information - NAA61C RF Power Module (page 4.3.14)
Table 4.3.13	Connector Mating Information - NAL14 Reject Load Assy (page 4.3.15)
Table 4.3.14	Connector Mating Information - NAX264 Fan Tray Assy (page 4.3.15)

Table 4.3.3: Wiring List - GV5/GV3.5 Transmitter

Source	Destination	Wire #	Colour	Size	Remarks
TB1-1B1	A1E27	1	Grey	10	3-ph @ 208VAC
-	-	2	-	-	Not Used
TB1-1B3	A1E9	3	Grey	10	3-ph @ 208VAC
TB1-2B1	A1E28	4	Grey	10	3-ph @ 208VAC
-	-	5	-	-	Not Used
TB1-2B3	A1E12	6	Grey	10	3-ph @ 208VAC
TB1-3B1	A1E18	7	Grey	10	3-ph @ 208VAC
TB1-3B2	A1E15	8	Grey	10	3-ph @ 208VAC
TB1-1B1	A1E27	1	Grey	10	3-ph @ 380VAC
-	-	2	-	-	Not Used
TB1-2B1	A1E9	3	Grey	10	3-ph @ 380VAC
TB1-4B1	A1E28	4	Grey	10	3-ph @ 380VAC
-	-	5	-	-	Not Used
TB1-3B1	A1E12	6	Grey	10	3-ph @ 380VAC
TB1-4B4	A1E18	7	Grey	10	3-ph @ 380VAC
TB1-4B3	A1E15	8	Grey	10	3-ph @ 380VAC
TB1-1B1	A1E27	1	Grey	10	1-ph @ 240VAC
-	-	2	-	-	Not Used
TB1-1B3	A1E9	3	Grey	10	1-ph @ 240VAC
TB1-2B1	A1E28	4	Grey	10	1-ph @ 240VAC
-	-	5	-	-	Not Used
TB1-1B4	A1E12	6	Grey	10	1-ph @ 240VAC
TB1-2B4	A1E18	7	Grey	10	1-ph @ 240VAC
TB1-2B3	A1E15	8	Grey	10	1-ph @ 240VAC
A1E13	E2	9	White	10	
A1E14	E3	10	Black	10	
A1E16	E4	11	White	10	
A1E17	E5	12	Black	10	
E6	A3E5	13	White	14	
E7	A3E6	14	Black	14	
E8	P3-1	15	White	14	
E9	P3-2	16	Black	14	
E10	P4-1	17	White	14	

Table 4.3.3: Wiring List - GV5/GV3.5 Transmitter

Source	Destination	Wire #	Colour	Size	Remarks
E11	P4-2	18	Black	14	
E12	P5-1	19	White	14	
E13	P5-2	20	Black	14	
E1	E20	21	Green-Yellow	2	
E1	E20	22	Green-Yellow	2	
E14	E15	23	Green-Yellow	14	
-	-	24	-	-	Not Used
-	-	25	-	-	Not Used
-	-	26	-	-	Not Used
-	-	27	-	-	Not Used
-	-	28	-	-	Not Used
-	-	29	-	-	Not Used
-	-	30	-	-	Not Used
-	-	31	-	-	Not Used
-	-	32	-	-	Not Used
TB1-5B1	E1	-	Green-Yellow	12	Jumper
TB1-5B2	E1	-	Green-Yellow	12	Jumper
A1E23--	A3E9--	101	White	10	
A1E24--	E16--	102	Black	10	
A1E19--	A3E10--	103	White	10	
A1E20--	E16--	104	Black	10	
A1E25--	A3E7--	105	White	10	
A1E26--	E17--	106	Black	10	
A1E21--	A3E8--	107	White	10	
A1E22--	E17--	108	Black	10	
A1E7--	A3E3--	109	White	10	
A1E8--	E18--	110	Black	10	
A1E3--	A3E4--	111	White	10	
A1E4--	E18--	112	Black	10	
A1E10--	A3E1--	113	White	10	
A1E11--	E19--	114	Black	10	
A1E5--	A3E2--	115	White	10	
A1E6--	E19--	116	Black	10	
A1E27--	DS1-X1	201	Grey	14	
A1E28--	DS1-X2	202	Grey	14	

Table 4.3.3: Wiring List - GV5/GV3.5 Transmitter

Source	Destination	Wire #	Colour	Size	Remarks
A1E12--	DS3-X1	203	Grey	14	
A1E18--	DS3-X2	204	Grey	14	
A1E9--	DS2-X1	205	Grey	14	
A1E15--	DS2-X2	206	Grey	14	
P19	P20-1	430	White	20	
P19	P20-2	431	White	20	
E13	P20-6	432	Black	20	
E13	P20-7	433	Black	20	
P21	P20-8	434	Conductor	22	
P22	P20-9	434	Shield	22	
-	-	435	-	-	Not Used
P23-4	P20-4	436	Conductor	22	
P23-*	P20-5	436	Shield	22	
P24-5	P20-3	437	Conductor	22	
P24-*	P20-5	437	Shield	22	
-	-	438	-	-	Not Used
-	-	439	-	-	Not Used
E12--	XF1-Center	440	White	14	

Table 4.3.4: Connector Mating Information - GV5/GV3.5 Transmitter

Connector	Mate	Remarks
A13W1P1	A3J2	
P3	A4-DC INPUT	
P4	A5A2J1	
P5	A6A2J1	If A6 installed, else tie back
P19	XF1-B	
P20	A2A1J1	
P21	A2S1-N/C	
P22	A2S1-COM	
P23	A3J1	
P24	A3J3	
W1P1	N/A	Not Used
W1P2	N/A	Not Used
W2P1	A4 - XMTR LINK	
W2P2	A3J19	
W3P1	A3J20	
W3P2	A1J1	
W4P1	A3J15	
W4P2	A7A1J3	
W5P1	A3J8	
W5P2	A14A1J1	
W6P1	A15A1J1	
W6P2	A3J6	
W7P1	A15A2J1	
W7P2	A3J7	
W8P1	A15A3J1	
W9P1	A15A4J1	
W9P2	A5A1J1	If A5 installed, else tie back
W10P1	A15A5J1	
W10P2	A6A1J1	If A6 installed, else tie back
W12P1	A7A2J1	
W12P2	A3J14	
W13P1	A7A2J2	
W13P2	A3J13	
W14P1	A7A2J3	
W14P2	A3J12	
W15P1	A7A2J4	

Table 4.3.4: Connector Mating Information - GV5/GV3.5 Transmitter

Connector	Mate	Remarks
W15P2	A3J11	
W16P1	A12J5	
W16P2	A13J1	
W17P1	A12J6	
W17P2	A13J2	
W18P1	A12J7	
W18P2	A13J3	
W19	N/A	Not Used
W20P1	A4A1J2A	
W20P2	A16J4	
W21P1	A4A1J2B	
W21P2	A16J3	
W22	N/A	Not Used
W23P1	A4 - EXCITER LINK	
W23P2	A3J16	
W24P1	A3J17	
W24P2	A5A1J2	
W25P1	A3J18	
W25P2	A6A1J2	
W26P1	A4 - AES OUT	
W26P2	A5A1J5	
W26P3	A6A1J5	
W27P1	A5J2	
W27P2	K1-N/C	
W28P1	A6J2	
W28P2	K1-N/O	
W29P1	A4 - LAN 2	
W29P2	A16J2	
W30P1	A15A6J1	If A15A6J1 installed, else tie back
W30P2	A3J25	If A3J25 installed, else tie back
W31P1	A4 - +12V OUT	
W31P2	U1 - DC INPUT	
W32P1	A4 - COM	
W32P2	U1 - VGA	
W33P1	U50J1	
W33P2	U1 - VGA	
W34	N/A	Not Used

Table 4.3.4: Connector Mating Information - GV5/GV3.5 Transmitter

U50J1	W33P1	VGA Port
U50P1	A4 - HDMI	HDMI Plug

Table 4.3.5: Wiring List - NAC124 GV Controller

Source	Destination	Wire #	Colour	Size	Remarks
P1-1	P2-1	1	WHITE	22	
P1-2	P2-2	2	WHITE	22	
P1-3	P2-11	3	WHITE	22	
P1-4	P2-12	4	WHITE	22	
P1-5	P2-16	5	WHITE	22	
P1-6	P2-15	6	BLACK	22	
P1-7	P2-10	7	WHITE	22	
P1-8	P2-9	8	WHITE	22	
P1-9	P2-13	9	WHITE	22	
P3-1	P4-1	10	WHITE	22	
P3-2	P4-5	11	WHITE	22	
P3-3	P5-4	12	WHITE	22	+12V SBC
P3-4	P5-2	13	BLACK	22	GND
P3-12	P5-3	14	WHITE	22	
P3-6	P5-1	15	BLACK	22	
P3-5	P4-2	16	WHITE	22	
P3-7	P4-7	17	WHITE	22	
P3-8	P4-8	18	BLACK	22	
P3-9	P4-9	19	WHITE	22	
P3-10	P4-10	20	WHITE	22	
P3-11	P4-11	21	WHITE	22	
-	-	22	NOT USED	-	
P3-14	P4-14	23	WHITE	22	
P3-15	P4-15	24	BLACK	22	
P6-6	P7-2	25	WHITE	26	SBC Reset +
P6-8	P7-1	26	BLACK	26	SBC Reset -
P8-1	P9-4	-	BLACK	24	2-Conductor
P8-6	P9-3	-	RED	24	2-Conductor
P8-8	-	27	SHIELD	24	Shield
P11-2	P10-2	28	WHITE	26	RS232 TXD
P11-3	P10-3	29	RED	26	RS232 RXD
P11-5	P10-5	30	BLACK	26	RS232 GND
W4P3-1	W4P2-1	31	WHITE	22	SBC to NAPC163
W4P3-3	W4P2-3	32	WHITE	22	SBC to NAPC163
W4P3-5	W4P2-5	33	WHITE	22	SBC to NAPC163
W4P3-7	W4P2-7	34	BLACK	22	SBC to NAPC163

Table 4.3.5: Wiring List - NAC124 GV Controller

Source	Destination	Wire #	Colour	Size	Remarks
W4P1-4	W4P2-2	-	BLACK	22	USB Panel to SBC
W4P1-3	W4P2-4	-	GREEN	28	USB Panel to SBC
W4P1-2	W4P2-6	-	WHITE	28	USB Panel to SBC
W4P1-1	W4P2-8	-	BLACK	22	USB Panel to SBC

Table 4.3.6: Connector Mating Information - NAC124 GV Controller

Connector	Mate	Remarks
P1	A4J2	UI Interface to Display
P2	U1H1	UI Interface to Display
P3	A3J4	Power Supply Distribution
P4	A2J1	Power Supply Distribution
P5	A1U1_PWR2	SBC Power
P6	A2J13	SBC Reset
P7	A1U1_RST_BTN1	SBC Reset
P8	A2J4	SBC Streaming Bus
P9	A1U1_COM3	SBC Streaming Bus
P10	A1U1_COM2	SBC Serial Bus
P11	A2J3	SBC Serial Bus
COM1	-	Monitor COM Port (no mate)
W3P1	A2J2	Controller to UI Interface
W3P2	A4J1	Controller to UI Interface
W4P1	USB	USB (Front Panel Mount)
W4P2	A1U1_USB3_1	SBC USB 3 1 (Red Wire Pin 8)
W4P2	A1U1_USB3_0	SBC USB 3 0
W4P3	A2J14	USB
W7P1	U2J1	SSD SATA+ Power
W7P2	A1U1_SATA1	SBC to SSD SATA
W7P3	A1U1_SATA_PWR1	SBC to SSD Power
B1P1	A3J3	Module Fan

Table 4.3.7: Wiring List - NAE107D or NAE107D/01 Exciter

Source	Destination	Wire #	Colour	Size	Remarks
P1-1	P2-1	1	White	22	
P1-5	P2-5	2	Black	22	
P1-11	P2-11	3	White	22	
P1-13	P2-24	4	Black	22	
P1-18	P2-4	5	White	22	
P1-17	P2-17	6	White	22	
P1-19	P2-15	7	White	22	
P1-22	P2-12	8	Black	22	
P1-23	P2-23	9	White	22	
P1-24	P2-13	10	White	22	
P1-25	P2-25	11	White	22	
P2-7	P4-4	12	White	22	
P2-16	P4-2	13	White	22	
P2-20	P4-3	14	White	22	
P1-9	P3-6	15	White	22	
P1-10	P3-5	16	Black	22	
P2-3	P3-1	17	White	22	
J1-Conductor	A5-M-	J1	Core		50 Ohm Coaxial
J1-Shield	A5-L-	J1	Shield		50 Ohm Coaxial
J3-Conductor	A3-A-	J3	Core		50 Ohm Coaxial
J3-Shield	A3-G-	J3	Shield		50 Ohm Coaxial
C1E1--	A2-A-	LINK		20	
A5-C-	C1E2--	LINK		20	
C2E1--	A2-B-	LINK		20	
A5-B-	C2E2--	LINK		20	
C3E1--	A2-C-	LINK		20	
A5-A-	C3E2--	LINK		20	
C4E1--	A2-D-	LINK	White	16	
A4-B-	C4E2--	LINK	White	16	
C5E1--	A2-E-	LINK		24	
A4-V-	C5E2--	LINK		24	
C6E1--	A2-F-	LINK		24	
A3-C-	C6E2--	LINK		24	
C7E1--	A2-G-	LINK		24	
C8E1--	A2-H-	LINK		24	
C9E1--	A2-J-	LINK		24	

Table 4.3.7: Wiring List - NAE107D or NAE107D/01 Exciter

Source	Destination	Wire #	Colour	Size	Remarks
A3-B-	C9E2--	LINK		24	
A3-D-	A4-X-	LINK		20	
A4-D-	A5-D-			20	
A5-F-	J2-Conductor	Link		20	
C8E2--	RT1-A		Black	22	Thermistor Lead
C7E2--	RT1-B		Black	22	Thermistor Lead

Table 4.3.8: Connector Mating Information - NAE107D or NAE107D/01 Exciter

Connector	Mate	Remarks
B1P1	A2J4	
P1	A2J3	
P2	A1J9	
P3	A8J5	
P4	A6J1	
W1P1	A1J15	
W1P2	J3	
W2P1	A1J13	
W2P1	A8J3	Used with Exgine systems only
W3P1	A1J14	Used with Exgine systems only
W3P2	A8J2	Used with Exgine systems only
W4P1	A8J1	Used with Exgine systems only
W4P2	U1J1	Used with Exgine systems only
W5P1	A1J11	Used with Exgine systems only
W5P2	A8J8	Used with Exgine systems only
W6P1	A1J13	Used with Exgine systems only
W6P2	A8J4	Used with Exgine systems only

Table 4.3.9: Wiring List - GV Exciter Cableset Assembly

Source	Destination	Wire #	Colour	Size	Remarks
W26P1-1	W26P2-1	1A	Red	24	
W26P1-2	W26P2-2	1B	Black	24	
W26P1-6	W26P2-9	1	Shield	24	
W26P1-4	W26P3-1	2A	Red	24	
W26P1-5	W26P3-2	2B	Black	24	
W26P1-9	W26P3-9	2	Shield	24	

Table 4.3.10: Connector Mating Information - GV Exciter Cableset Assembly

Connector	Mate	Remarks
W23P1	A4 - EXCITER LINK	
W23P2	A3J16	
W24P1	A3J17	
W24P2	A5A1J2	
W25P1	A3J18	
W25P2	A6A1J2	If A6 installed, else tie back
W26P1	A4 - AES OUT	
W26P2	A5A1J5	
W26P3	A6A1J5	If A6 installed, else tie back
W27P1	A5J2	
W27P2	A7A1J1	
W28P1	A6J2	If A6 installed, else tie back
W28P2	A7A1J2	

Table 4.3.11: Wiring List - NAA61C RF Power Module

Source	Destination	Wire #	Colour	Size	Remarks
A5TB1-1	A1-U	1	White	12	
A5TB1-3	A2-U	2	White	12	
A5TB1-2	A3-U	3	White	12	
A5TB1-4	A4-U	4	White	12	
A5-A	A1-V	-	-	24	Link
A5-D	A2-V	-	-	24	Link
A5-G	A3-V	-	-	24	Link
A5-K	A4-V	-	-	24	Link
A5-C	A1-X	-	-	24	Link
A5-F	A2-X	-	-	24	Link
A5-J	A3-X	-	-	24	Link
A5-M	A4-X	-	-	24	Link
A1-D	A6-F	-	-	16	Link
A2-D	A6-G	-	-	16	Link
A3-D	A7-D	-	-	16	Link
A4-D	A7-E	-	-	16	Link
A7-C	J1-Center	-	-	10	Link
A5-P	A6-C	5	Core	-	50 Ohm Coax
A5-N	A6-E	5	Shield	-	50 Ohm Coax

Table 4.3.12: Connector Mating Information - NAA61C RF Power Module

Connector	Mate	Remarks
B1P1	A5J1	Fan 1 Connection
B2P1	A5J2	Fan 2 Connection
B3P1	A5J3	Fan 3 Connection
B4P1	A5J4	Fan 4 Connection
B5P1	A5J5	Fan 5 Connection
B6P1	A5J6	Fan 6 Connection

Table 4.3.13: Connector Mating Information - NAL14 Reject Load Assy

Connector	Mate	Remarks
W1P1	W1P1	
W1P2	A1J1	

Table 4.3.14: Connector Mating Information - NAX264 Fan Tray Assy

Connector	Mate	Remarks
B1P1	A1J2	
B2P1	A1J3	

SECTION 4.4: READING ELECTRICAL SCHEMATICS

This section contains electrical schematics and logic diagrams for the transmitter. Block diagrams, simplified electrical schematics, and logic diagrams may be included. Refer to Table 4.4.1 on page 4.4.5 for an itemized listing.

Component Values

Unless otherwise specified on the logic or schematic diagram, the following defaults apply:

-

Capacitor values are shown in microfarads (uF) (e.g. 5 uF)
-

Resistor values are shown in ohms (e.g. 10 ohms; K = 1,000 and M = 1,000,000)
Resistor power ratings are not shown when less than 0.5 W
-
Unidentified diodes are part number BAS21HT1 (Nautel Part # QDRS01)
-

Unidentified transient suppressors are part number 0603E SDA-TR1 (Nautel Part # QR70)

Graphic and Logic Symbols

The graphic symbols used on electrical schematics are in accordance with American National Standard ANSI Y32.2-1975 - Graphic Symbols for Electrical and Electronic Diagrams.

The logic symbols used on electrical schematics and logic diagrams are in accordance with American National Standard ANSI Y32.14-1975 - Graphic Symbols for Logic Diagrams.

Reference Designations

Referenced designations were assigned in accordance with American Society of Mechanical Engineers ASME Y14.44-2008 - Reference Designations for Electrical and Electronic Parts and Equipment.

Each electrical symbol is identified with its basic reference designation. To obtain the full reference designation for a specific part, prefix this basic identifier with the reference designation assigned to all higher assemblies. For example, the complete designation for a resistor (R_1) on a printed wiring board (A_1), that is part of a larger board (A_2), would be $A_2A_1R_1$.

Unique Symbols

Nautel uses unique symbols on electrical schematics to describe logic (two-state) signals. These signals differ from single-state signals or analog signals that may have multiple values.

Type of Inputs and Outputs

On electrical schematics, names used to describe logic (two-state) input and output signals are prefixed with a # symbol.

Logic Level Convention

The # prefix identifies an input or output signal that has two distinct states: high and low.

The suffix on an input or output signal name identifies the active (true) state of the signal. The high suffix (+) indicates the more positive of the two levels used to represent the logic states. The low suffix (-) indicates the less positive of the two levels.

Two types of logic, positive and negative, may be represented on a particular schematic. In positive logic, high represents the active (true) state, and low represents the inactive (false) state. In negative logic, low represents the active (true) state, and high represents the inactive (false) state.

Identifying Schematic Diagrams

Each electrical schematic in this section is identified by a number that is both the figure number and the page number. The numbers are assigned sequentially are prefixed by the letters SD. The electrical schematics and logic diagrams included in this section are listed in Table 4.4.1 on page 4.4.5.

Structure of Schematics

The electrical schematics are structured in a hierarchical format that is based on function and signal flow. Wherever practical, the signal flow is from left to right. Normally, inputs originate on the left-hand side and outputs extend to the right-hand side. Exceptions are shown by an arrow indicating the direction of signal flow.

NOTE: The physical location of a part or assembly was not necessarily a factor during creation of the schematic. The full reference designation assigned to a part or assembly, in conjunction with the family tree (see Section 4.2, "Parts Lists" on page 4.2.1) and the assembly detail drawings (see Section 4.5, "Mechanical Drawings" on page 4.5.1), will identify its location.

Figures SD-1 through SD-4 identify each major stage and its detailed interconnection. Each stage contains cross-references that identify which blocks are the signal sources for inputs, or the destinations for outputs.

When a sub-function is treated as a block in figures SD-1 through SD-4, its detailed circuit information is included in its own schematic drawing(s), which is also included in this section.

Locating Schematic Diagram(s) for a Functional Block

The text inside a functional block provides the key to locating its schematic diagram(s).

1. When a functional block is assigned a reference designation (e.g., A8A1), refer to the family trees in Section 4.2, "Parts Lists" on page 4.2.1. Follow the family tree branches to the block that contains the desired reference designation, and associated Nautel nomenclature (e.g., NAPA31C Power Amplifier PWB). Note the reference designations and Nautel nomenclatures of all higher assemblies in the path.
   Example: A8 NAA61C RF Module Assy 1 -> A8A1 NAPA31C Power Amplifier PWB.

2. Refer to Table 4.4.1 on page 4.4.5 and use the reference designation and Nautel nomenclature to identify the appropriate schematic diagram(s).
   Example: NAPA31C Power Amplifier PWB is shown on schematic SD-30.

3. If necessary, refer to the referenced figure in the schematics at the end of this section and locate the next, lower-level assembly. Then, repeat this procedure until the desired schematic diagram is found.

Locating a Part or Assembly on a Schematic

The full reference designation assigned to a part or assembly is the key to physically locating that part or assembly.

NOTE: Full reference designations contain the assembly hierarchical coding. When the end item is divided into units (cabinets), the first coding is a unit number (1, 2, 3, etc.). When the end item is divided into assemblies, the first coding is an assembly number (A1, A2, A3, etc.). If a unit or an assembly is divided into sub-assemblies, assembly coding that identifies assembly relationship (1A1, A2A1, A2A1A1, etc.) is added.

1. Refer to the family trees in Section 4.2, "Parts Lists" on page 4.2.1.

2. Follow the family tree branches to the block that contains the desired reference designation, while noting the Nautel nomenclatures and names of all higher assemblies in the path. Example: A8 NAA61C RF Module Assy 1 -> A8A1 NAPA31C Power Amplifier PWB.

NOTE: The drawings in the Mechanical Drawings section depict the assembly detail of the transmitter and its modules and assemblies

3. Refer to Table 4.5.1 in Section 4.5, "Mechanical Drawings" on page 4.5.1. Use the Nautel nomenclature and name of each family tree block in the path, starting at the highest assembly – this is normally Figure MD-1 – to determine the figure number(s) for that assembly. Example: NAPA31C Power Amplifier PWB is shown on MD-13.

4. Refer to the referenced figure (e.g., MD-13) in Section 4.5, "Mechanical Drawings" on page 4.5.1 to locate the desired part or assembly.

Table 4.4.1: List of Electrical Schematics

Figure #	Title
SD-1	GV5/GV3.5 Transmitter - Ac-Dc Power Stage
SD-2	GV5/GV3.5 Transmitter - Control/Monitor Stage
SD-3	GV5/GV3.5 Transmitter - RF Drive Stage
SD-4	GV5/GV3.5 Transmitter - RF Power Stage
SD-5	NAPI150A/01 Power Supply Interface PWB (Sheet 1 of 3)
SD-6	NAPI150A/01 Power Supply Interface PWB (Sheet 2 of 3)
SD-7	NAPI150A/01 Power Supply Interface PWB (Sheet 3 of 3)
SD-8	NAPI172A Monitor Fan Interface PWB
SD-9	NAPC158B Module Control/Interface PWB (Sheet 1 of 8)
SD-10	NAPC158B Module Control/Interface PWB (Sheet 2 of 8)
SD-11	NAPC158B Module Control/Interface PWB (Sheet 3 of 8)
SD-12	NAPC158B Module Control/Interface PWB (Sheet 4 of 8)
SD-13	NAPC158B Module Control/Interface PWB (Sheet 5 of 8)
SD-14	NAPC158B Module Control/Interface PWB (Sheet 6 of 8)
SD-15	NAPC158B Module Control/Interface PWB (Sheet 7 of 8)
SD-16	NAPC158B Module Control/Interface PWB (Sheet 8 of 8)
SD-17	NAC124 Controller
SD-18	NAPC163 Controller PWB (Sheet 1 of 6)
SD-19	NAPC163 Controller PWB (Sheet 2 of 6)
SD-20	NAPC163 Controller PWB (Sheet 3 of 6)
SD-21	NAPC163 Controller PWB (Sheet 4 of 6)
SD-22	NAPC163 Controller PWB (Sheet 5 of 6)
SD-23	NAPC163 Controller PWB (Sheet 6 of 6)
SD-24	NAPS49B Power Supply Distribution PWB
SD-25	NAPI142A/01 UI Interface PWB
SD-26	NAE107D or NAE107DB/01 Exciter
SD-27	NAPS47E/01 Power Supply Distribution PWB (Sheet 1 of 2)
SD-28	NAPS47E/01 Power Supply Distribution PWB (Sheet 2 of 2)
SD-29	NAPA35 Pre-Amplifier PWB
SD-30	NAPA31C Power Amplifier PWB
SD-31	NAPP06/01 Output Power Probe PWB
SD-32	LED PWB (206-3060)
SD-33	NAI22A/01 RF Drive Splitter/Changeover Assembly
SD-34	NAA61C RF Power Module

Table 4.4.1: List of Electrical Schematics

Figure #	Title
SD-35	NAX264 2-Way Fan Tray Assembly
SD-36	NAFP109B Output Power Probe and Sample PWBs
SD-37	NAPI143/01 Remote Interface PWB
SD-38	UPS Interface Assembly (Optional)
SD-39	NAL14 Reject Load Assembly
SD-40	NAF119A/03 Combiner/Filter Assembly

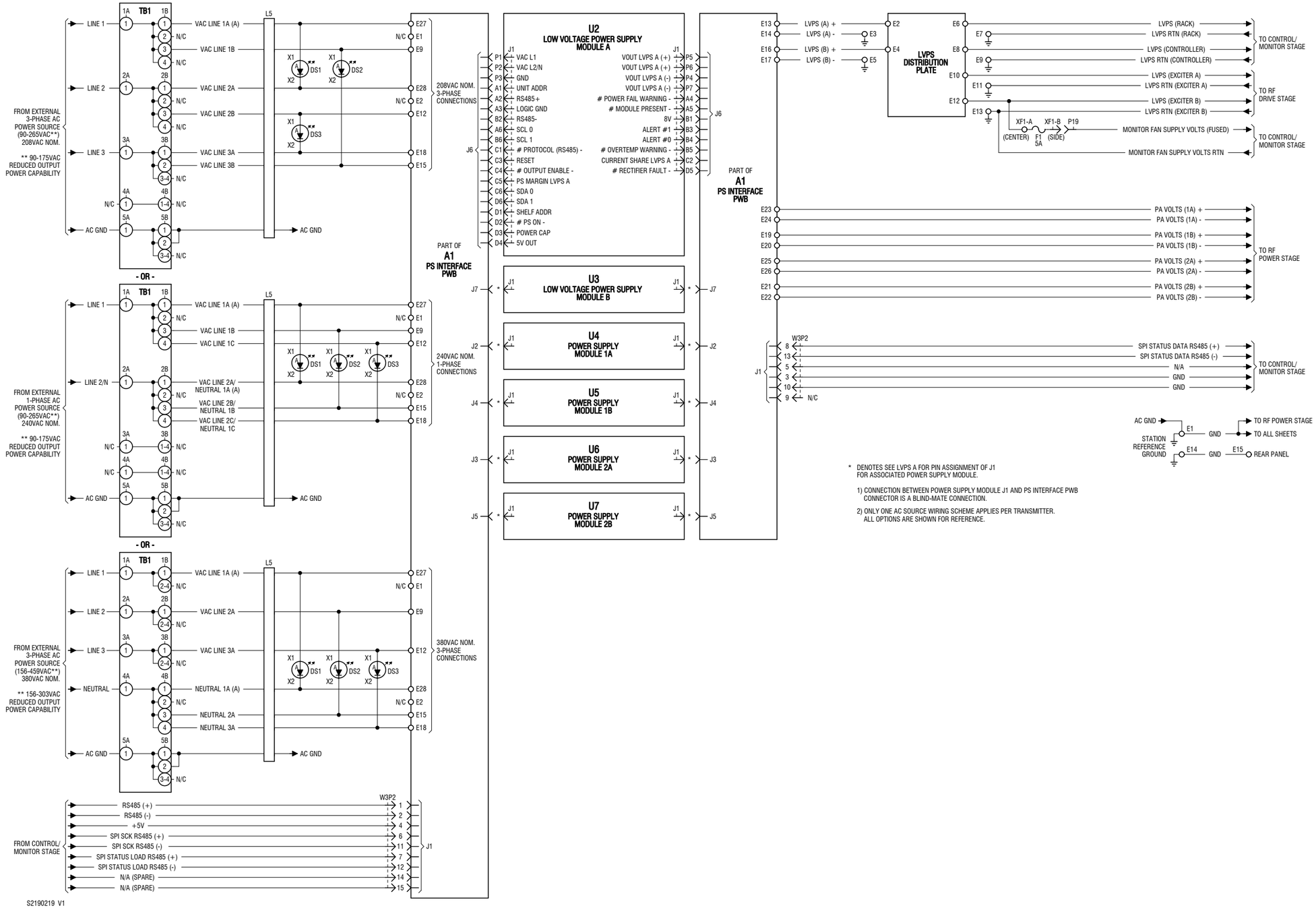

Figure SD-1: GV5/GV3.5 Transmitter - Ac-Dc Power Stage

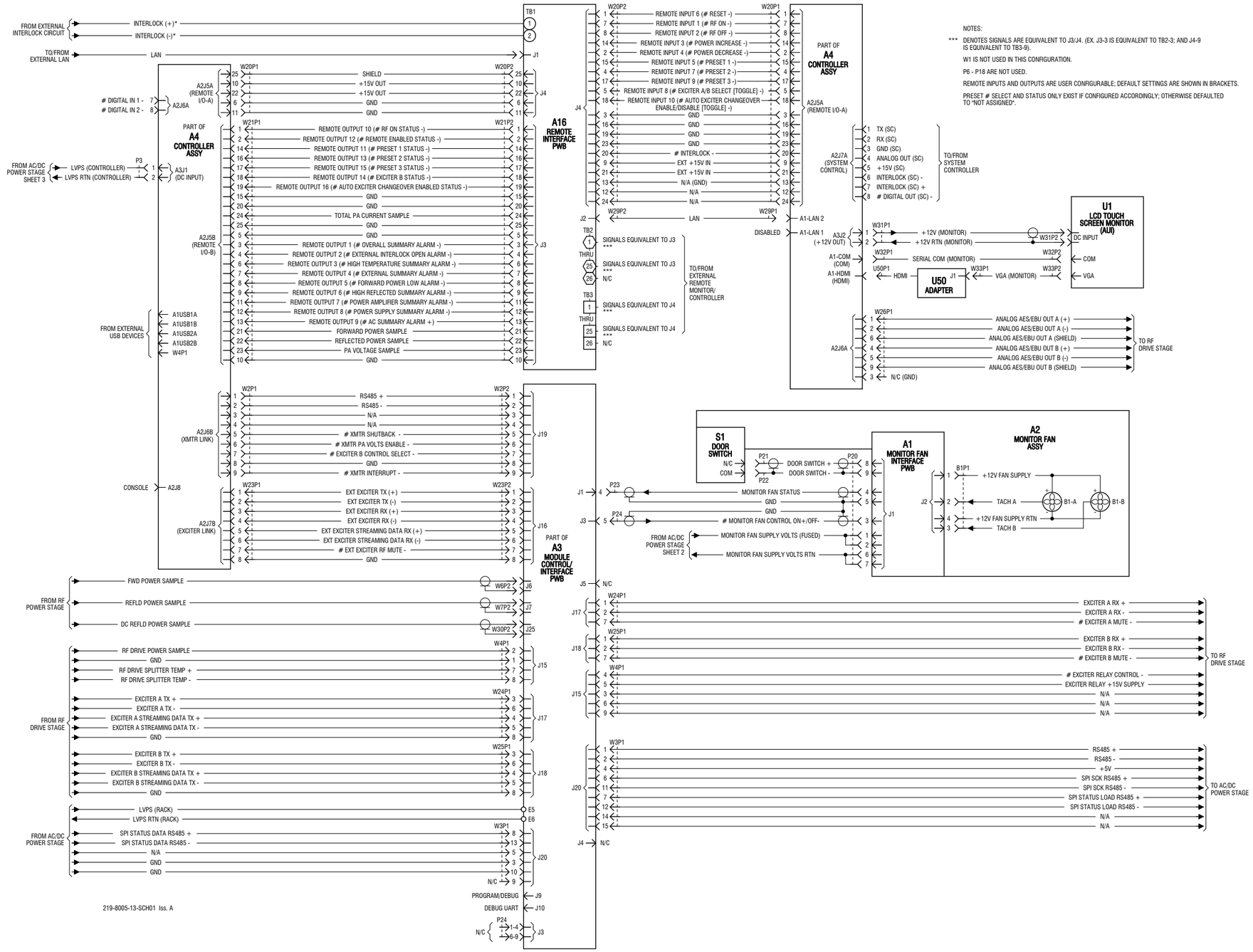

Figure SD-2: GV5/GV3.5 Transmitter - Control/Monitor Stage

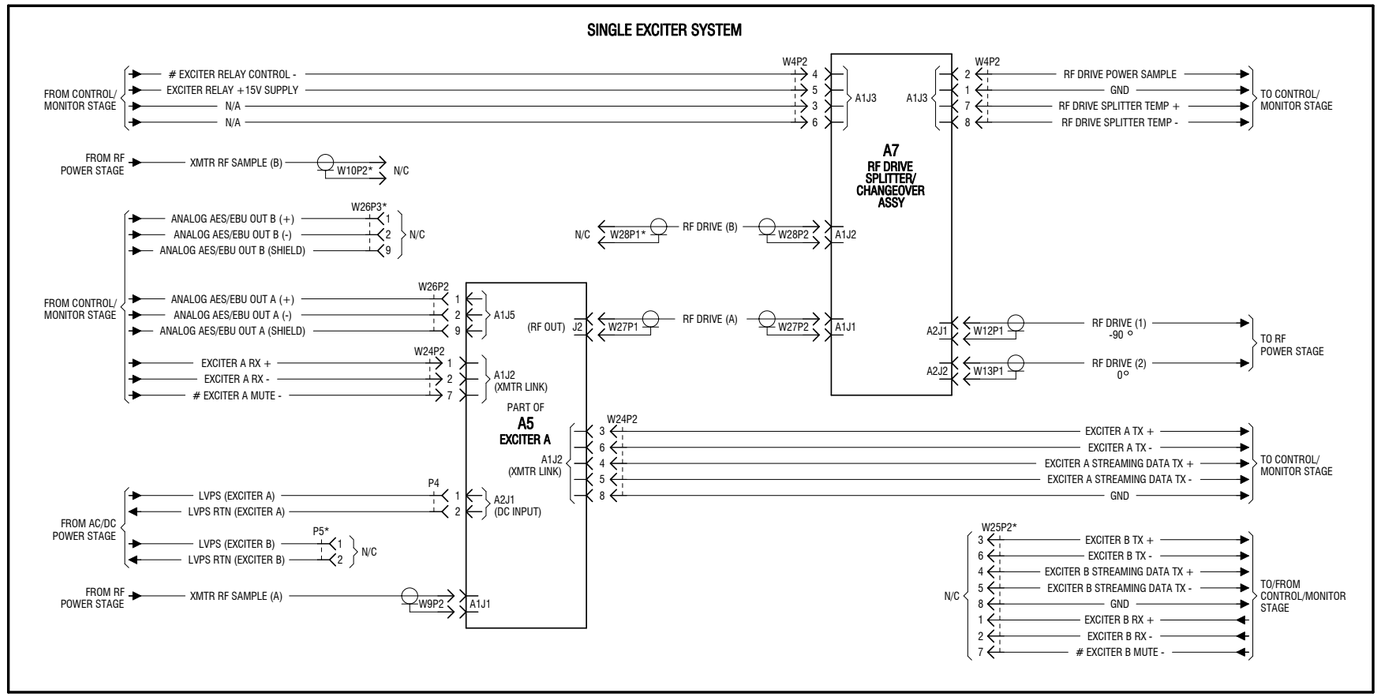

NOTES:

EXCITER INPUTS/OUTPUTS ARE LIMITED TO TRANSMITTER SPECIFIC CONNECTIONS. SEE EXCITER SECTION OF MANUAL FOR MORE DETAILS ON CUSTOMER CONNECTIONS.

W11 IS NOT USED IN THIS CONFIGURATION AND IS THEREFORE NOT SHOWN.

* DENOTES W28P1, P5, W10P2, W25P2 & W26P3 ARE NOT USED IN SINGLE EXCITER CONFIGURED SYSTEMS AND ARE TIED BACK.

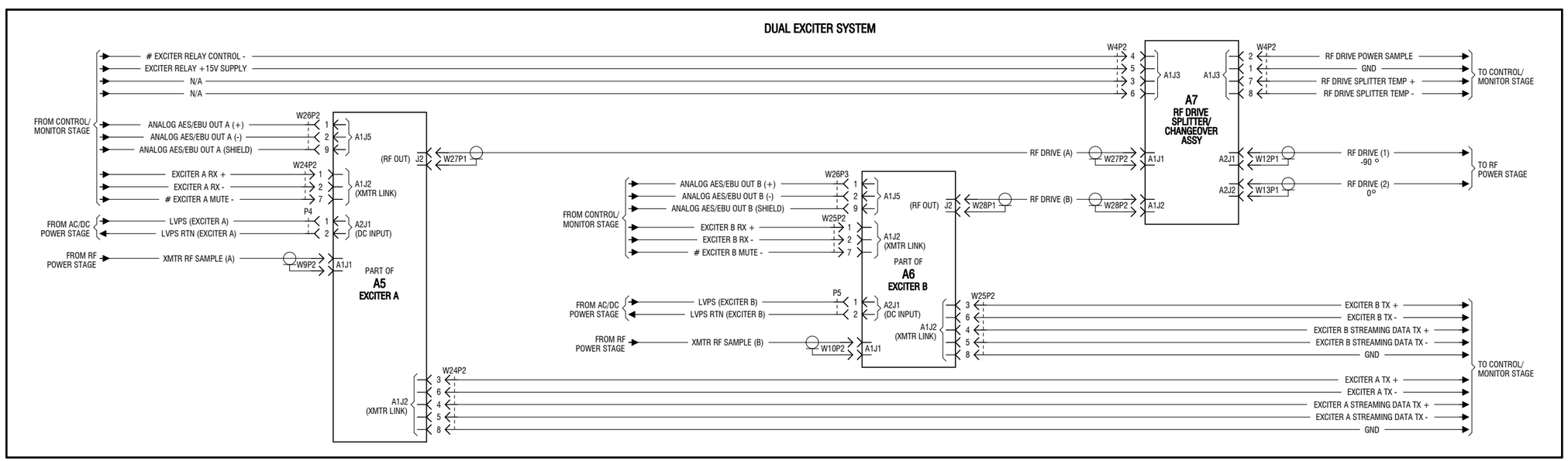

S2190221 V1

Figure SD-3: GV5/GV3.5 Transmitter - RF Drive Stage

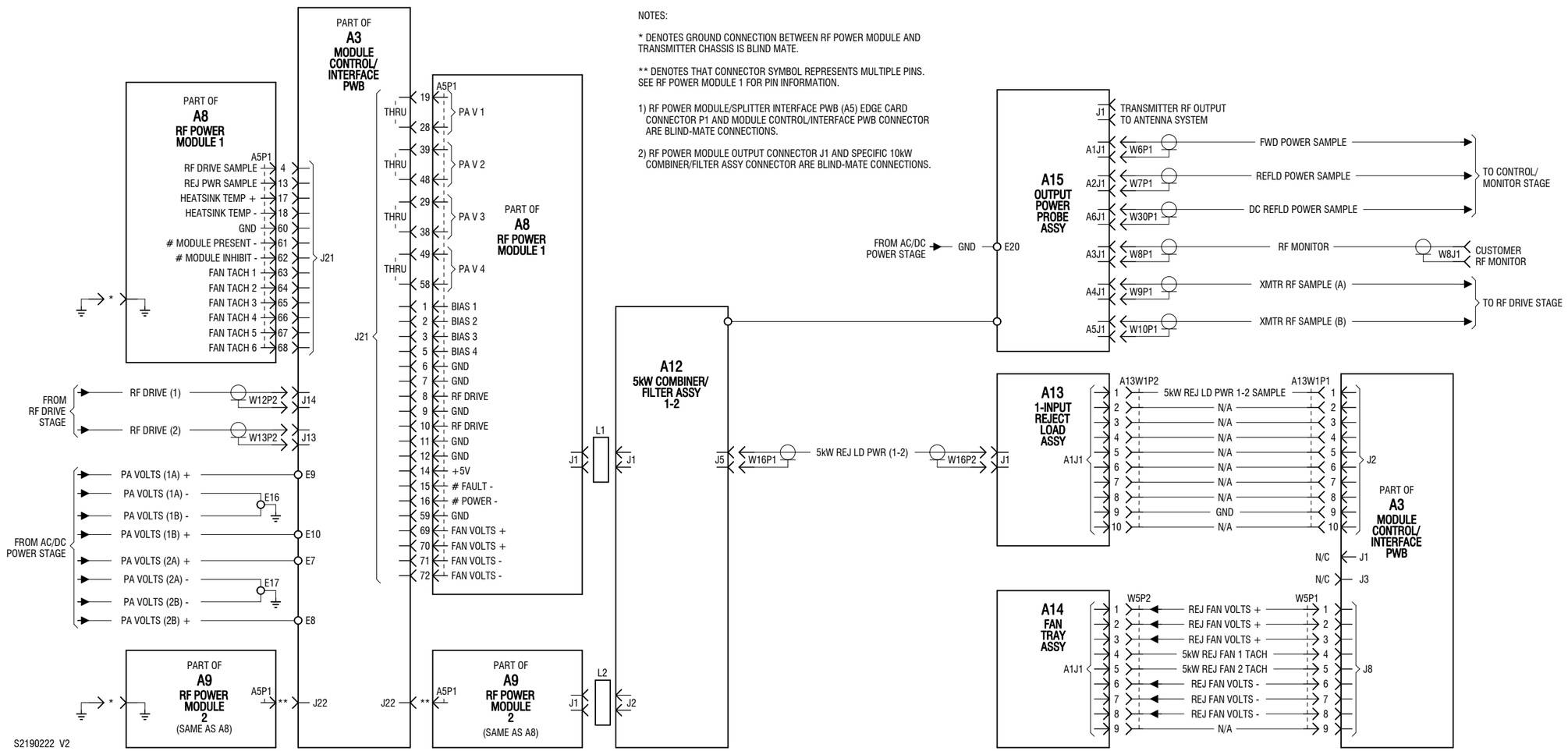

Figure SD-4: GV5/GV3.5 Transmitter - RF Power Stage

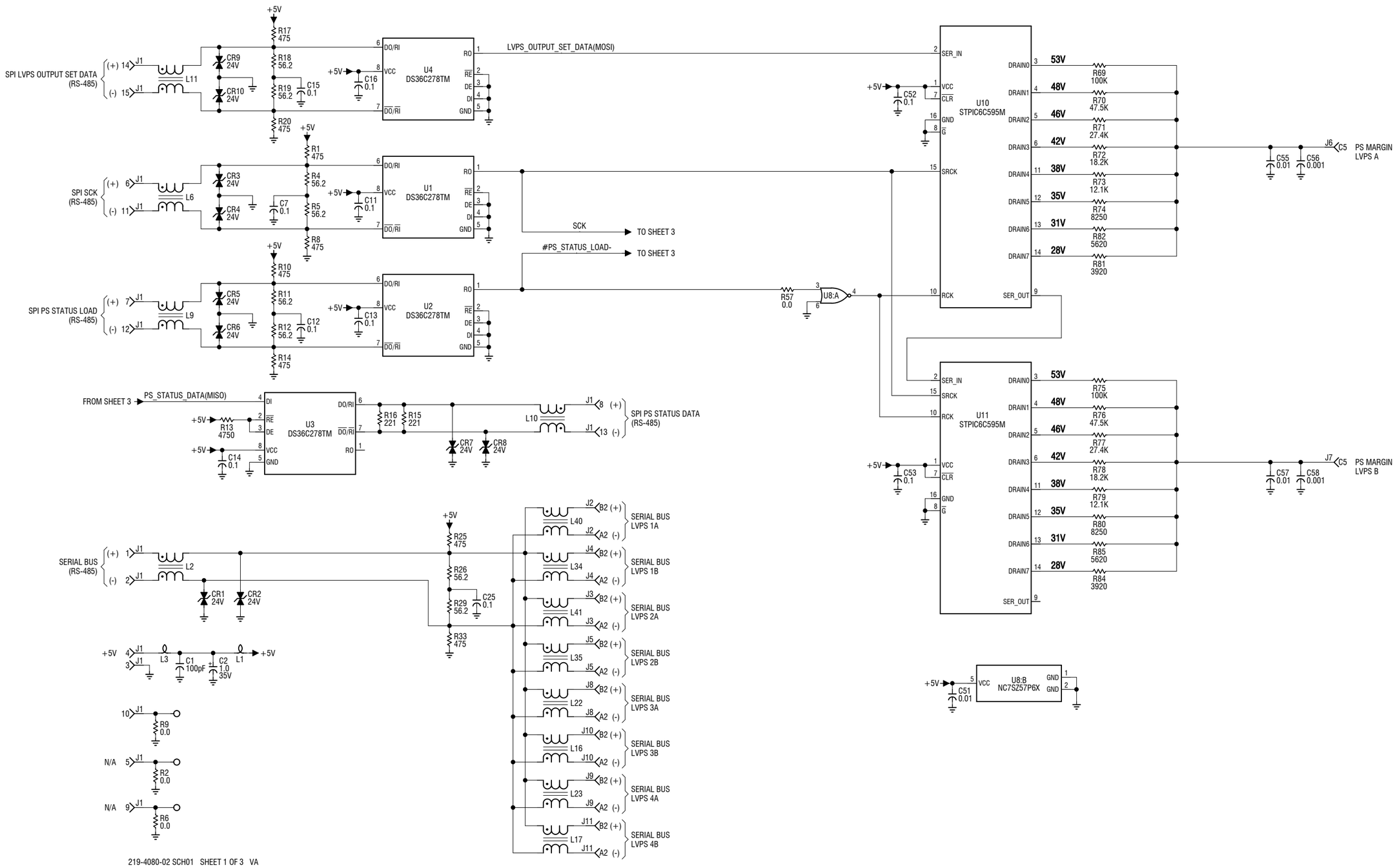

Figure SD-5: NAPI150A/01 Power Supply Interface PWB (Sheet 1 of 3)

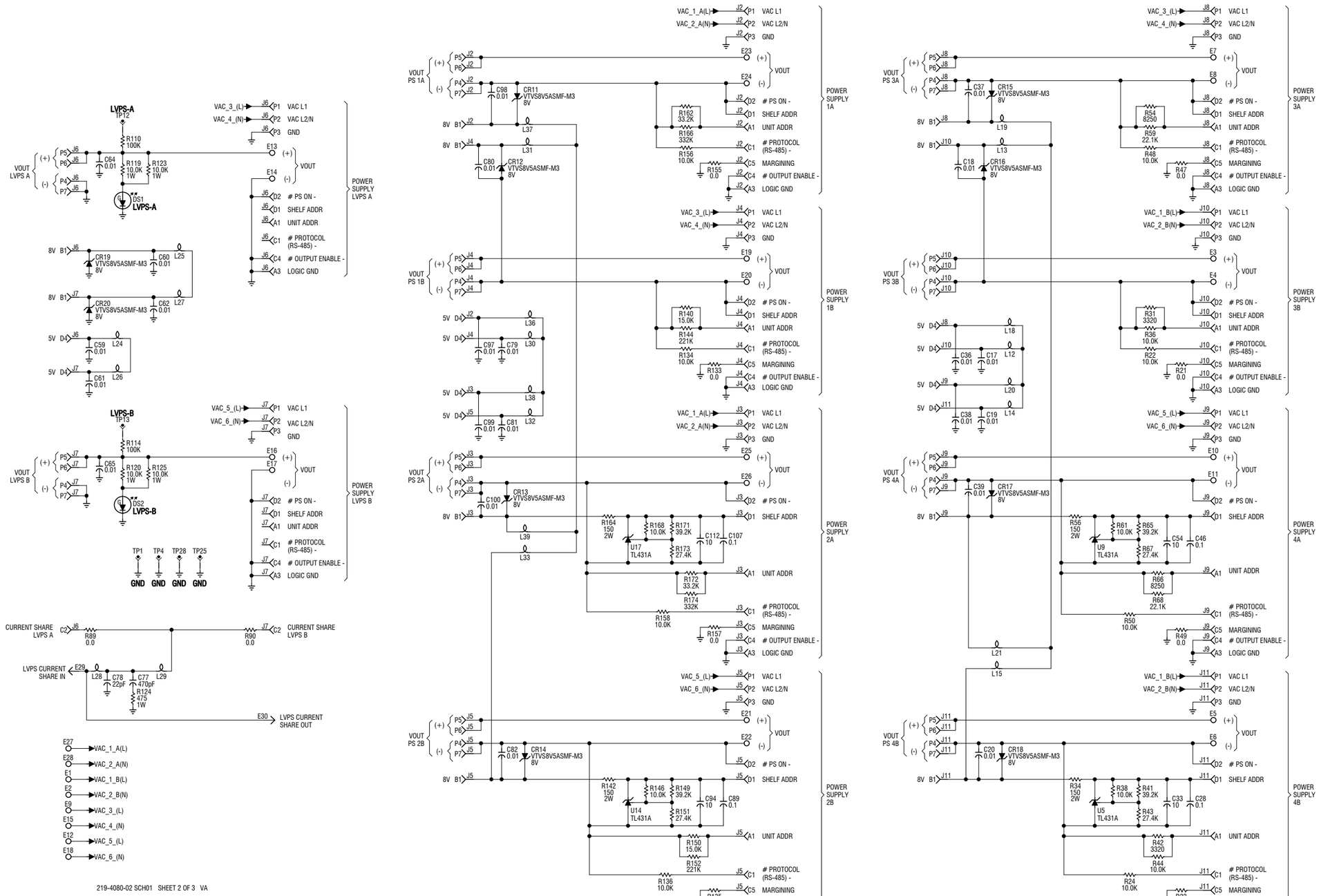

Figure SD-6: NAPI150A/01 Power Supply Interface PWB (Sheet 2 of 3)

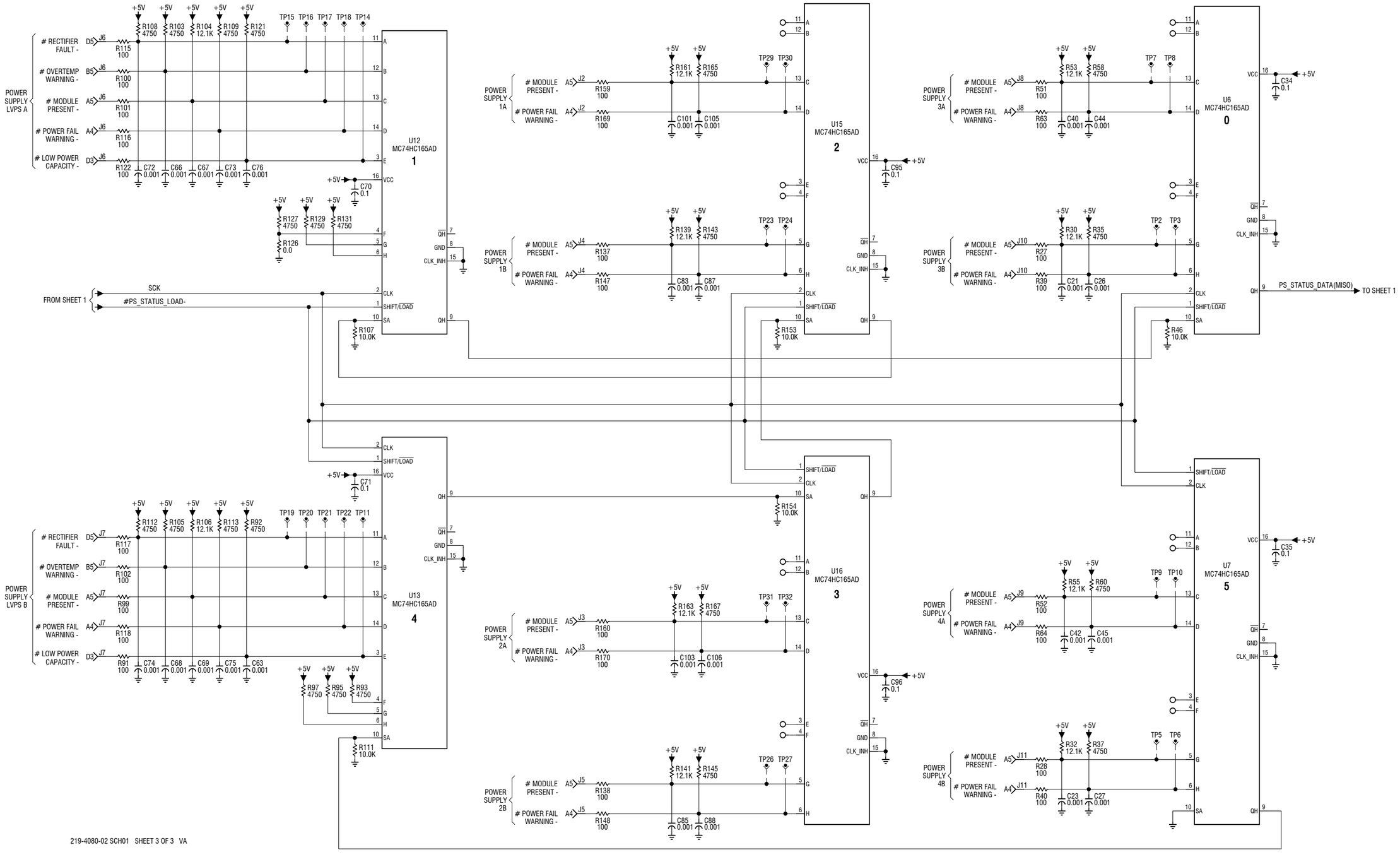

Figure SD-7: NAPI150A/01 Power Supply Interface PWB (Sheet 3 of 3)

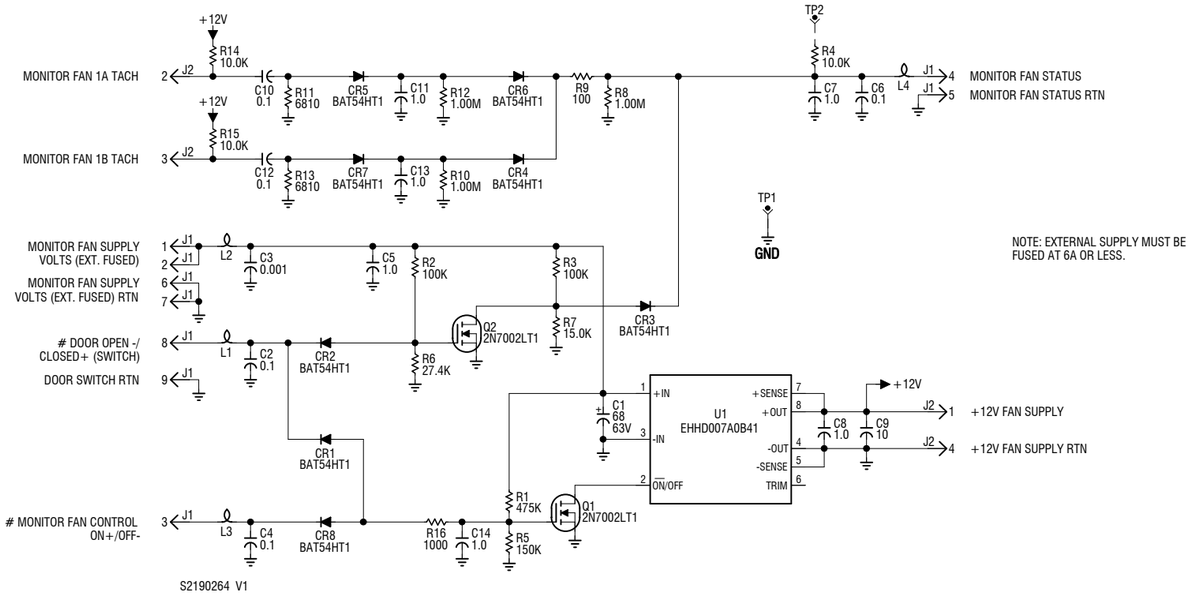

Figure SD-8: NAPI172A Monitor Fan Interface PWB

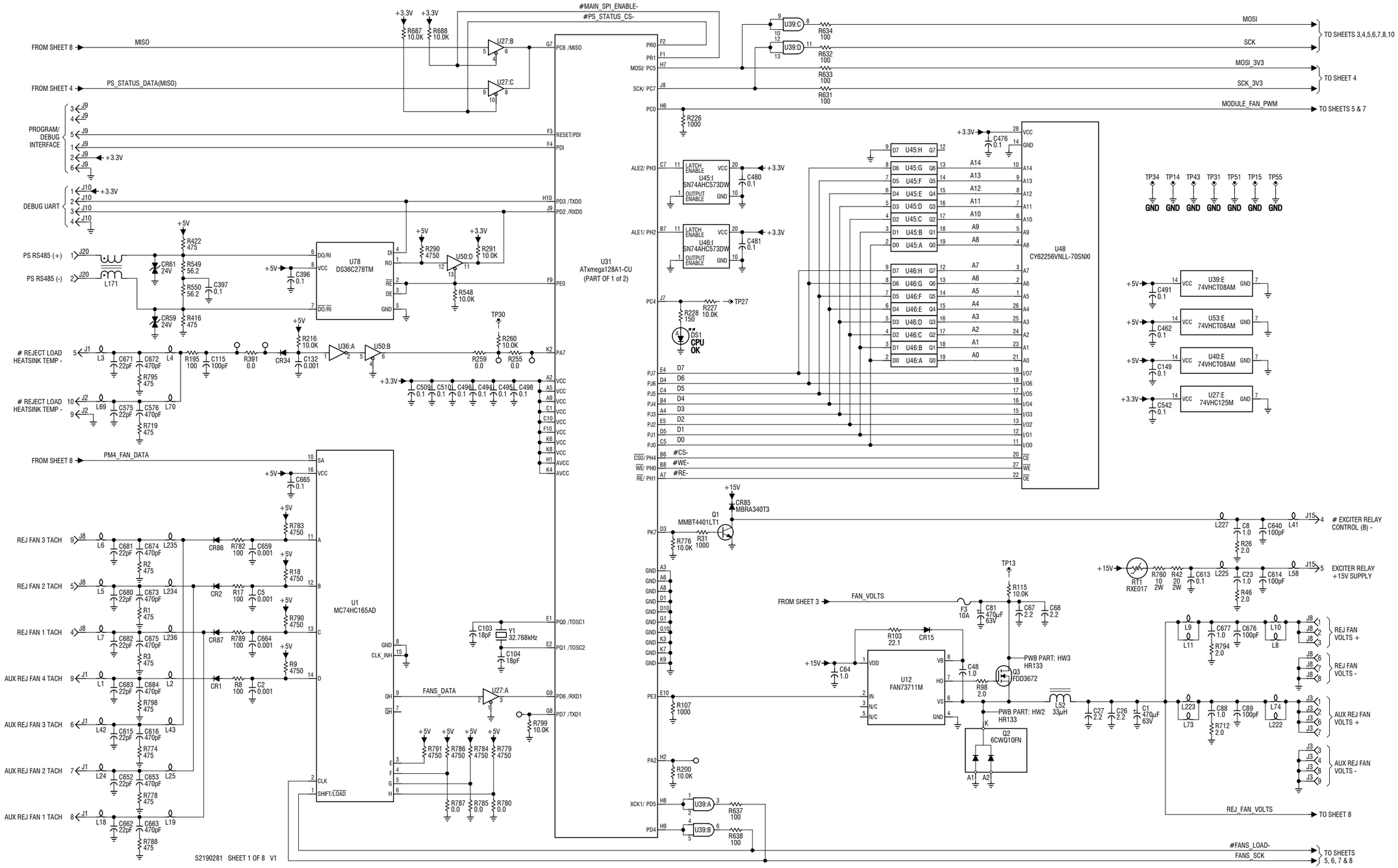

Figure SD-9: NAPC158B Module Control/Interface PWB (Sheet 1 of 8)

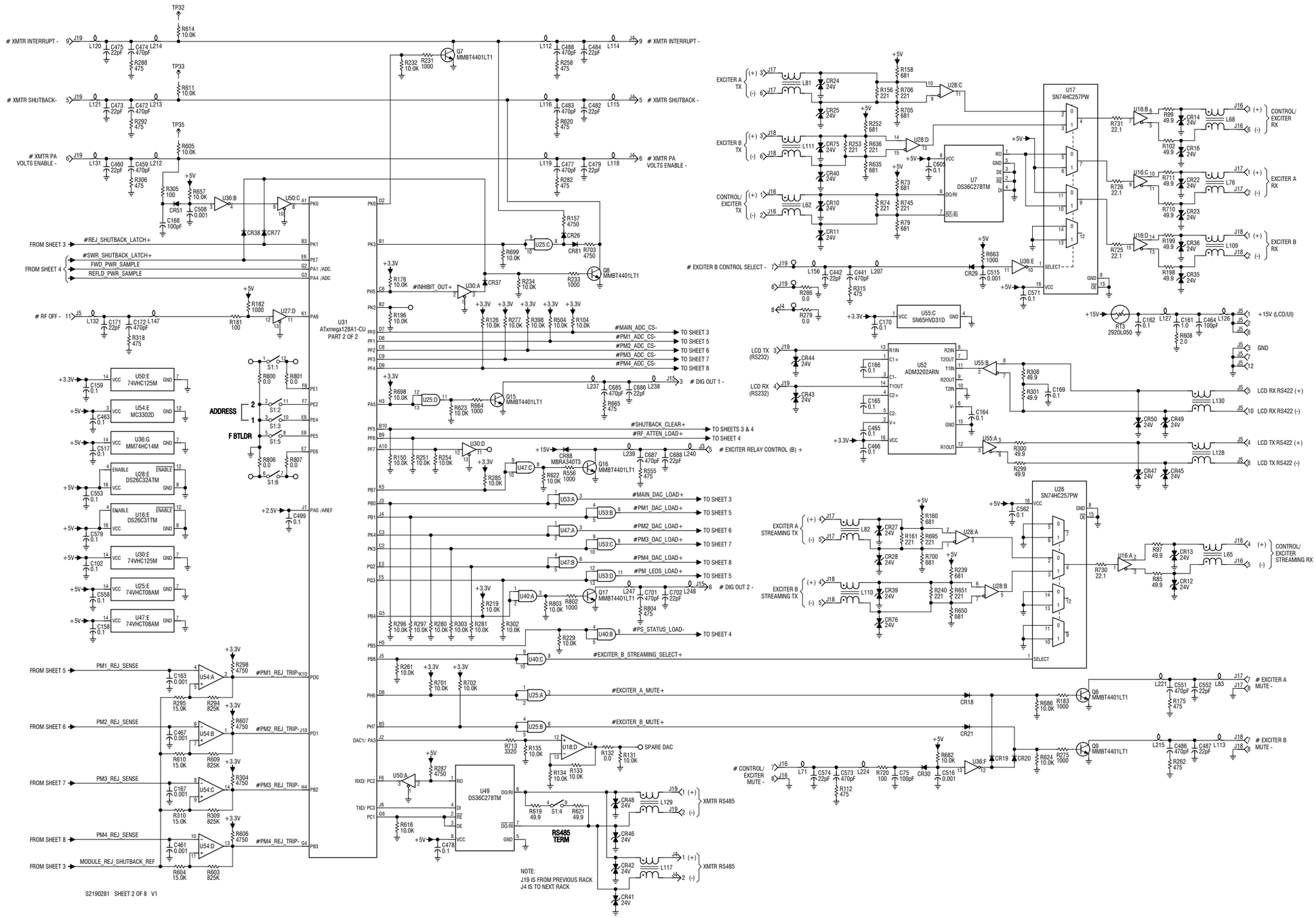

Figure SD-10: NAPC158B Module Control/Interface PWB (Sheet 2 of 8)

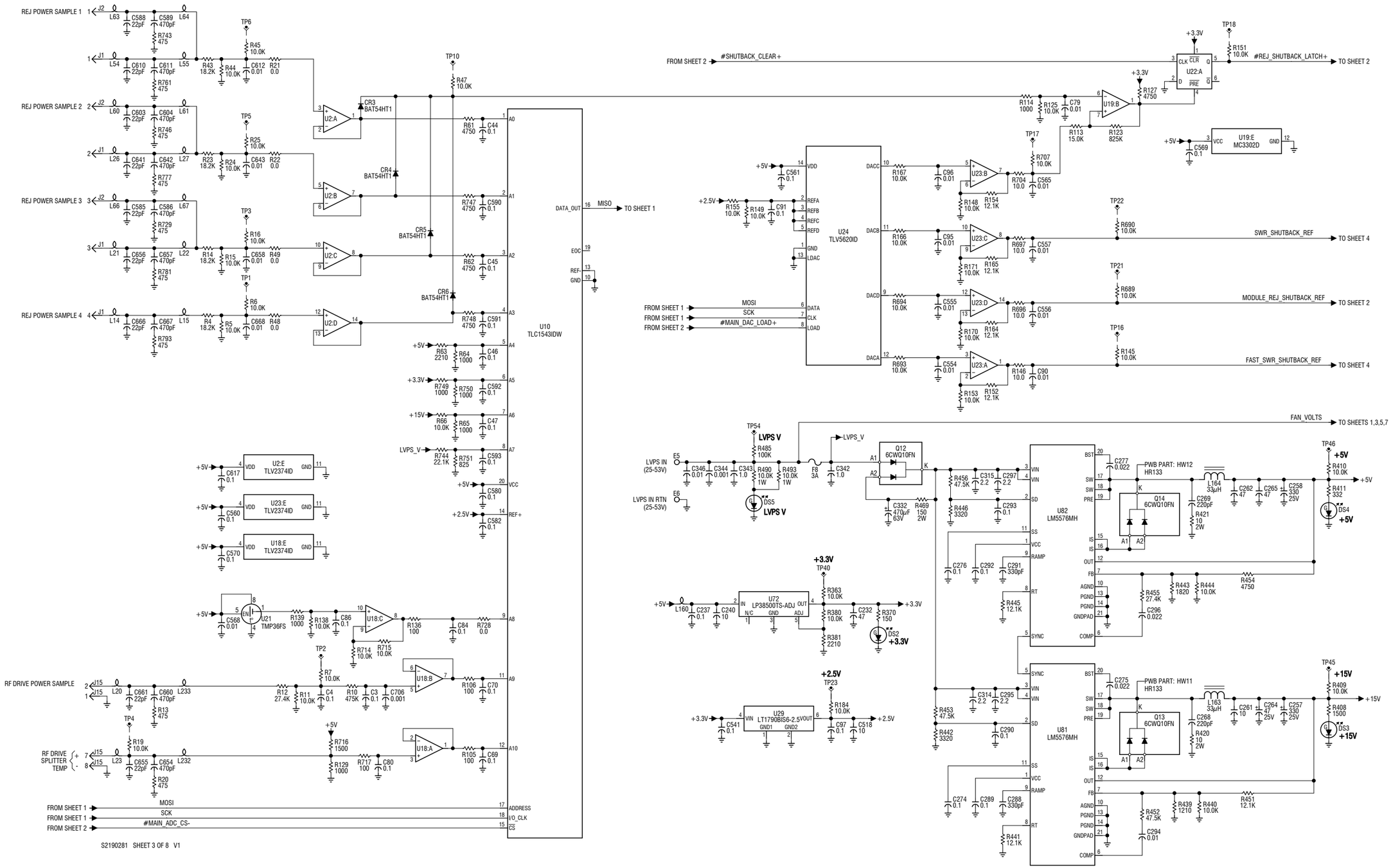

Figure SD-11: NAPC158B Module Control/Interface PWB (Sheet 3 of 8)

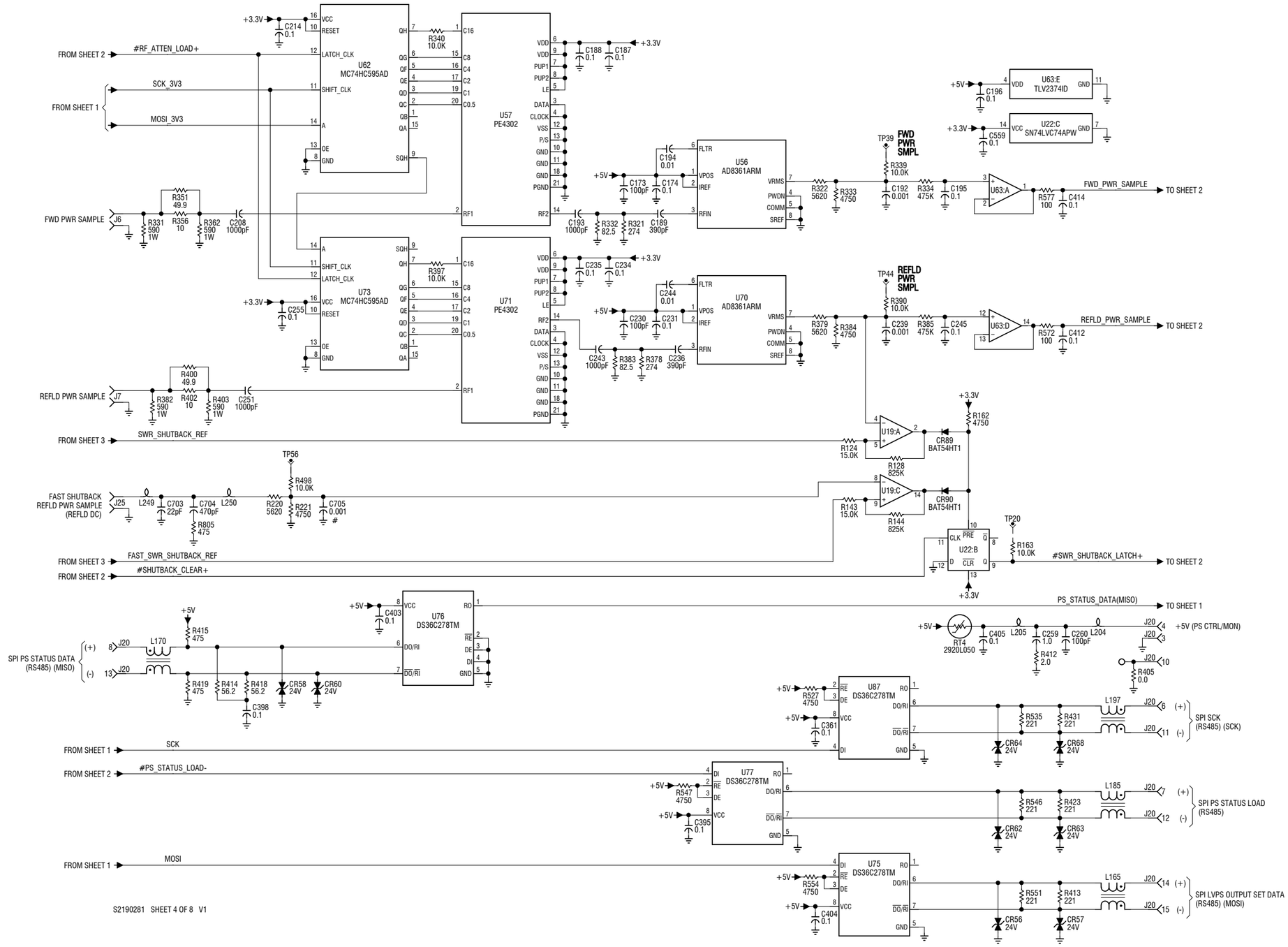

Figure SD-12: NAPC158B Module Control/Interface PWB (Sheet 4 of 8)

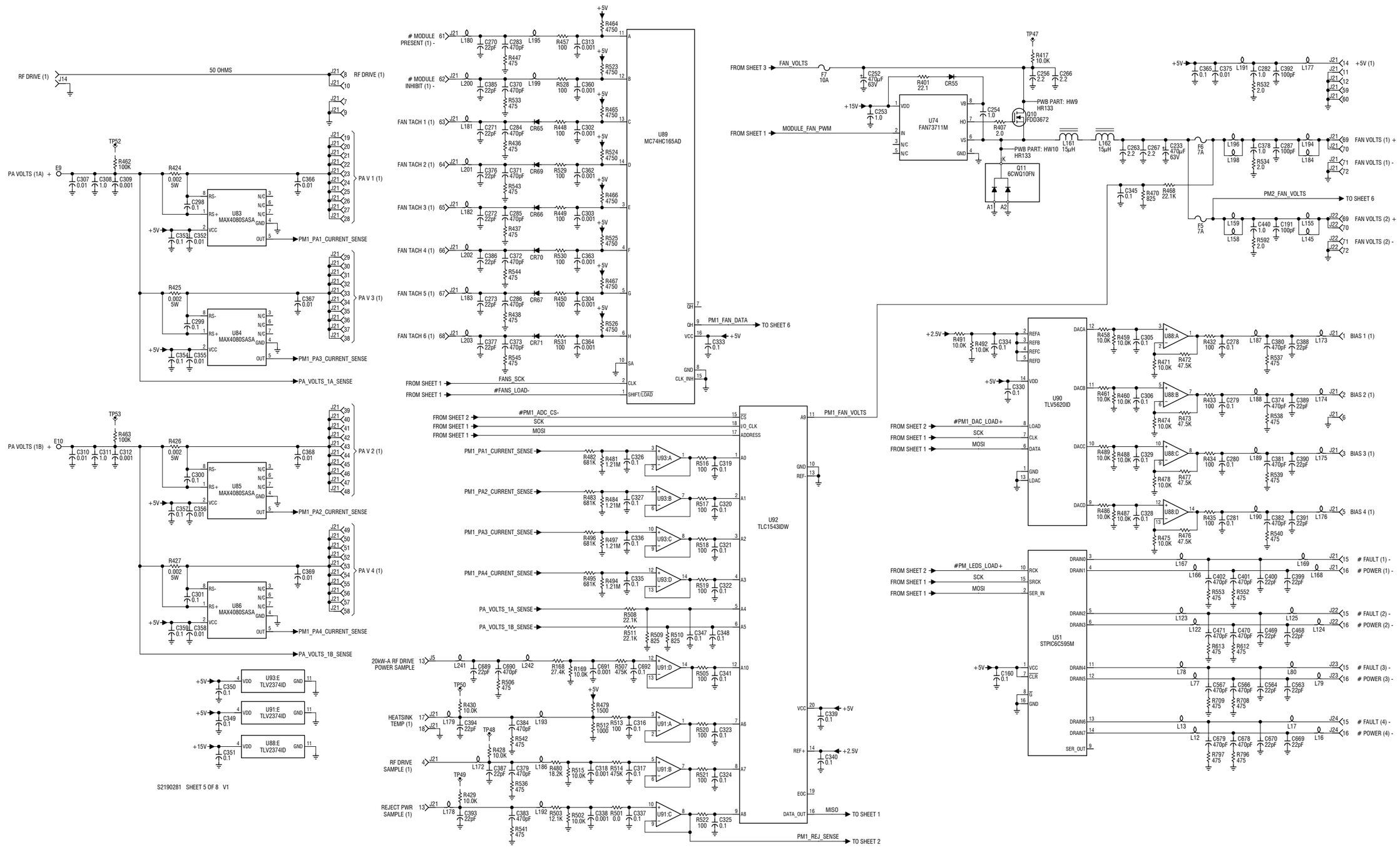

Figure SD-13: NAPC158B Module Control/Interface PWB (Sheet 5 of 8)

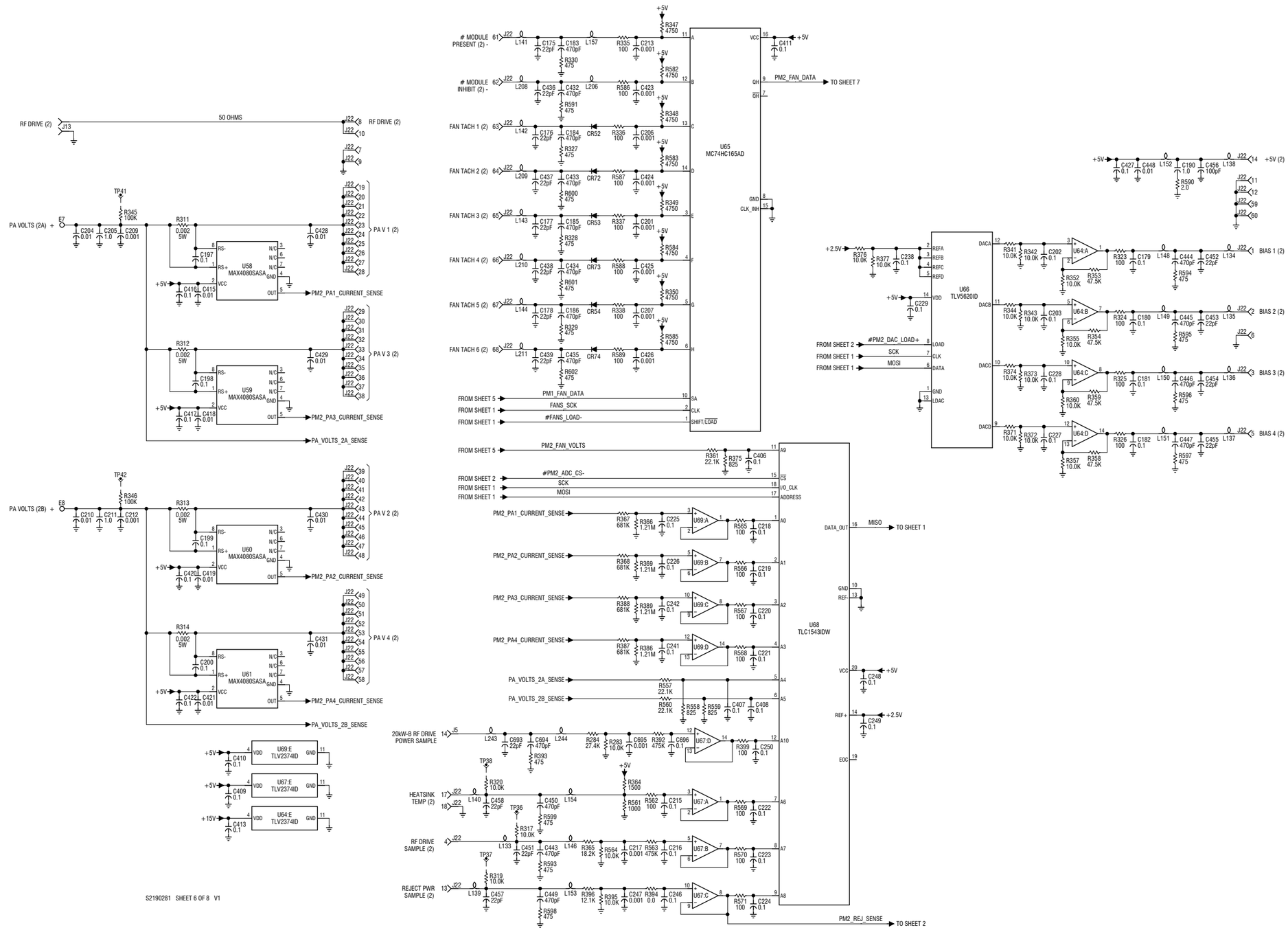

Figure SD-14: NAPC158B Module Control/Interface PWB (Sheet 6 of 8)

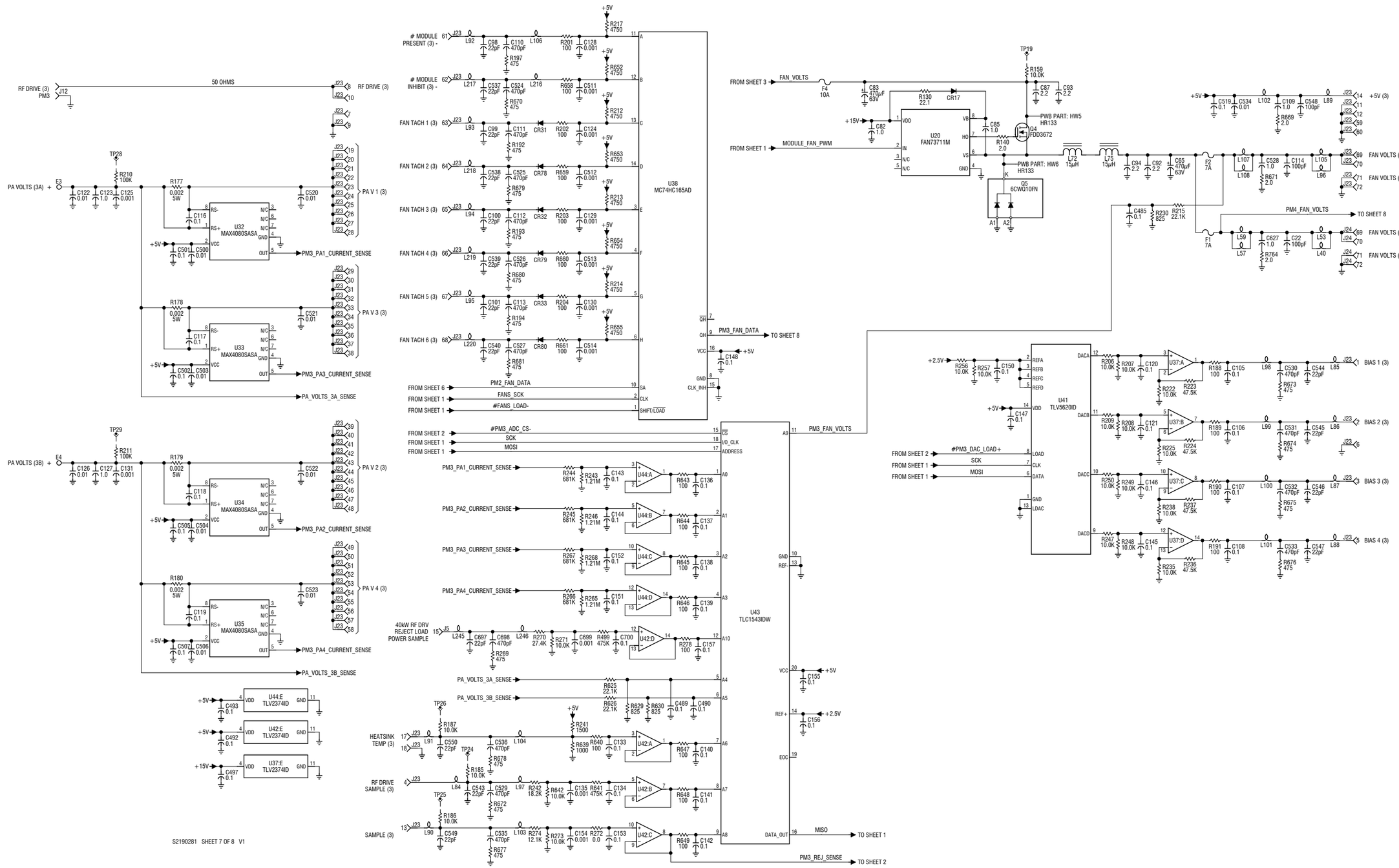

Figure SD-15: NAPC158B Module Control/Interface PWB (Sheet 7 of 8)

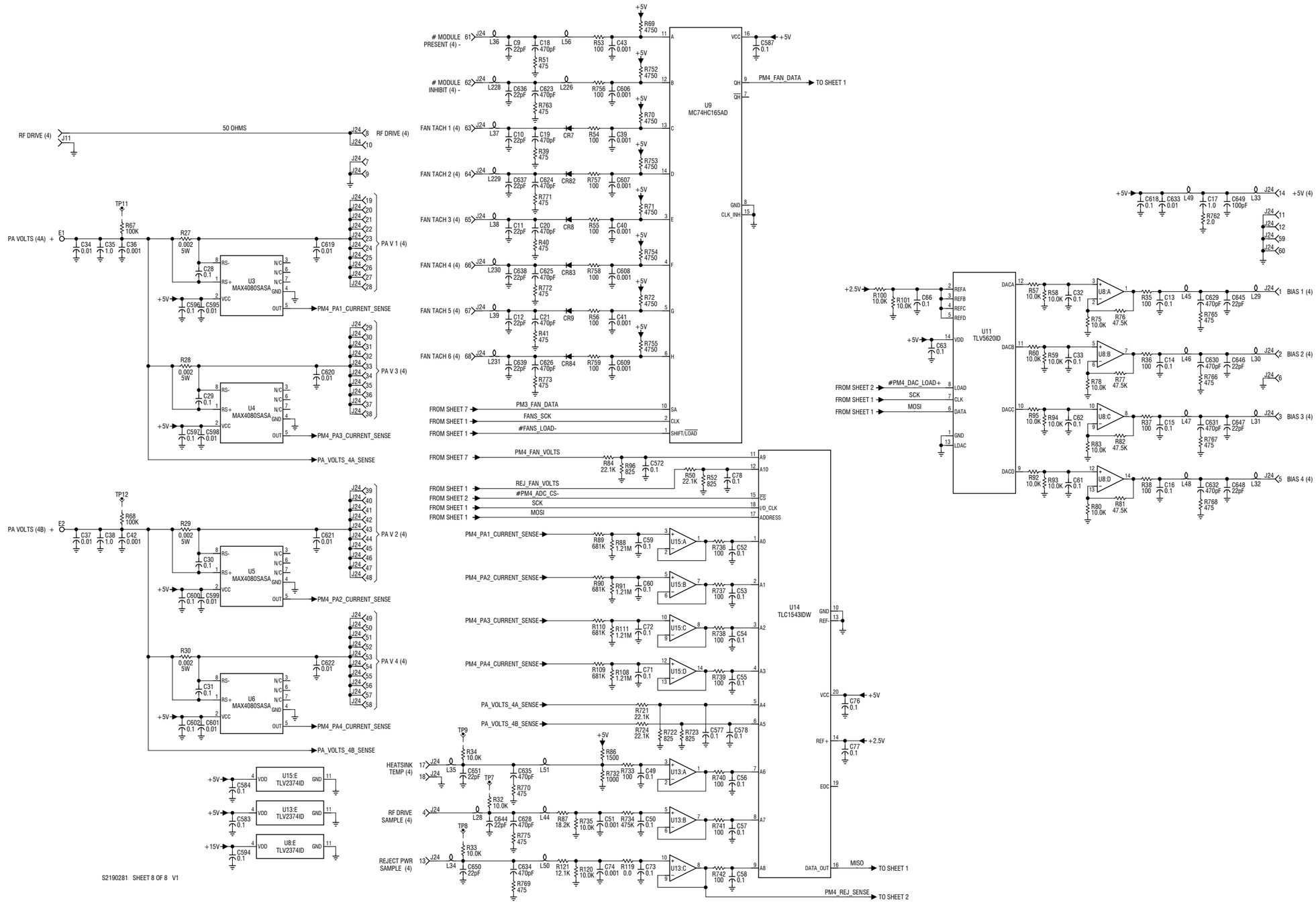

Figure SD-16: NAPC158B Module Control/Interface PWB (Sheet 8 of 8)

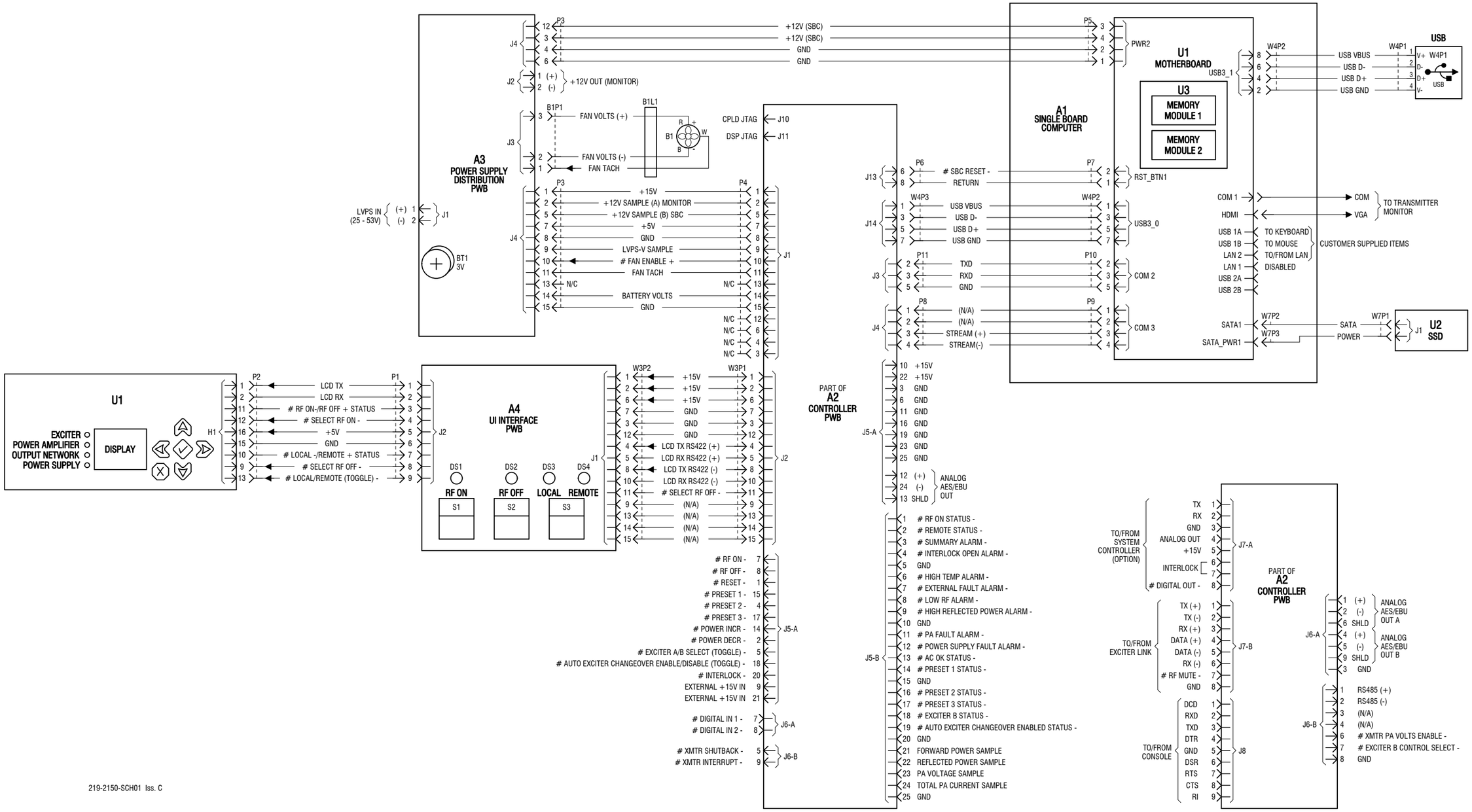

Figure SD-17: NAC124 Controller

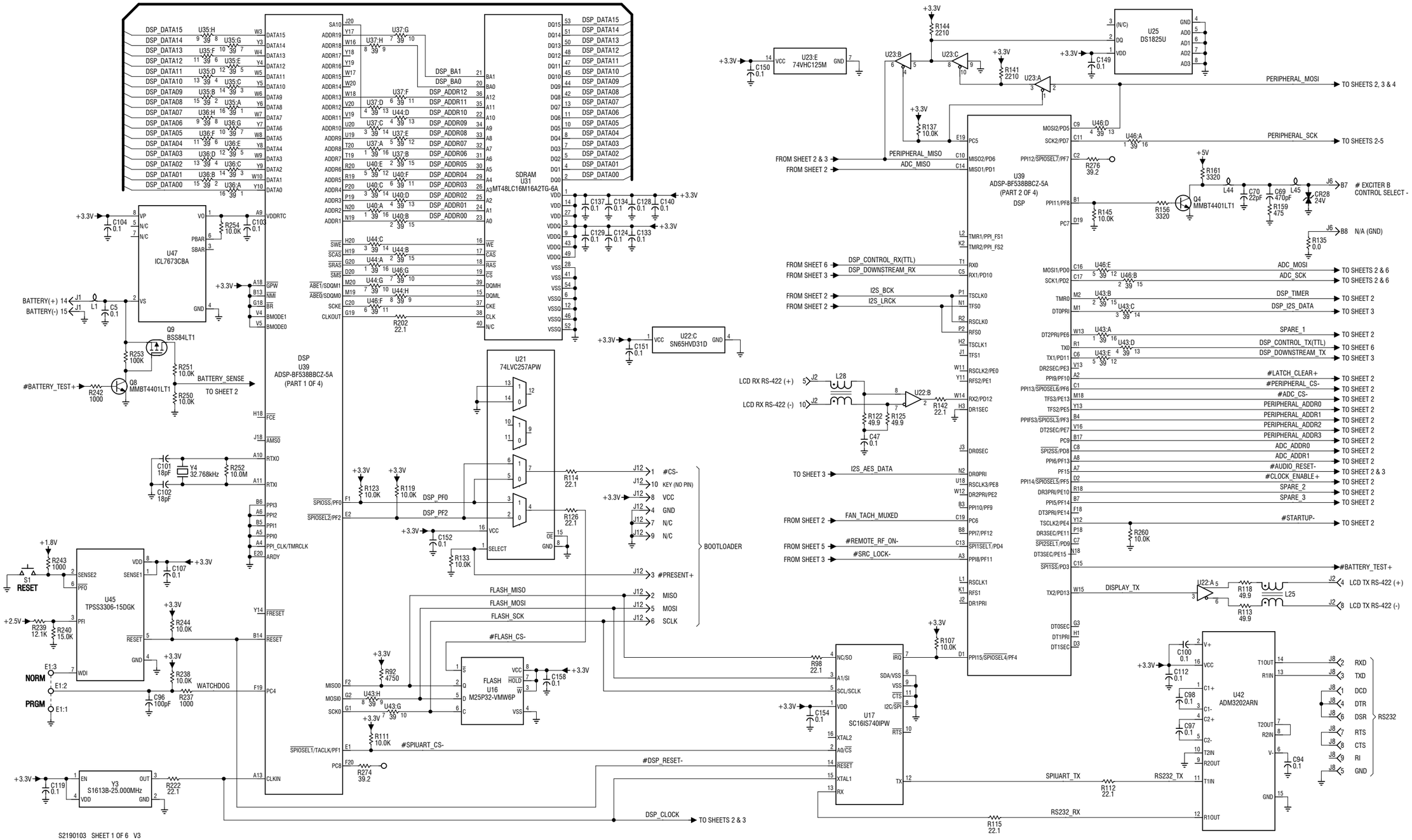

Figure SD-18: NAPC163 Controller PWB (Sheet 1 of 6)

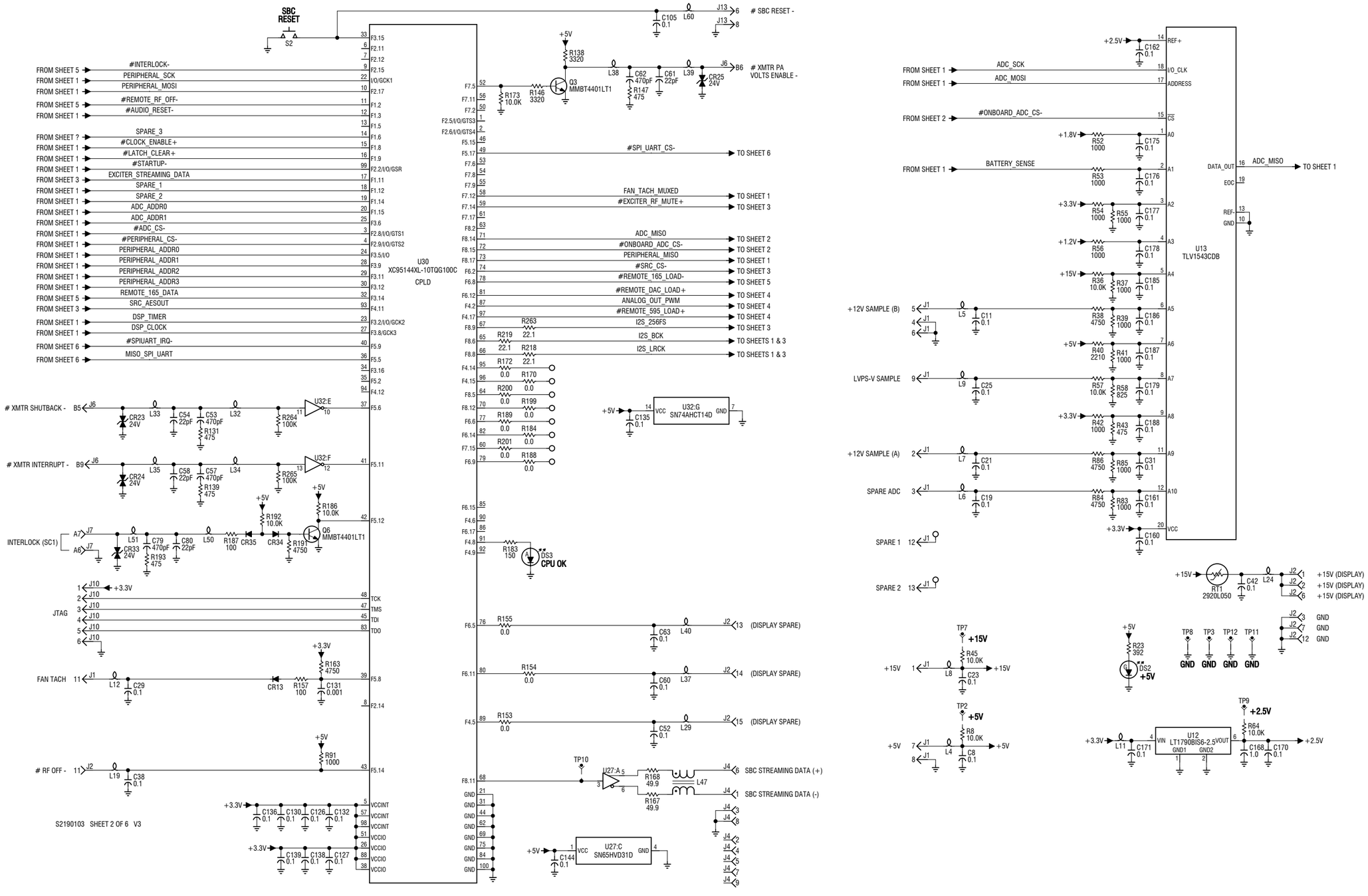

Figure SD-19: NAPC163 Controller PWB (Sheet 2 of 6)

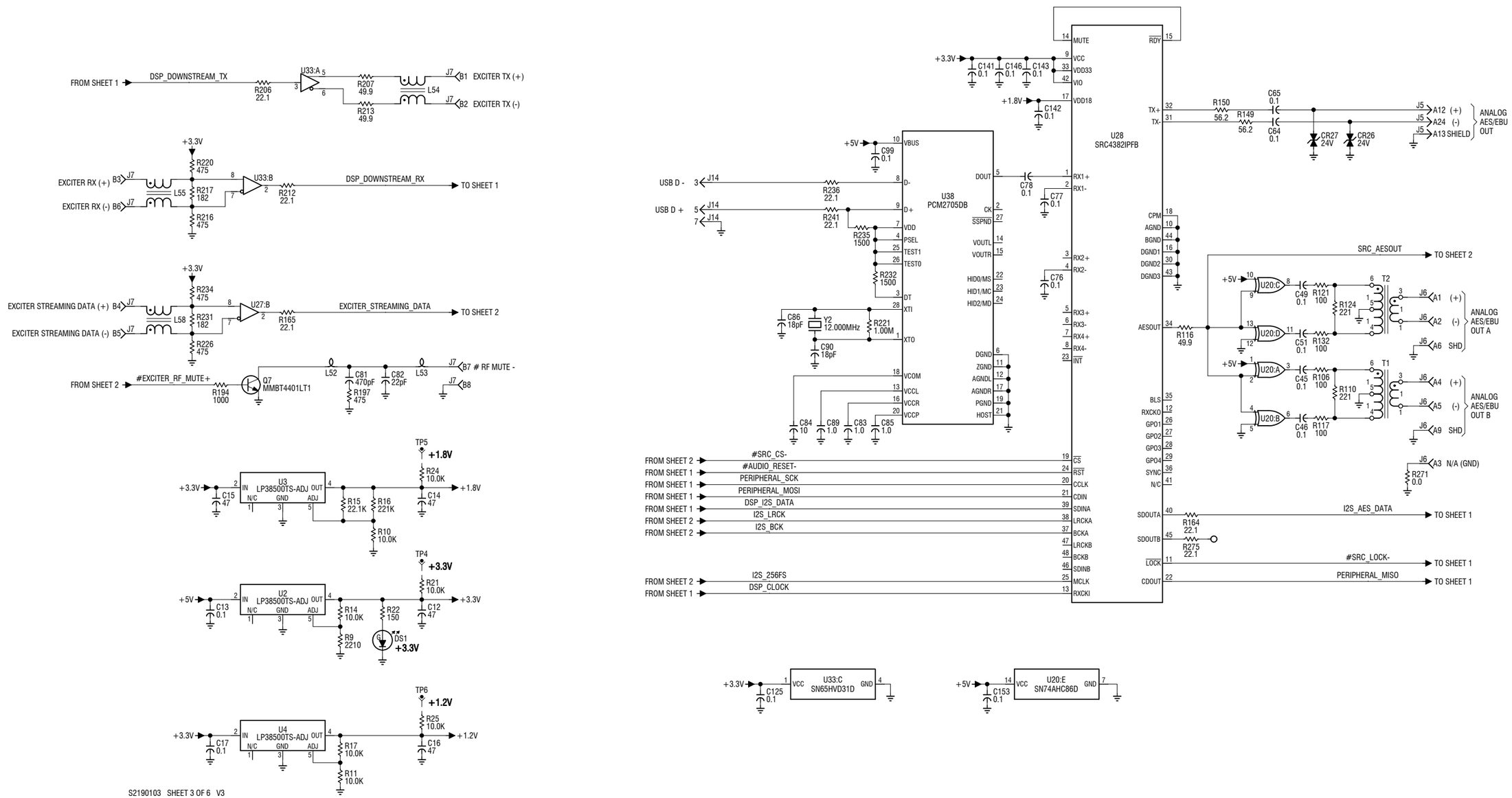

Figure SD-20: NAPC163 Controller PWB (Sheet 3 of 6)

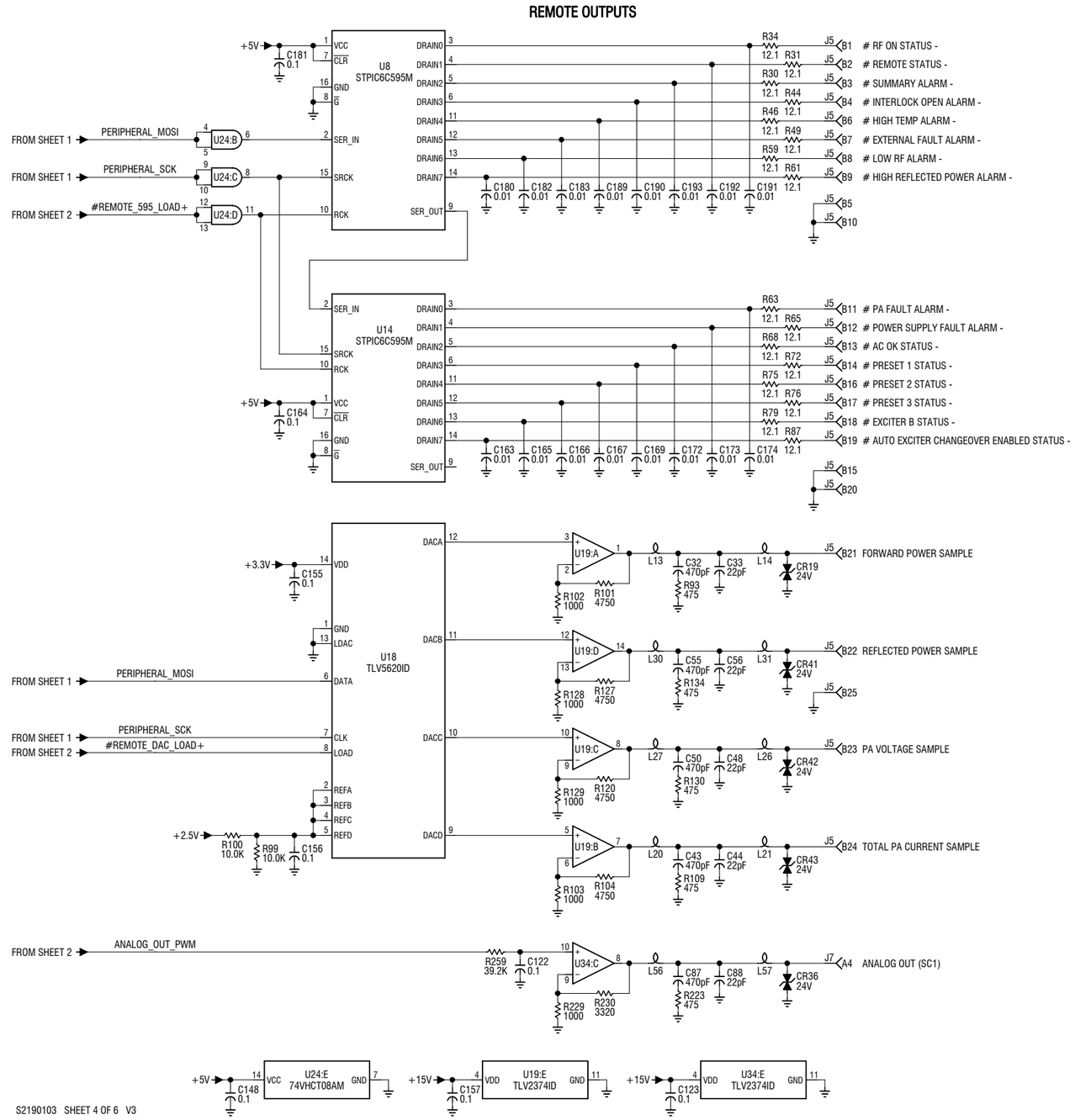

Figure SD-21: NAPC163 Controller PWB (Sheet 4 of 6)

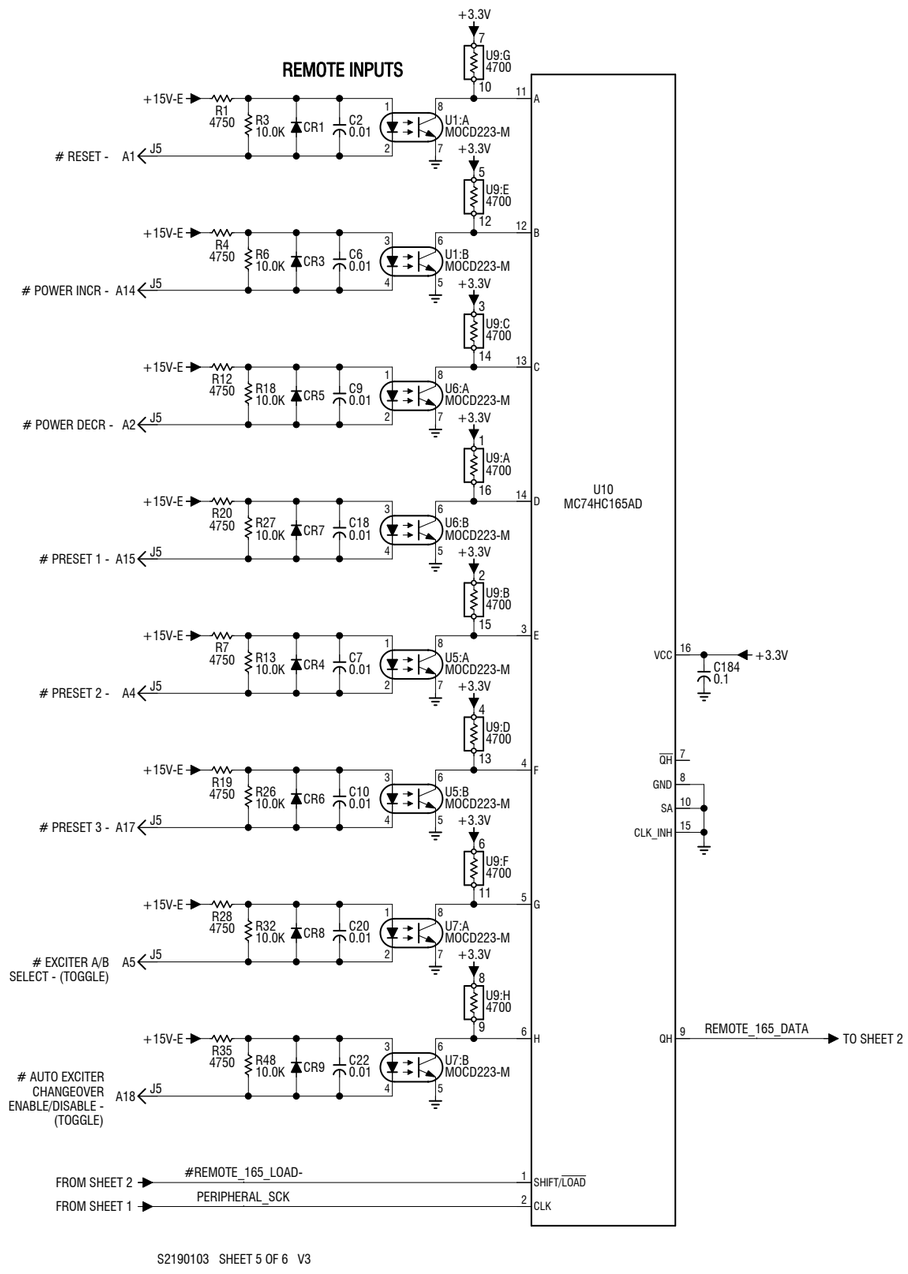

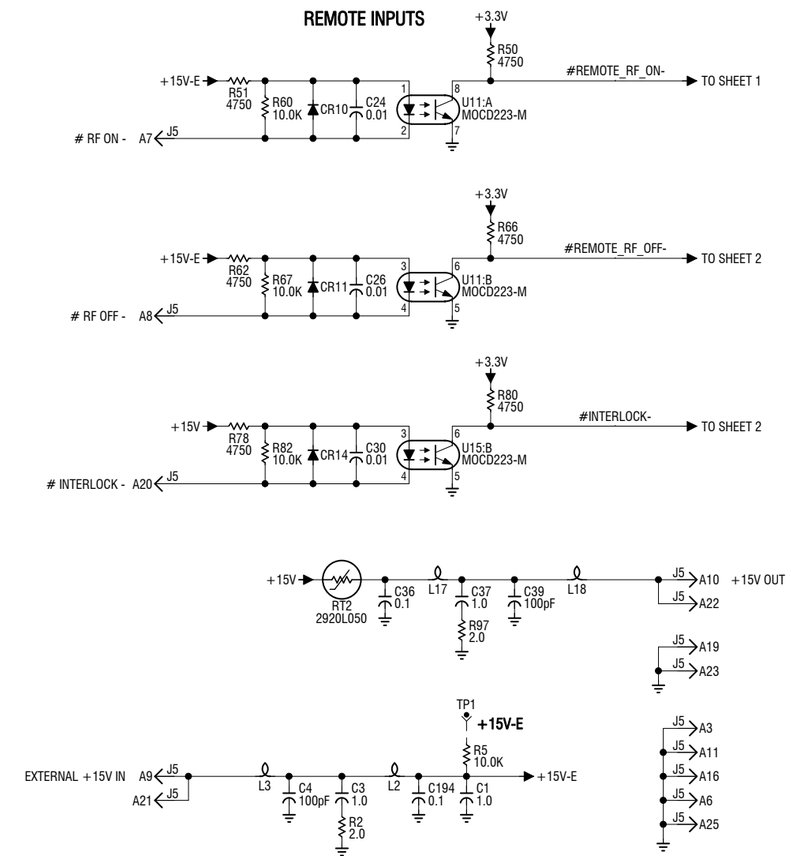

Figure SD-22: NAPC163 Controller PWB (Sheet 5 of 6)

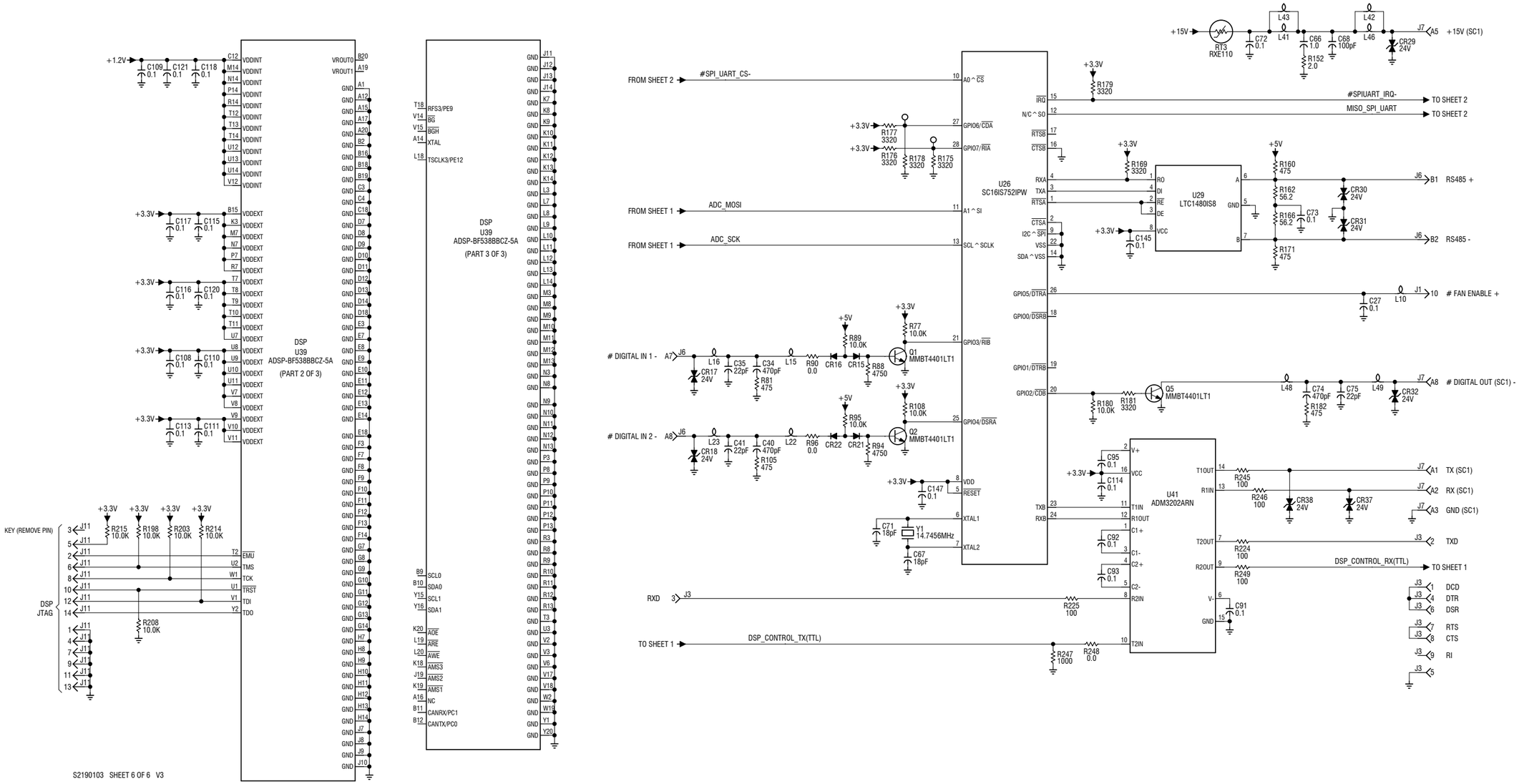

Figure SD-23: NAPC163 Controller PWB (Sheet 6 of 6)

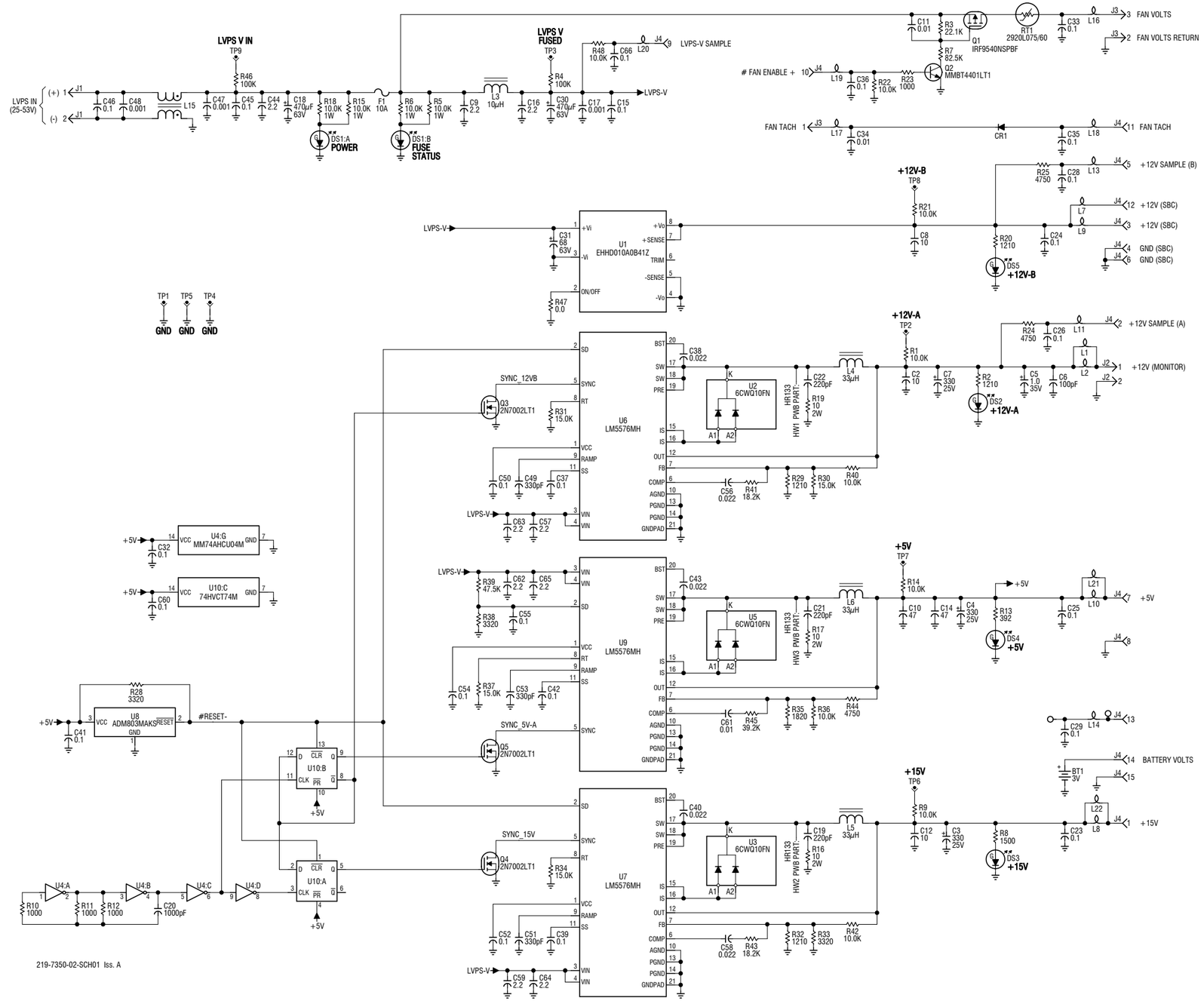

Figure SD-24: NAPS49B Power Supply Distribution PWB

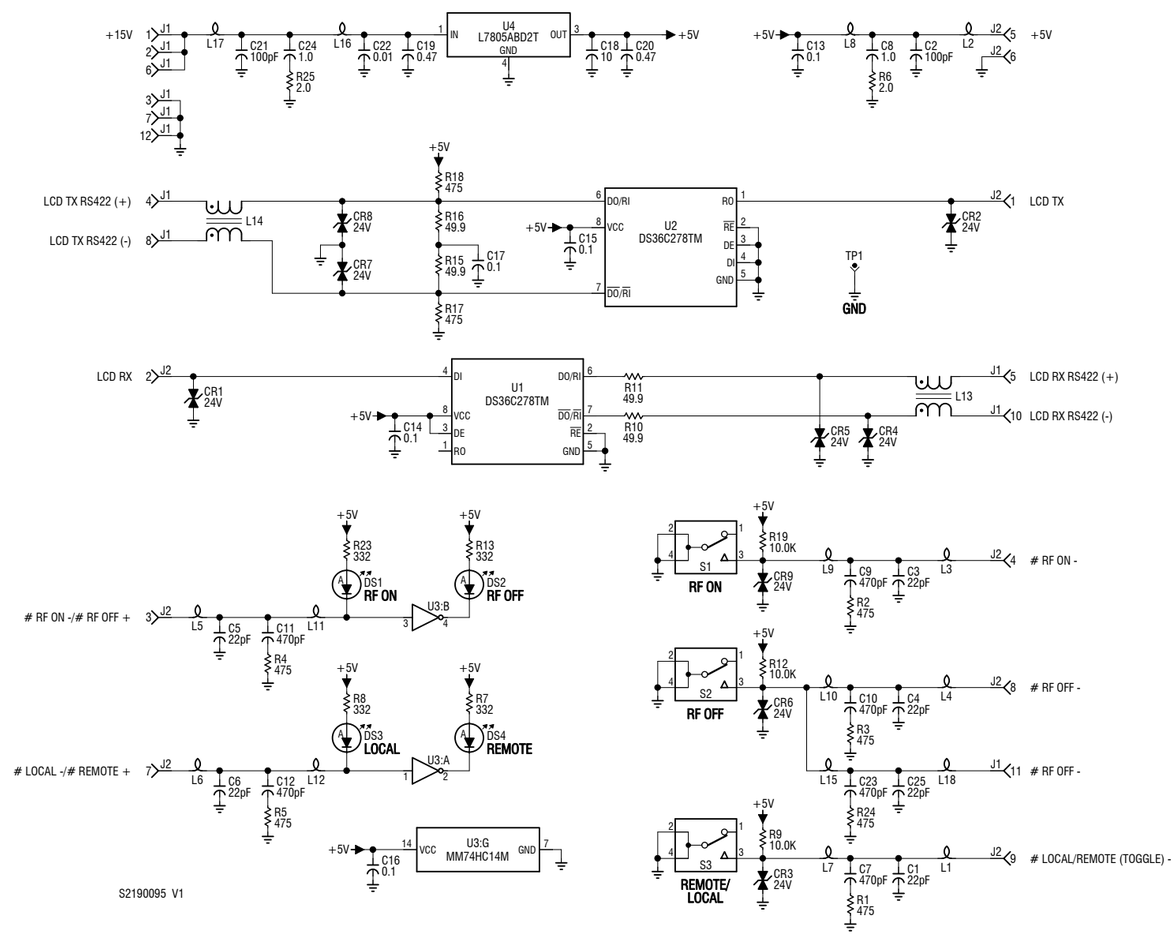

Figure SD-25: NAPI142A/01 UI Interface PWB

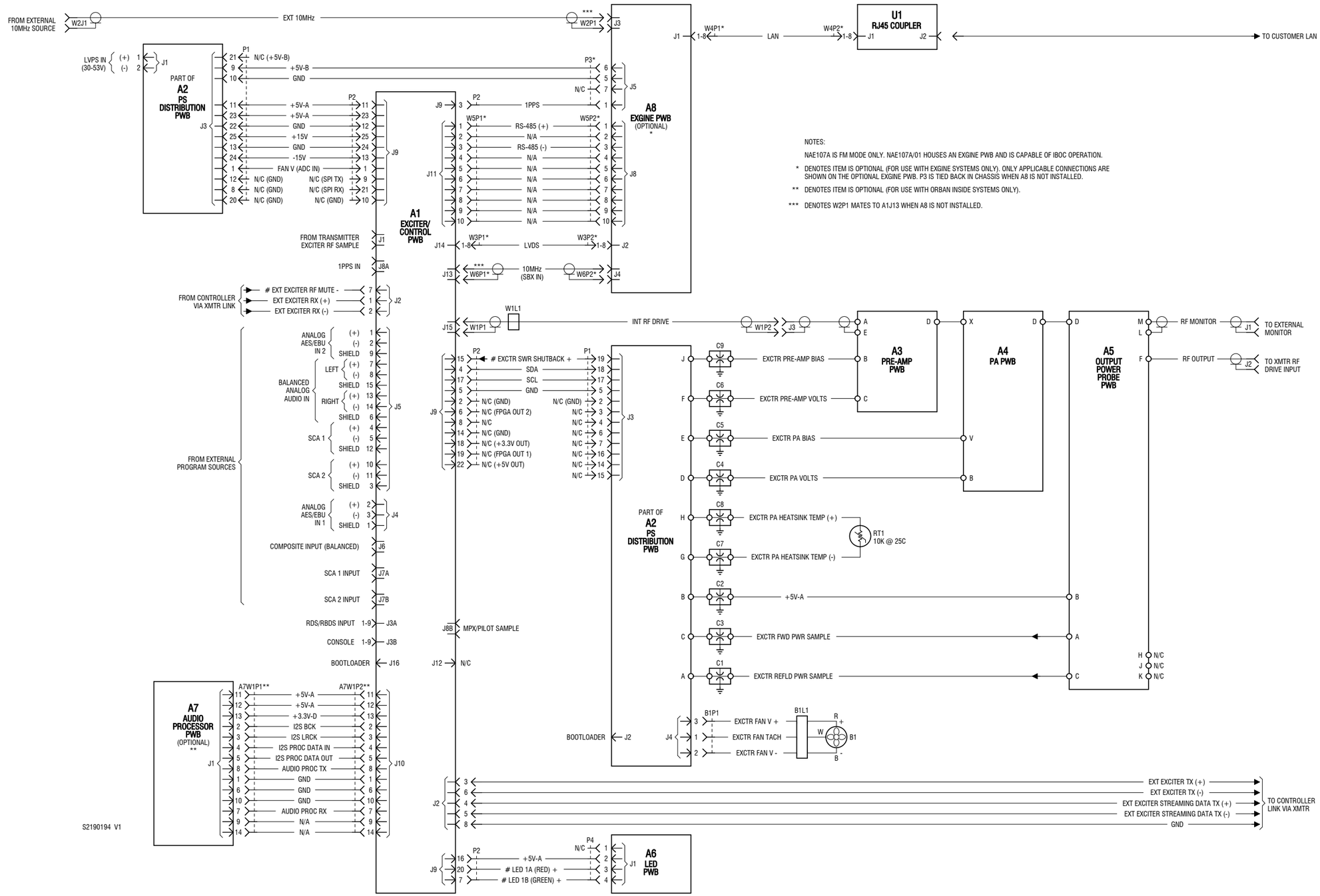

Figure SD-26: NAE107D or NAE107D/01 Exciter

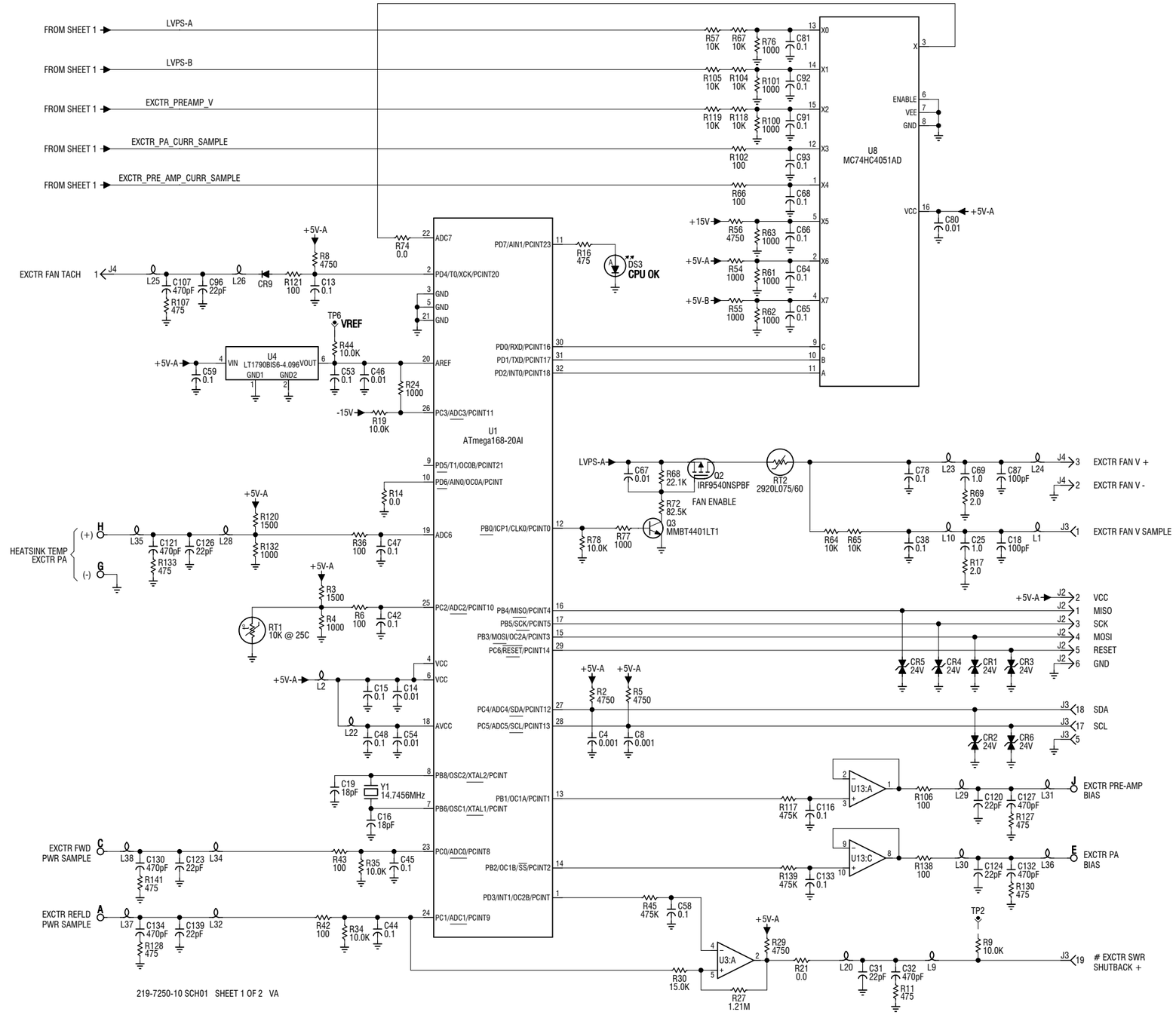

Figure SD-27: NAPS47E/01 Power Supply Distribution PWB (Sheet 1 of 2)

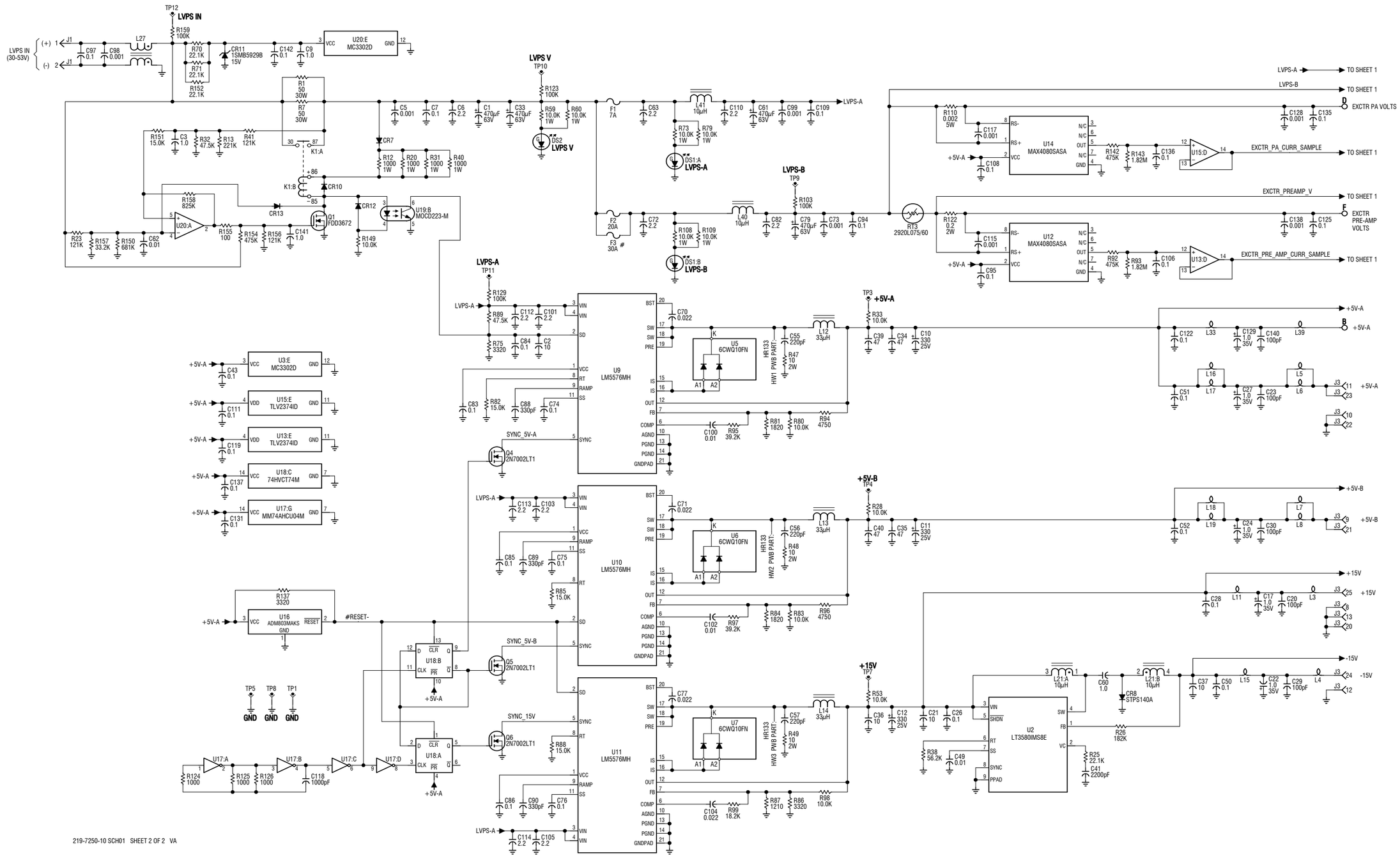

Figure SD-28: NAPS47E/01 Power Supply Distribution PWB (Sheet 2 of 2)

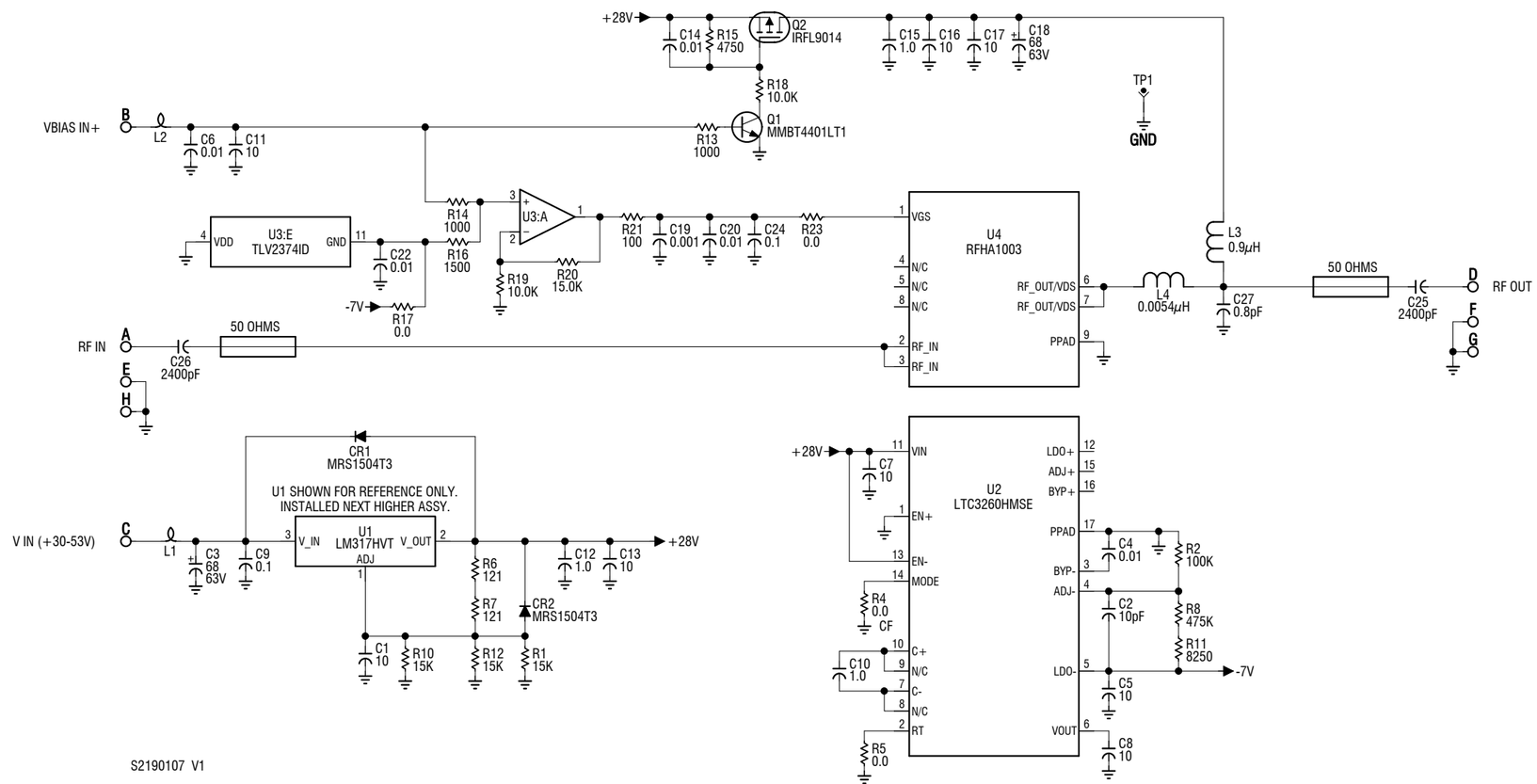

Figure SD-29: NAPA35 Pre-Amplifier PWB

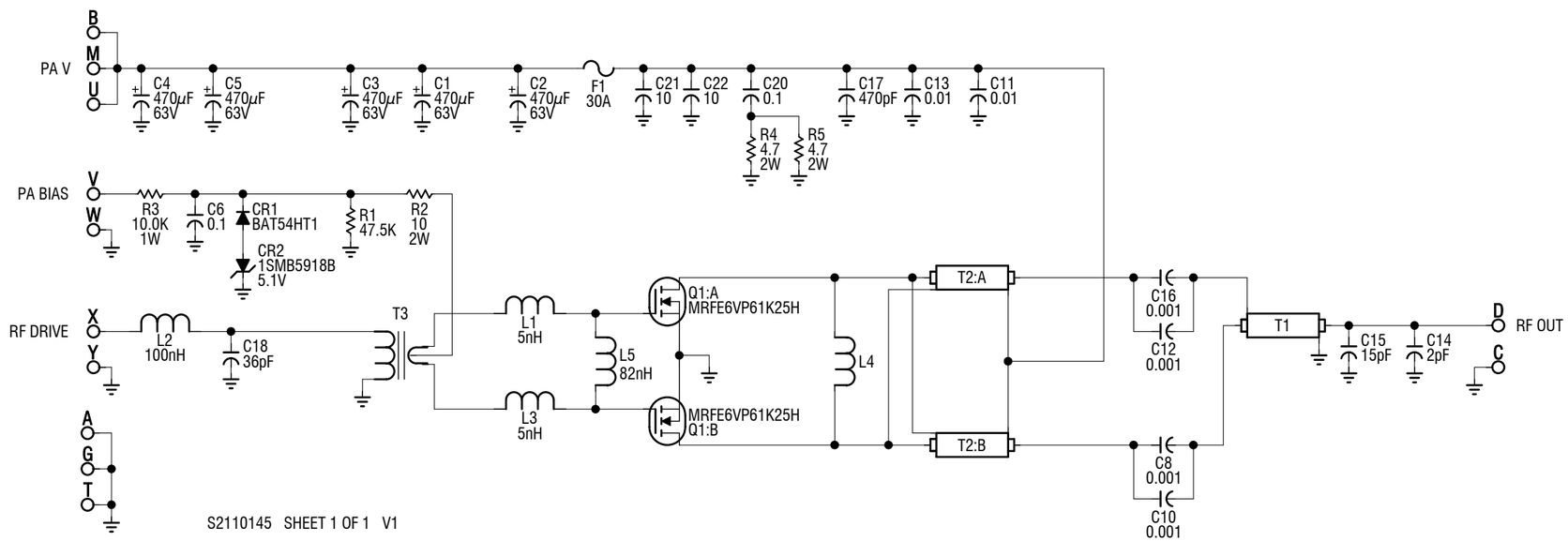

Figure SD-30: NAPA31C Power Amplifier PWB

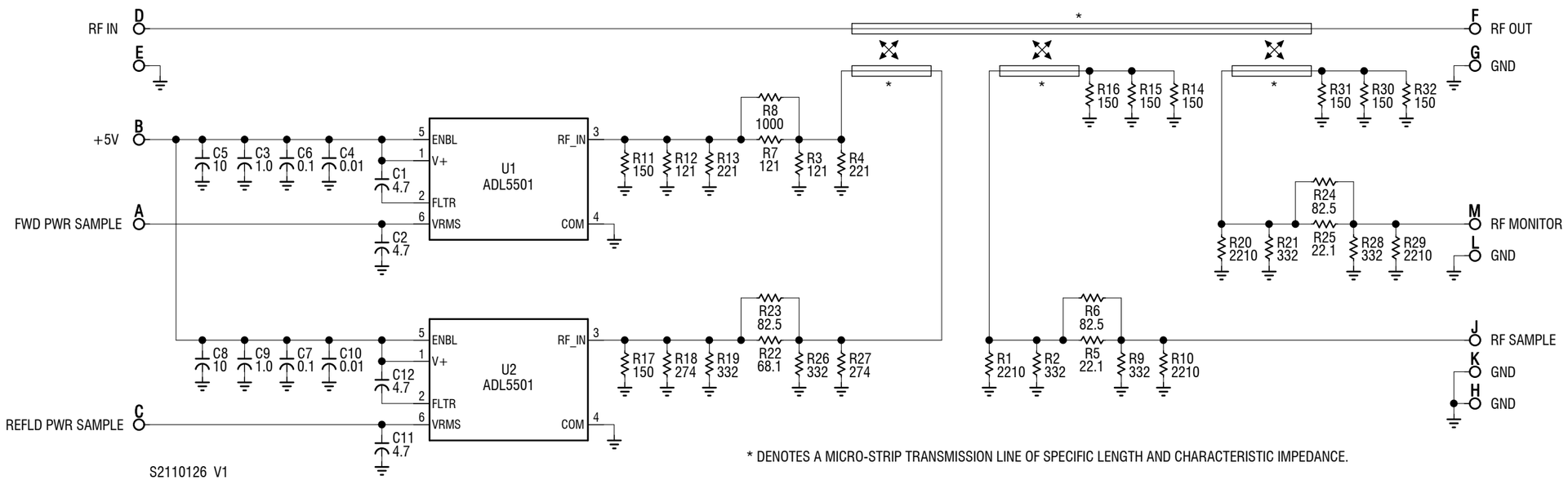

Figure SD-31: NAPP06/01 Output Power Probe PWB

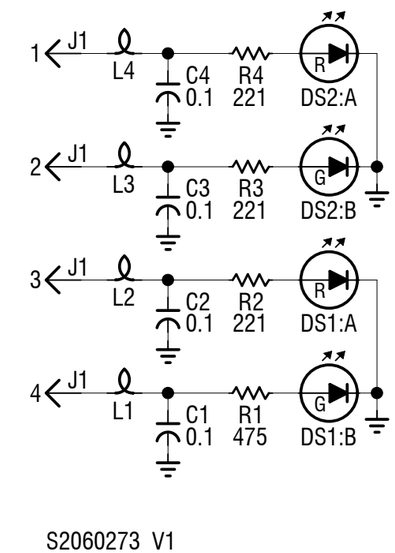

Figure SD-32: LED PWB (206-3060)

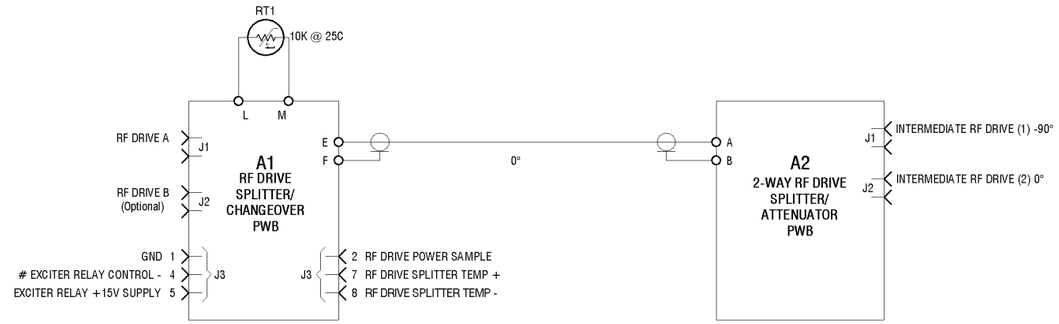

A1 DETAIL
NAPH09/01A RF Drive
Splitter/Changeover PWB

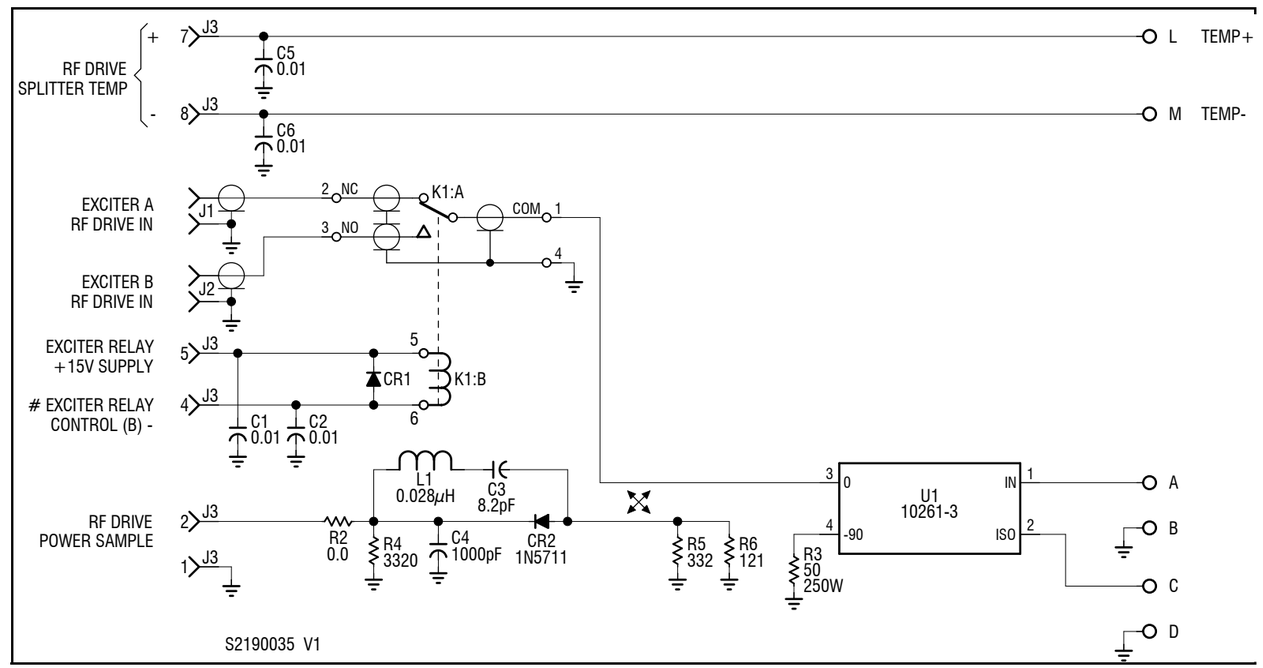

A2 DETAIL
NAPH10 2-Way RF Drive
Splitter/Attenuator PWB

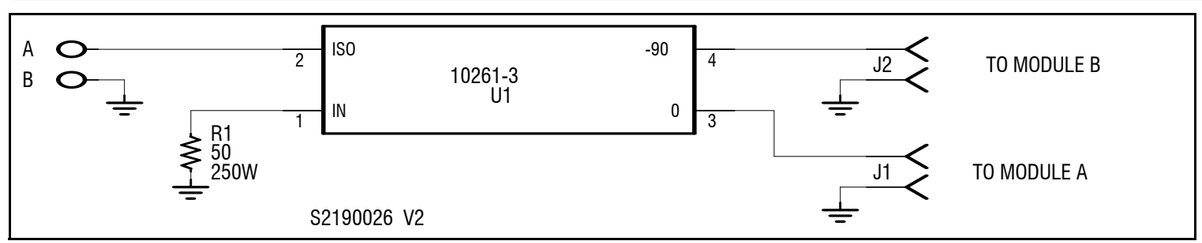

Figure SD-33: NAI22A/01 RF Drive Splitter/Changeover Assembly

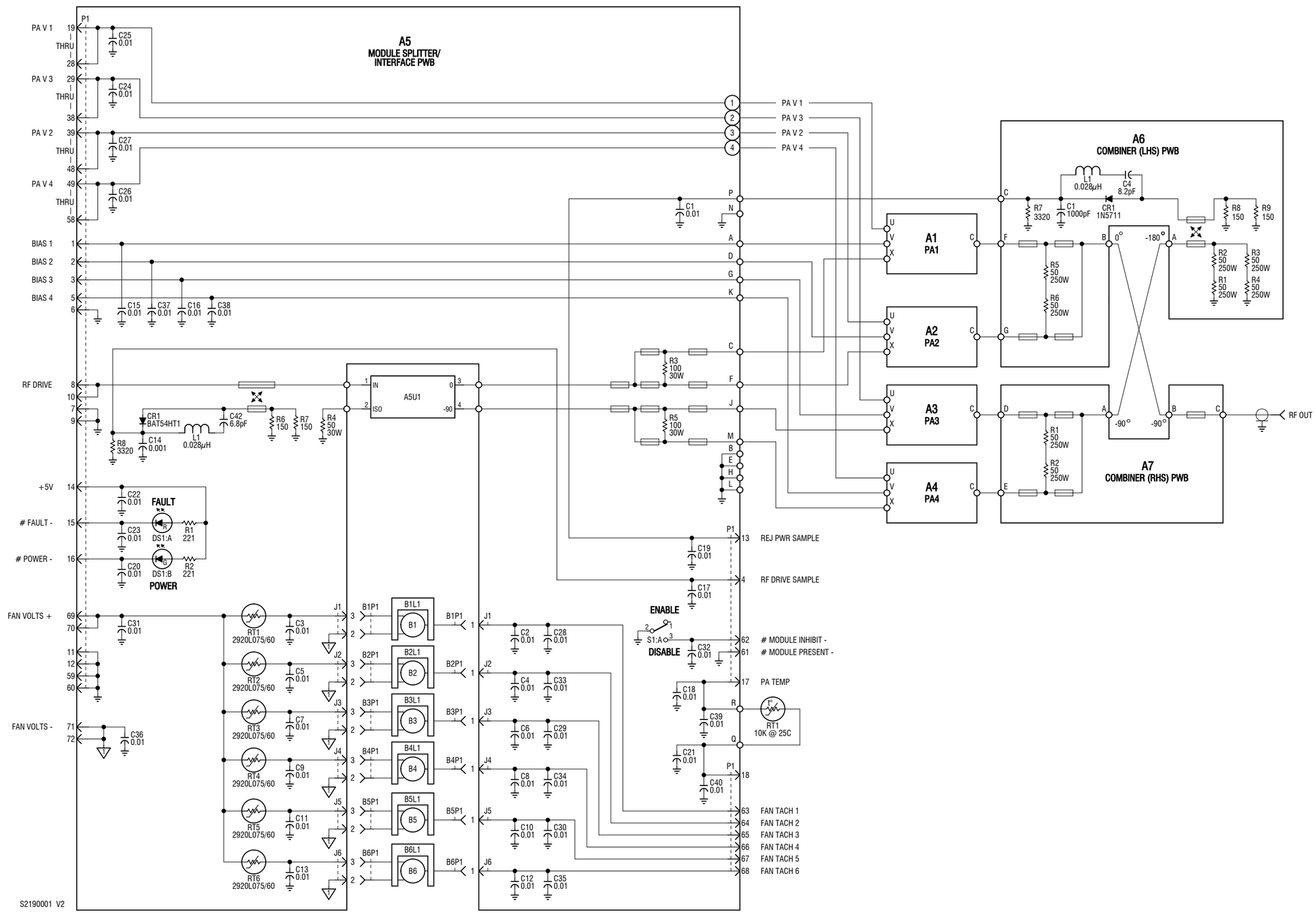

Figure SD-34: NAA61C RF Power Module

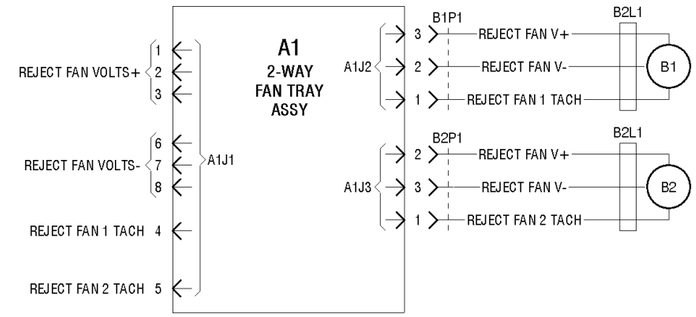

A1 DETAIL
NAPI155 2-Way
Fan Tray Interface PWB

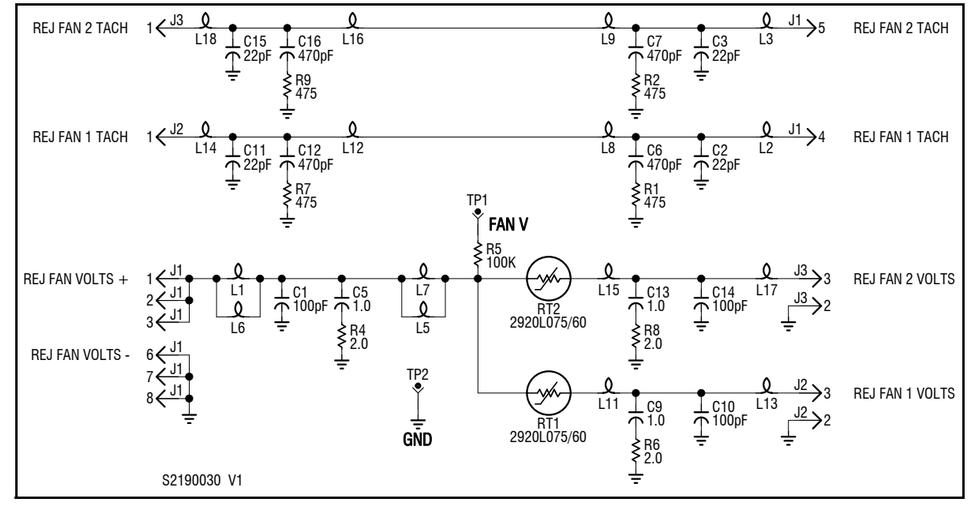

Figure SD-35: NAX264 2-Way Fan Tray Assembly

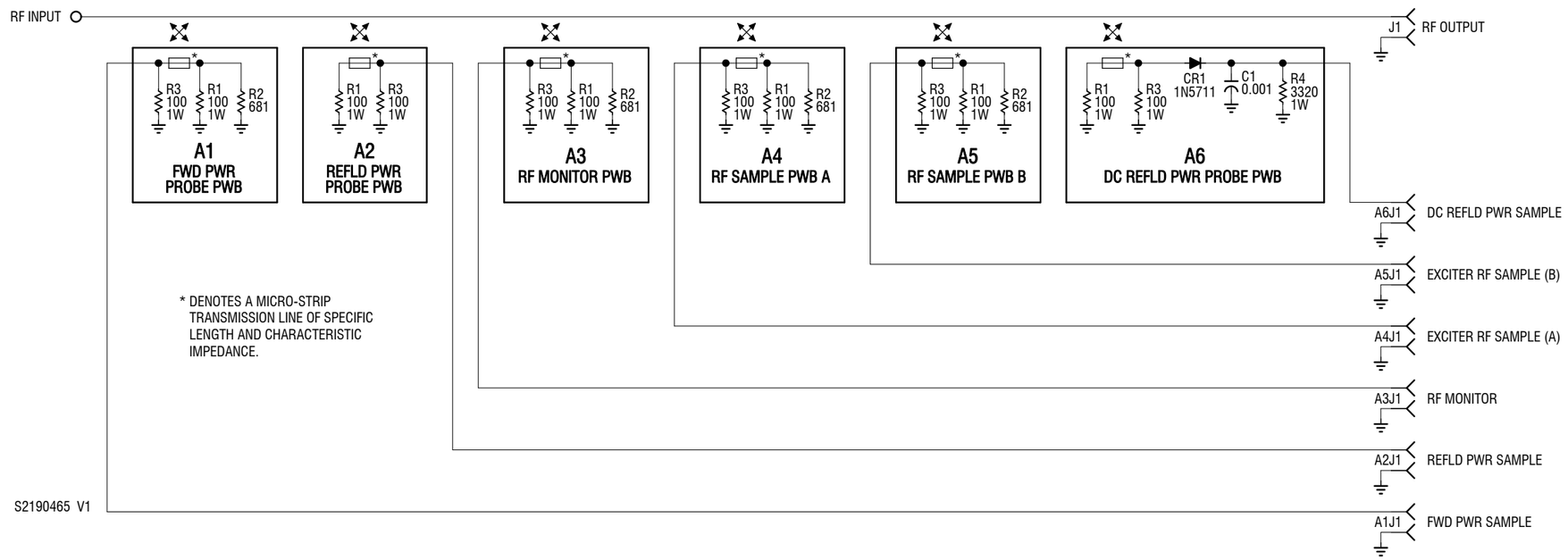

Figure SD-36: NAFP109B Output Power Probe and Sample PWBs

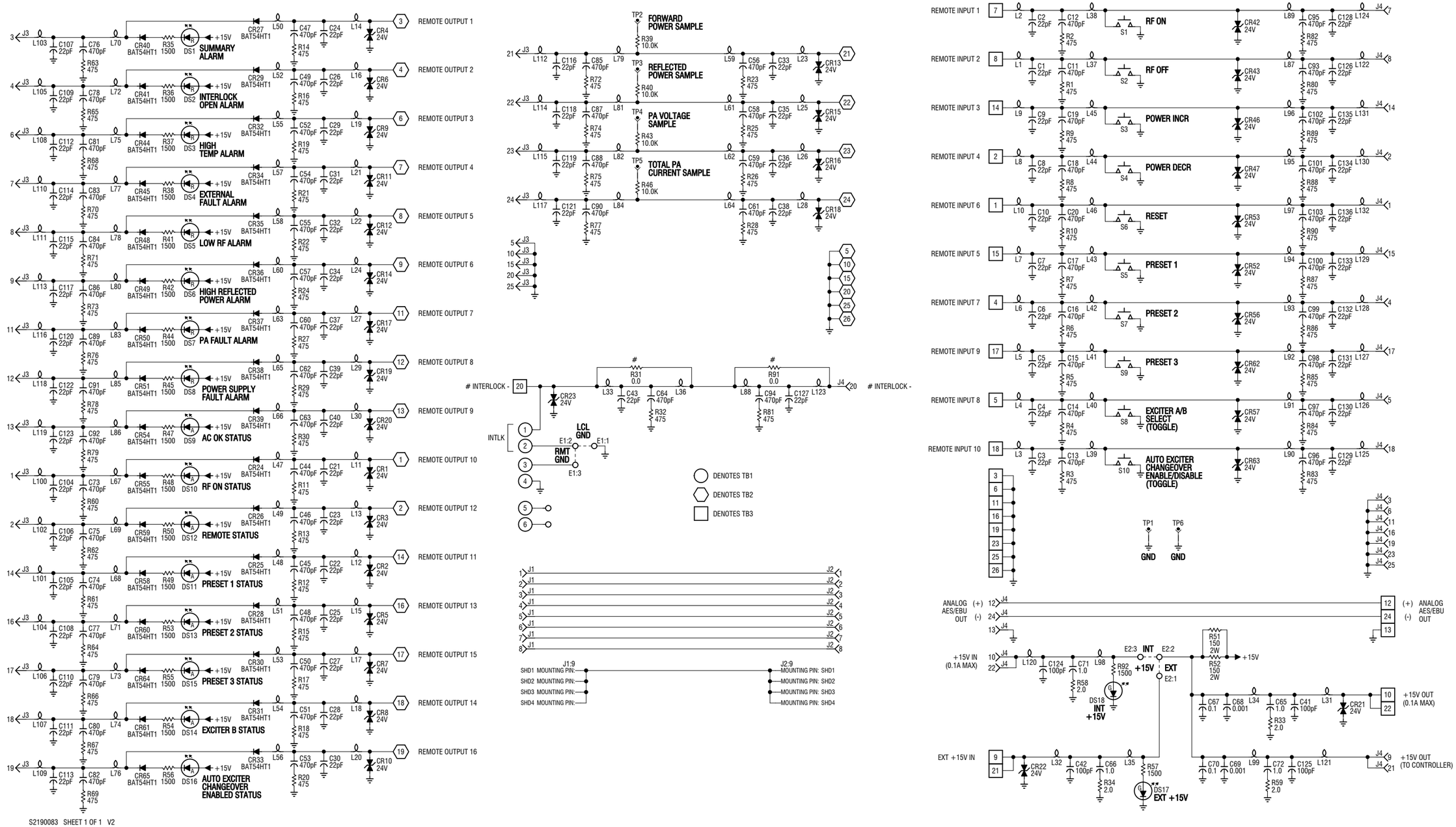

Figure SD-37: NAPI143/01 Remote Interface PWB

Nautel Part # 219-5178-01
UPS Interface Upgrade Kit

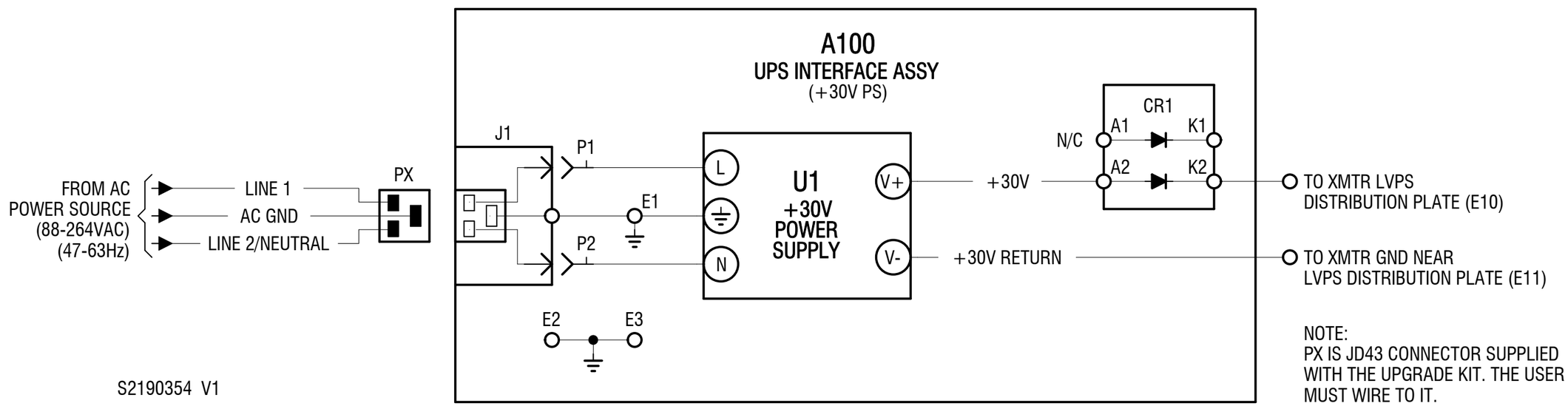

Figure SD-38: UPS Interface Assembly (Optional)

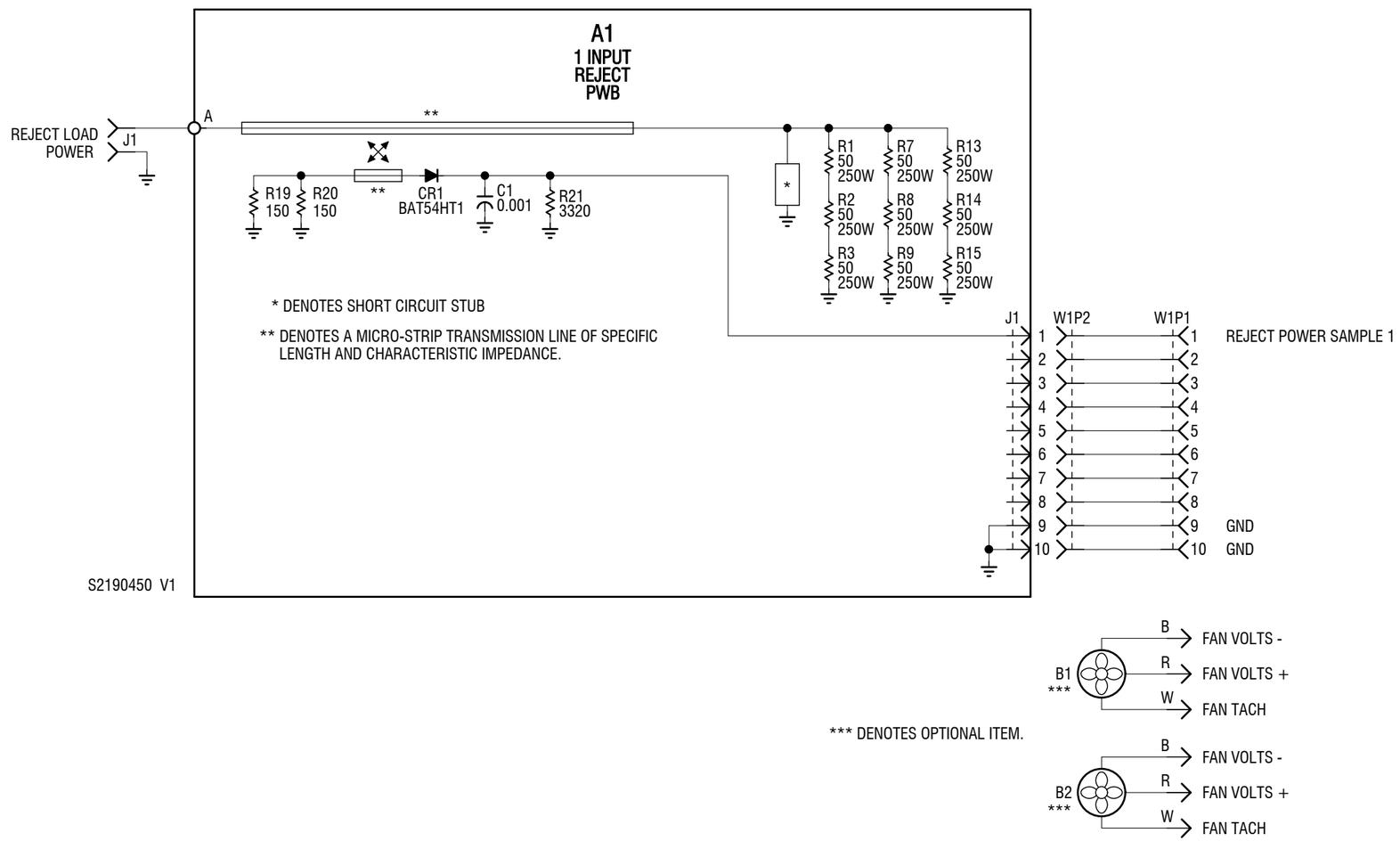

Figure SD-39: NAL14 Reject Load Assembly

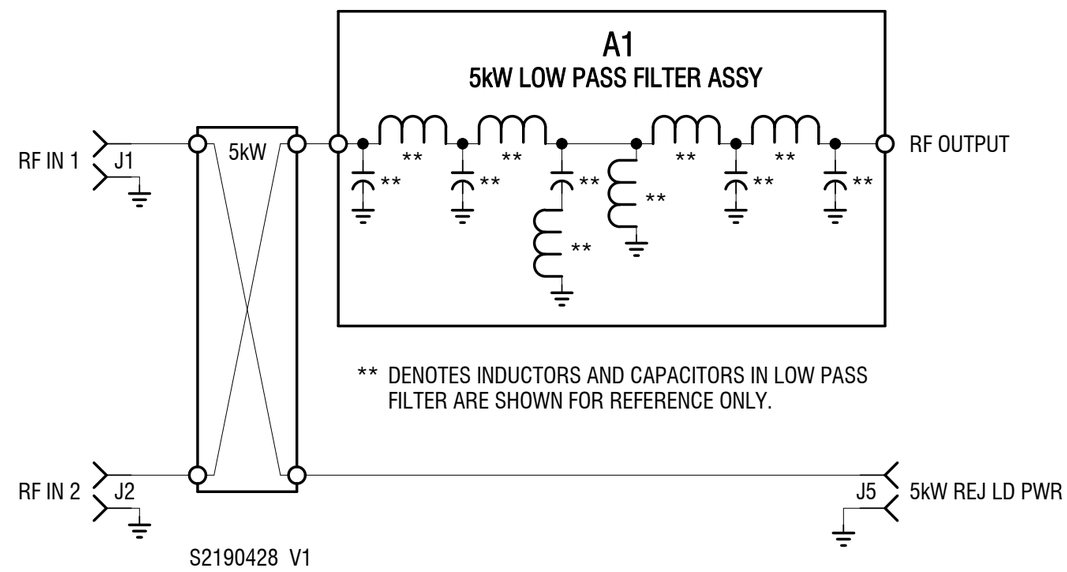

Figure SD-40: NAF119A/03 Combiner/Filter Assembly

SECTION 4.5: MECHANICAL DRAWINGS

This section contains mechanical drawings for assemblies of the transmitter. Dimensional drawings may be included. Refer to Table 4.5.1 on page 4.5.2 for an itemized list.

Assembly detail drawings for assemblies and modules that have separate manuals are not included. Refer to the appropriate maintenance manual for the assembly detail of these assemblies.

Identifying Mechanical Drawings

Each mechanical drawing in this section is identified by a number that is both the figure number and the page number. The numbers are assigned sequentially and are prefixed by the letters MD. Drawings in this section are listed in Table 4.5.1 on page 4.5.2.

Content of Mechanical Drawings

Mechanical drawings are illustrations that depict the location of electrical components and show assembly outline detail. Dimensional information is included, where appropriate.

When a module or assembly is the subject of its own assembly detail drawing, and it is also shown in a higher level assembly, the detail depicted in the higher level assembly may have minor differences from the module or assembly actually installed. In this case, always refer to the assembly detail drawing of the module or assembly for detailed information.

Locating a Part or Assembly on a Mechanical Drawing

1. When a part or assembly is assigned a reference designation (e.g., A2A1 or A2A1R1), refer to the family trees in Section 4.2, "Parts Lists" on page 4.2.1. Follow the family tree branches to the block that contains the desired reference designation and Nautel nomenclature (e.g., NAPA31C Power Amplifier PWB). Note the reference designations and Nautel nomenclatures of all higher assemblies in the path.
   Example: A8 NAA61C RF Module 1 -> A8A1 NAPA31C Power Amplifier PWB.

2. Refer to Table 4.5.1 on page 4.5.2. Use the reference designation and Nautel nomenclature to identify the appropriate mechanical drawing.
   Example: NAPA31C Power Amplifier PWB is shown on schematics MD-13.

3. If necessary, refer to the referenced figure (e.g., MD-13) in the mechanical drawings at the end of this section and locate the next, lower-level assembly. Then, repeat this procedure until the desired part or assembly is found.

Table 4.5.1: List of Mechanical Drawings

Figure #	Title
MD-1	GV5/GV3.5 Transmitter
MD-2	NAPI150A/01 Power Supply Interface PWB
MD-3	NAX273A Monitor Fan Assembly
MD-4	NAPI172A Monitor Fan Interface PWB
MD-5	NAPC158B Module Control/Interface PWB
MD-6	NAC124 Controller (with Integral Exciter A)
MD-7	NAPC163 Contoller PWB
MD-8	NAPS49B Power Supply Distribution PWB
MD-9	NAPI142A/01 UI Interface PWB
MD-10	NAE107D and NAE107D/01 Exciter Assembly
MD-11	NAPS47E/01 Power Supply Distribution PWB
MD-12	NAPA35 Pre-Amplifier PWB
MD-13	NAPA31C Power Amplifier PWB
MD-14	NAPP06/01 Output Power Probe PWB
MD-15	LED PWB (206-3060)
MD-16	NAI22A/01 RF Drive Splitter/Changeover Assembly
MD-17	NAA61C RF Power Module
MD-18	NAL14 1-Input Reject Load Assembly
MD-19	NAX264 2-Way Fan Tray Assembly
MD-20	NAPI155 2-Way Fan Tray Interface PWB
MD-21	NAFP109B Output Power Probe Assembly
MD-22	NAPI143/01 Remote Interface PWB

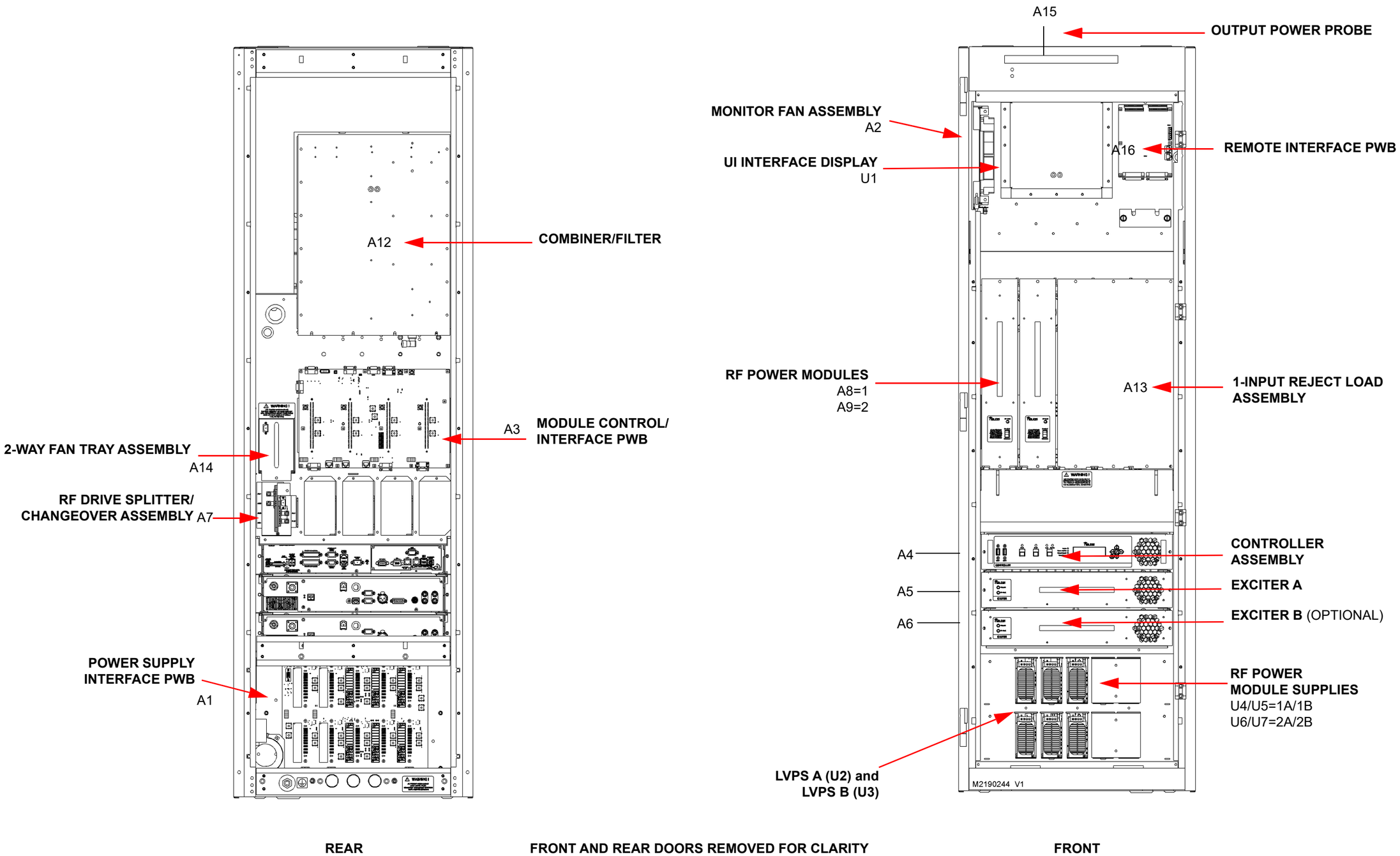

Figure MD-1: GV5/GV3.5 Transmitter

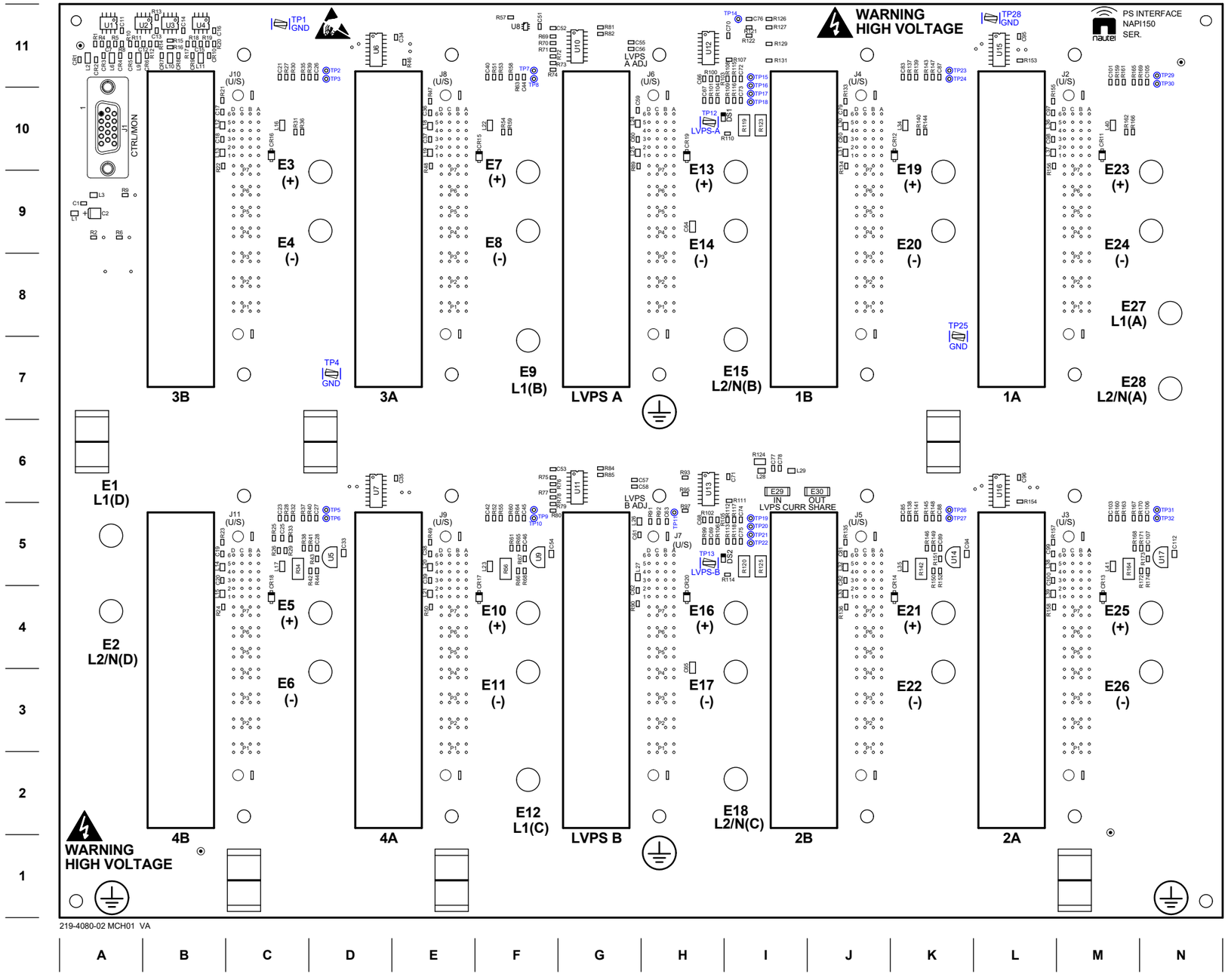

Figure MD-2: NAPI150A/01 Power Supply Interface PWB

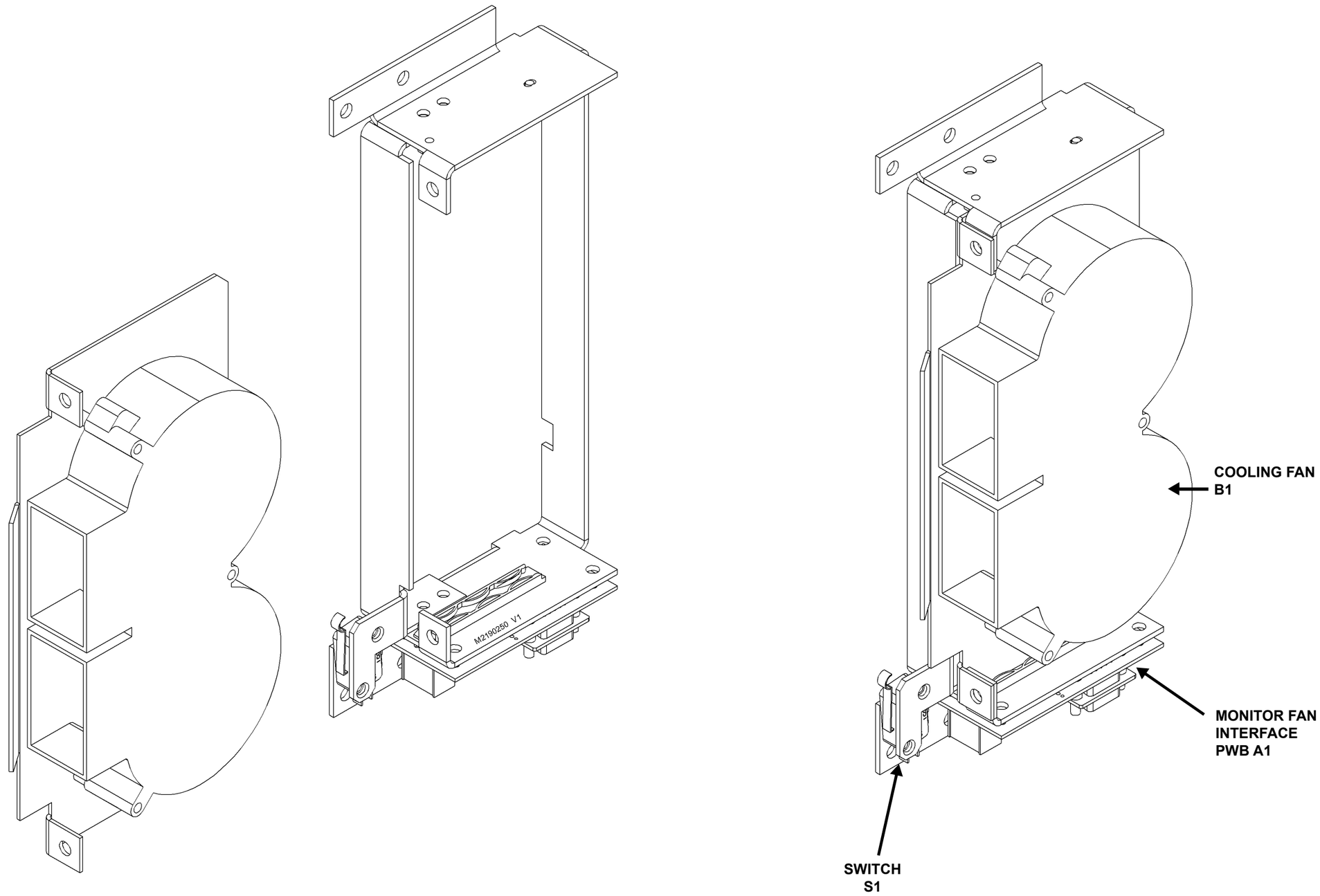

Figure MD-3: NAX273A Monitor Fan Assembly

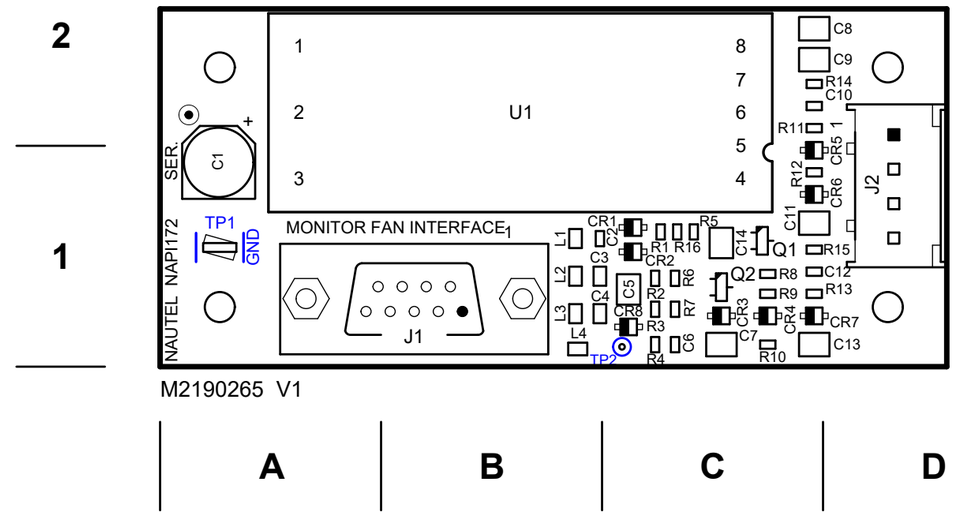

Figure MD-4: NAPI172A Monitor Fan Interface PWB

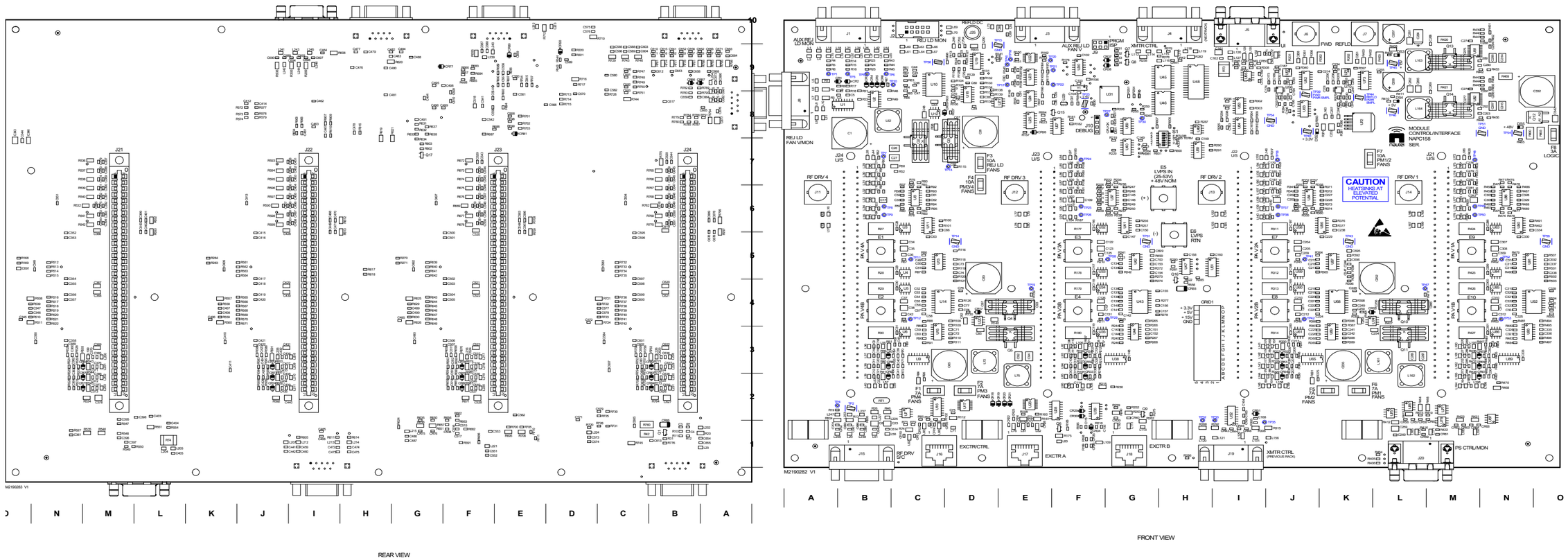

Figure MD-5: NAPC158B Module Control/Interface PWB

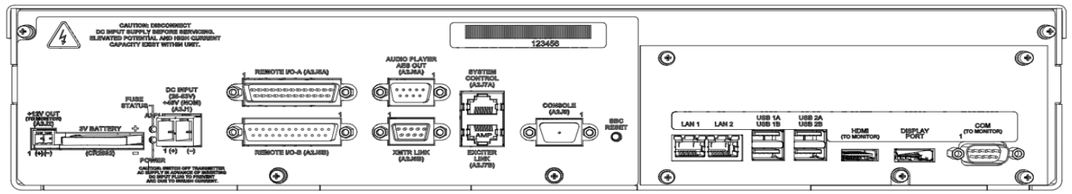

REAR VIEW

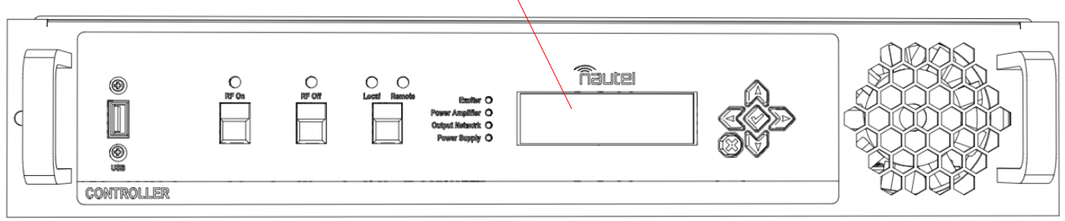

FRONT VIEW

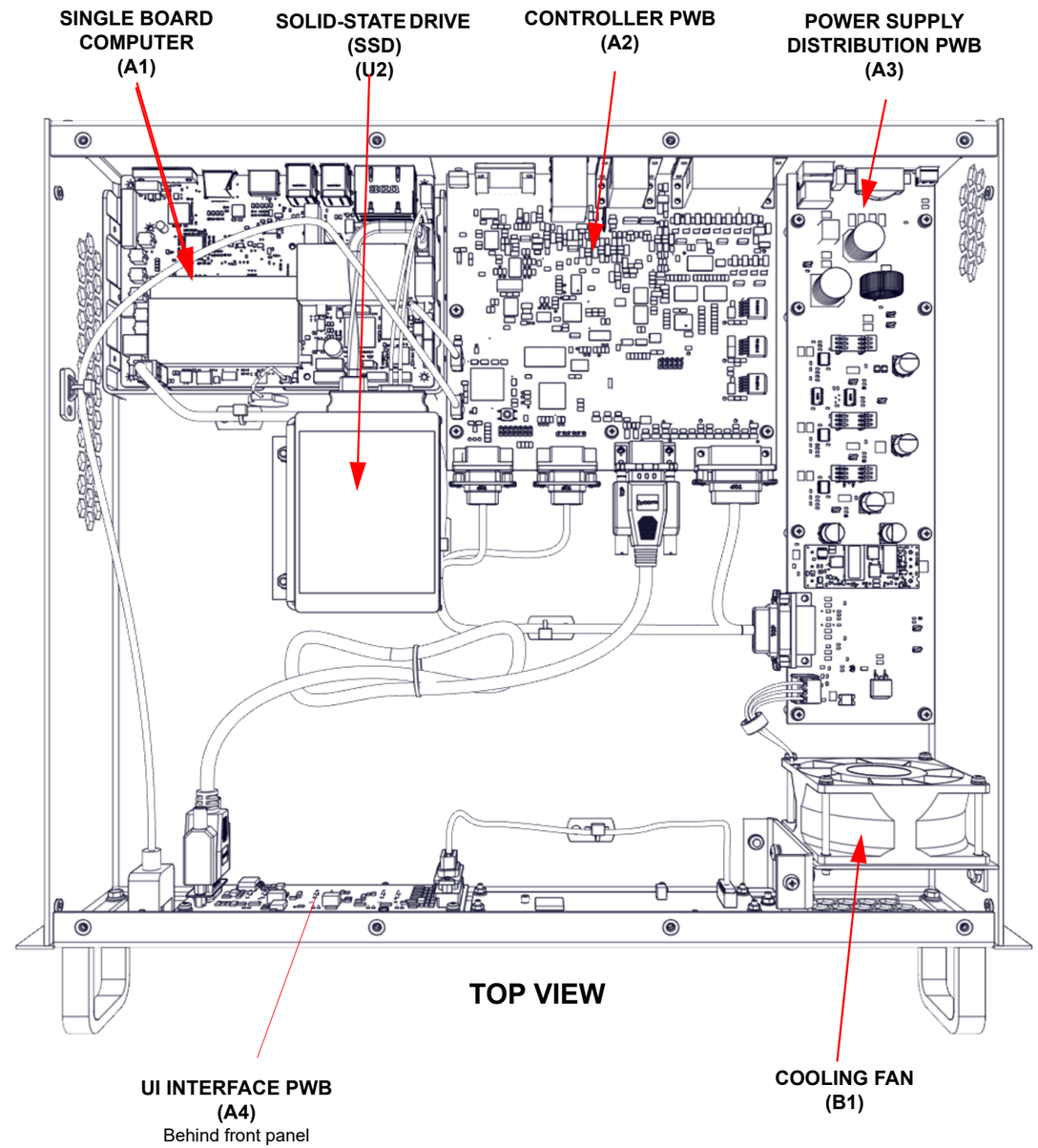

TOP VIEW

Figure MD-6: NAC124 Controller Module

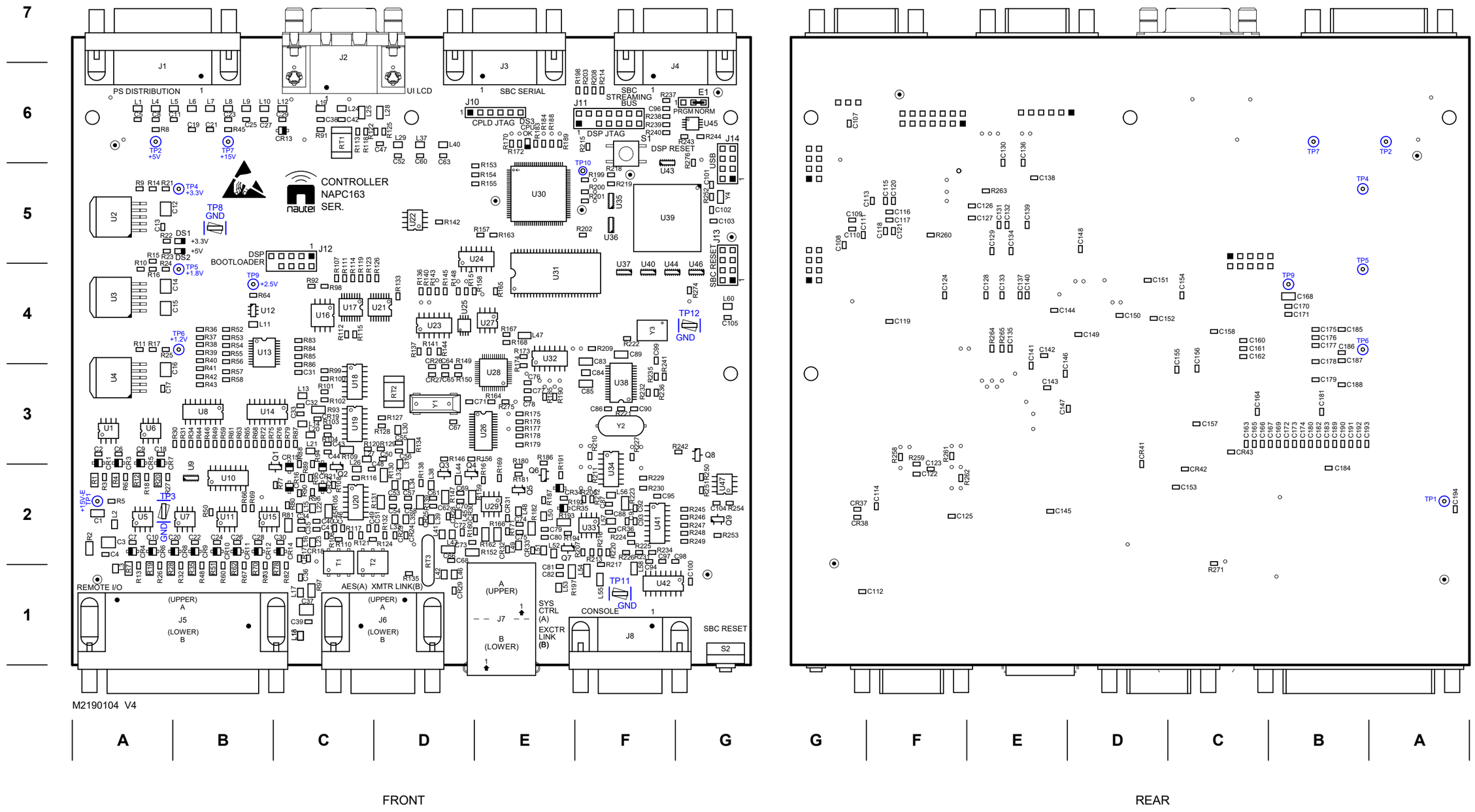

Figure MD-7: NAPC163 Controller PWB

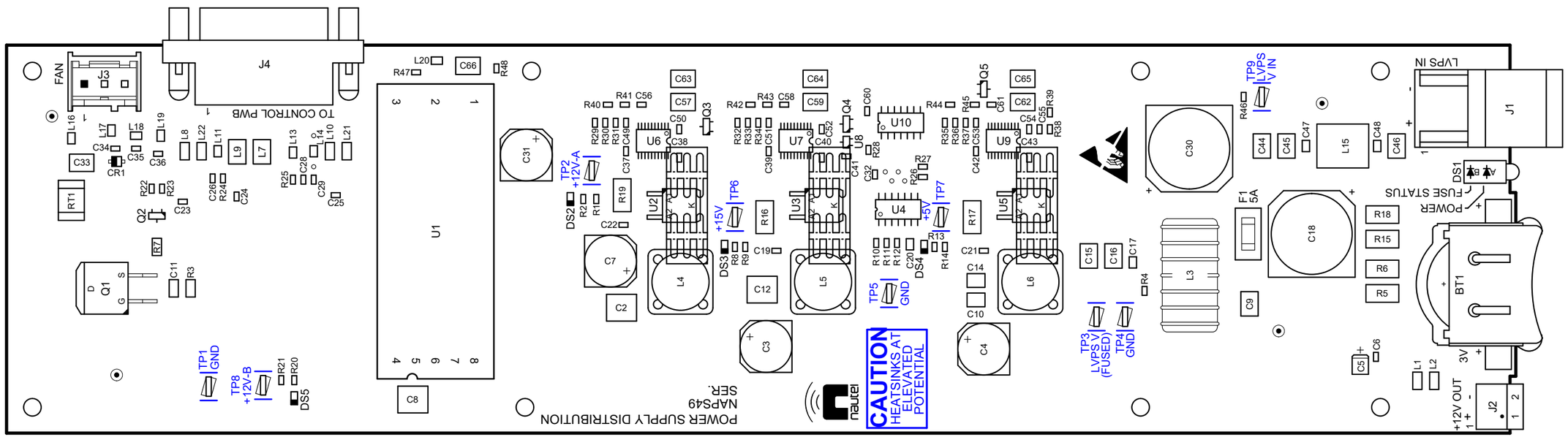

Figure MD-8: NAPS49B Power Supply Distribution PWB

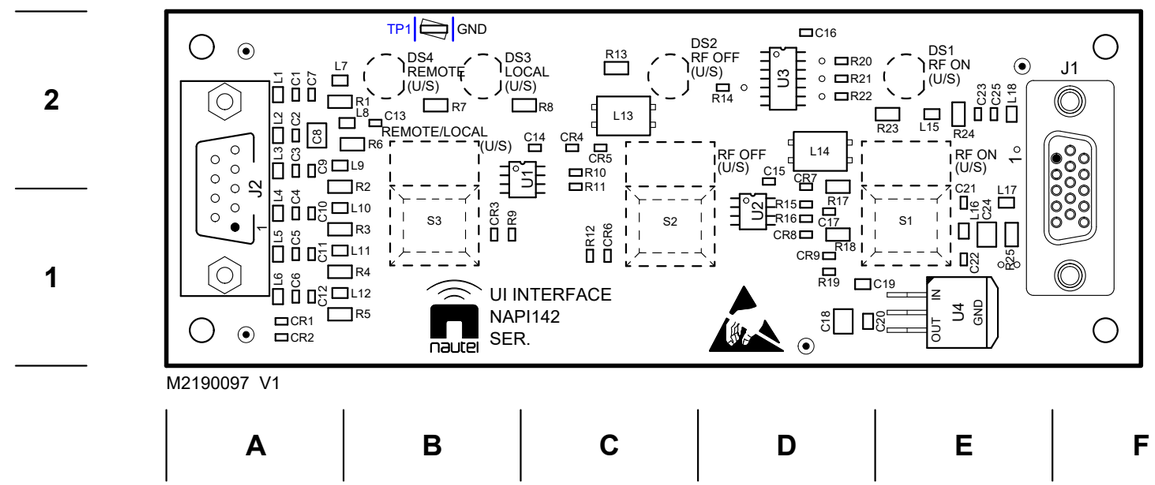

Figure MD-9: NAPI142A/01 UI Interface PWB

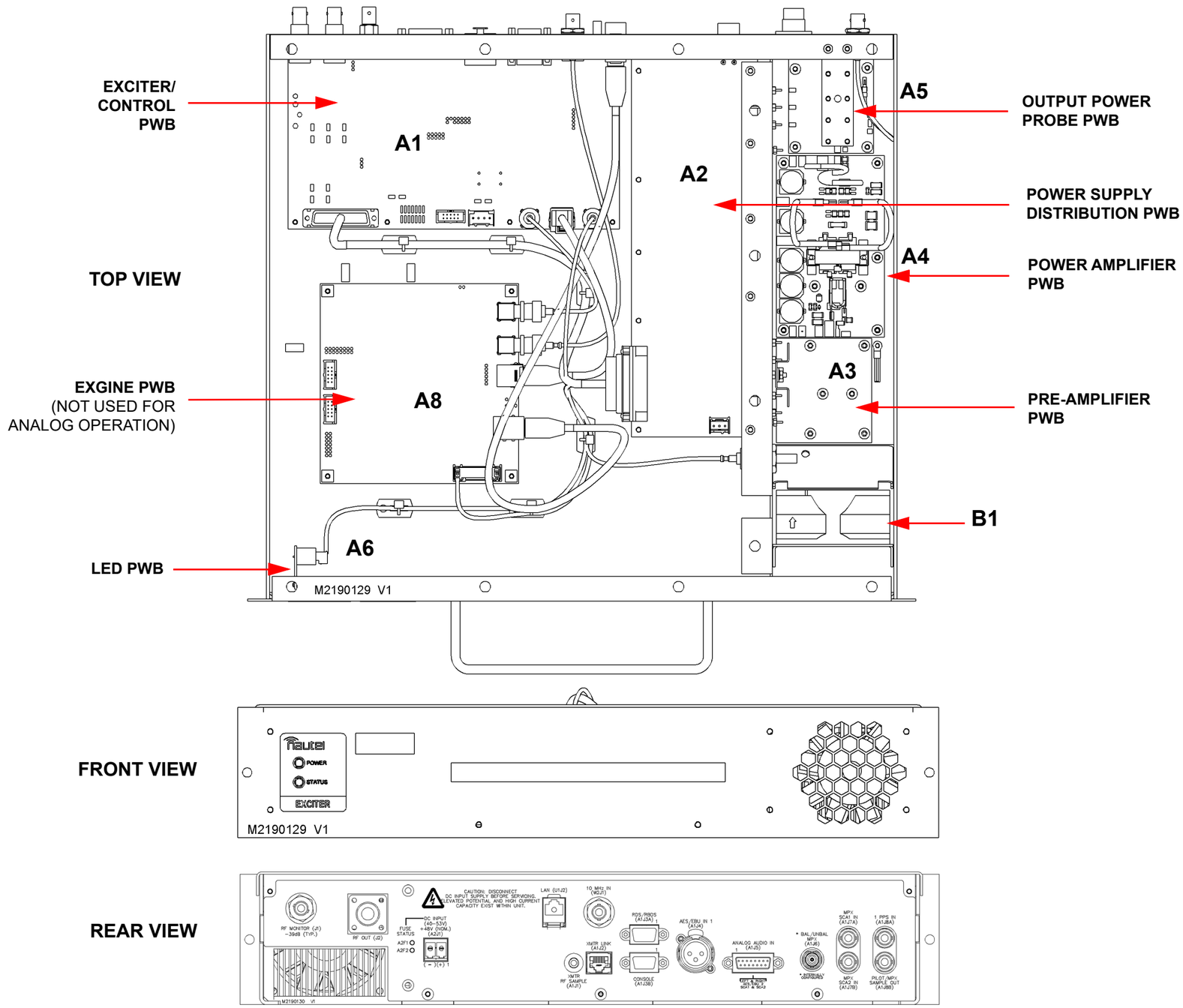

Figure MD-10: NAE107D and NAE107D/01 Exciter Assembly

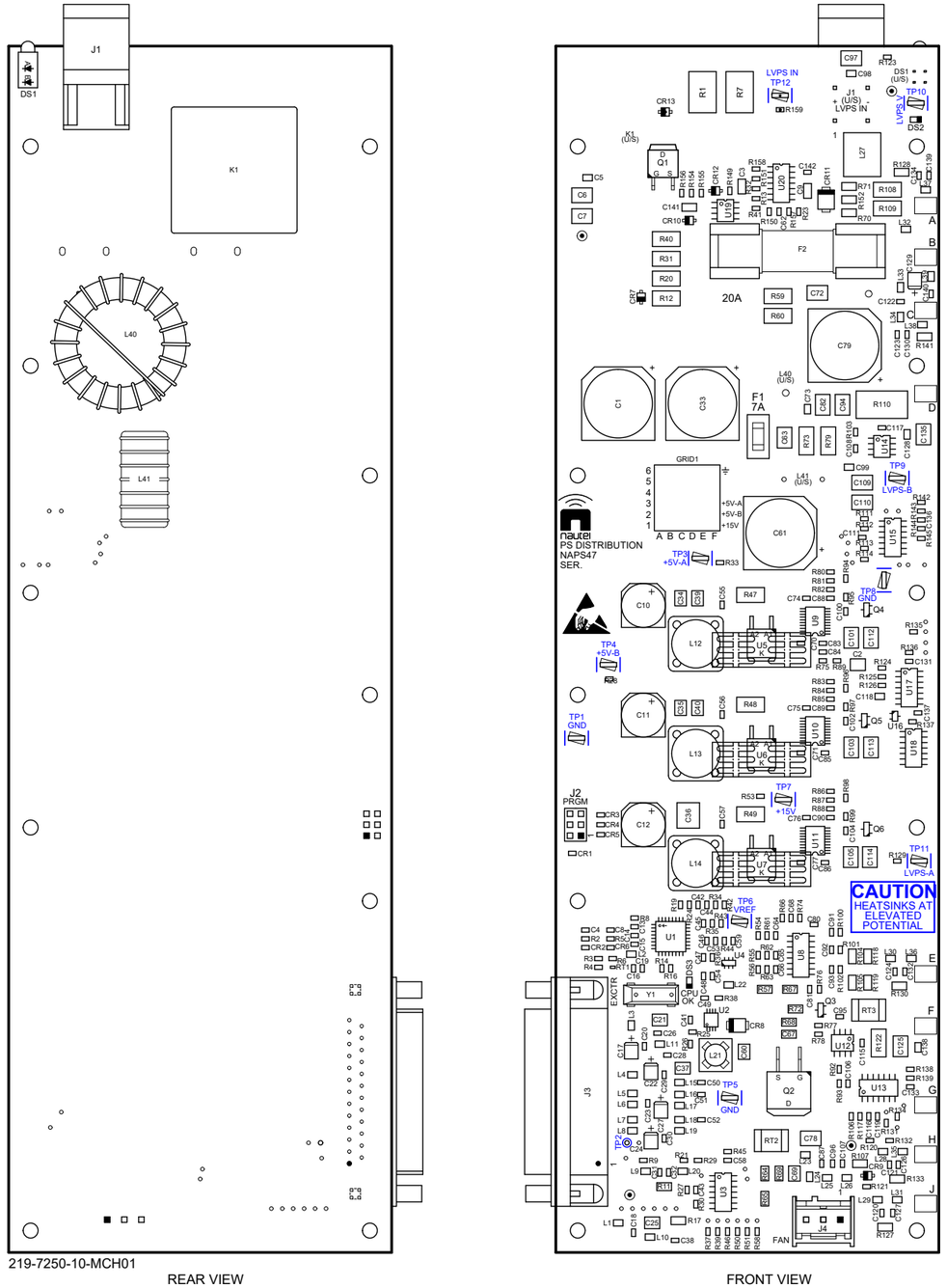

FRONT VIEW

Figure MD-11: NAPS47E/01 Power Supply Distribution PWB

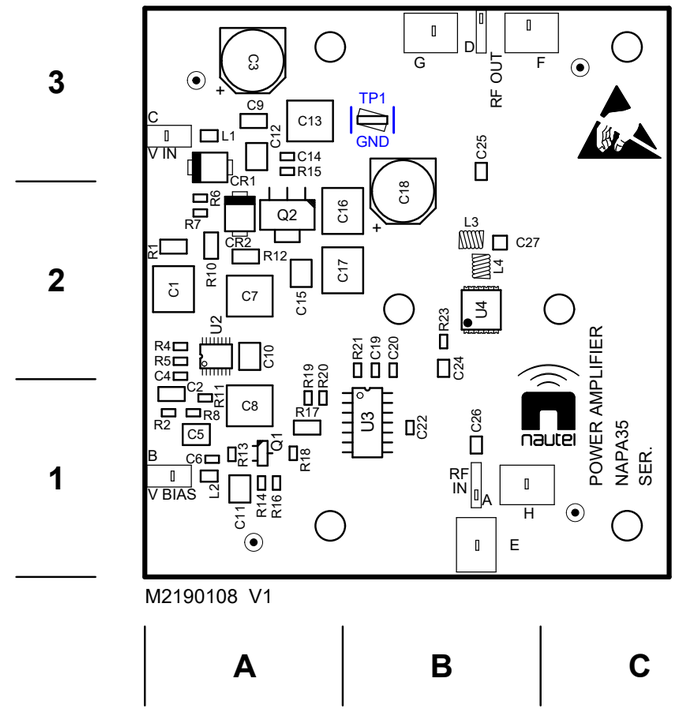

Figure MD-12: NAPA35 Pre-Amplifier PWB

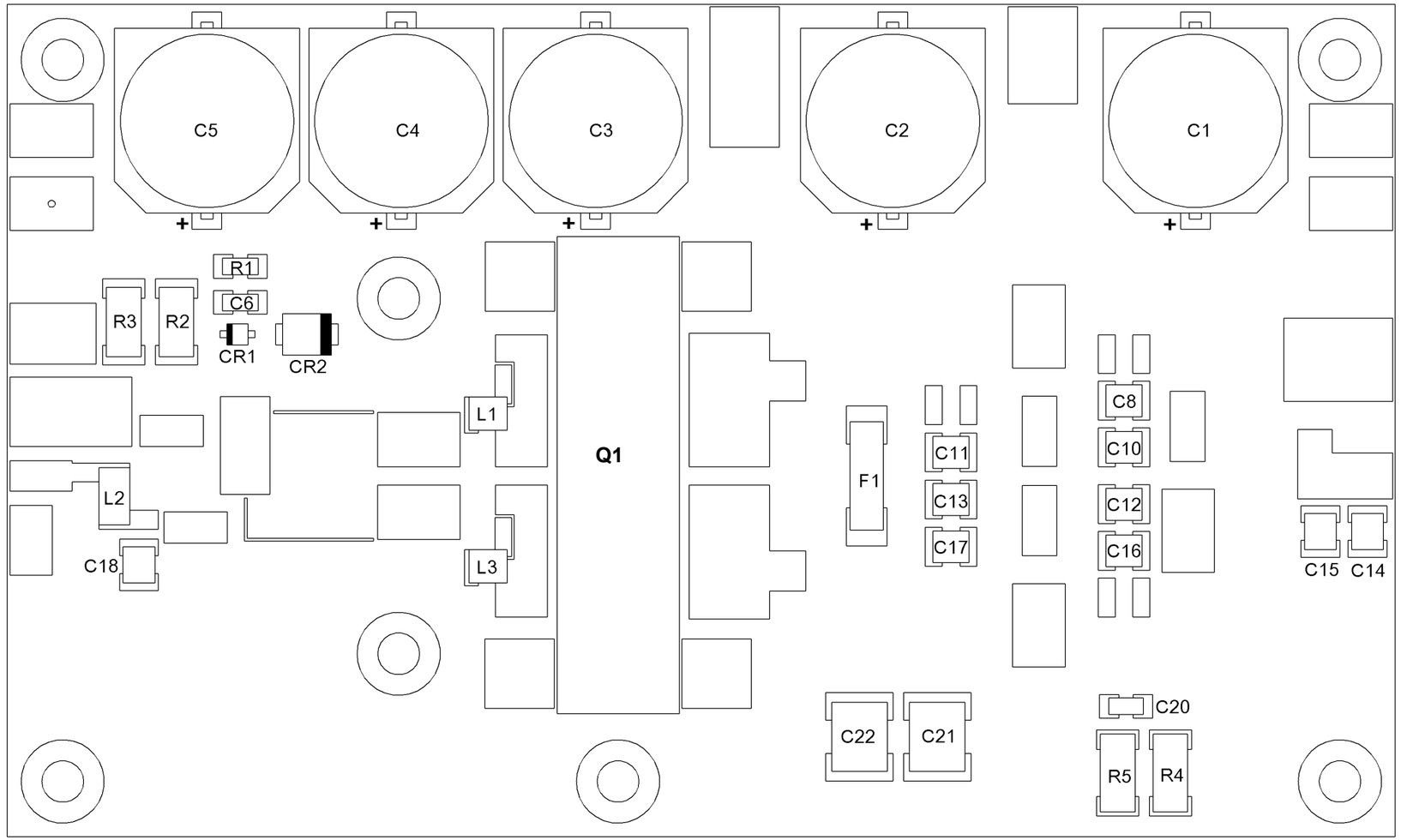

Figure MD-13: NAPA31C Power Amplifier PWB

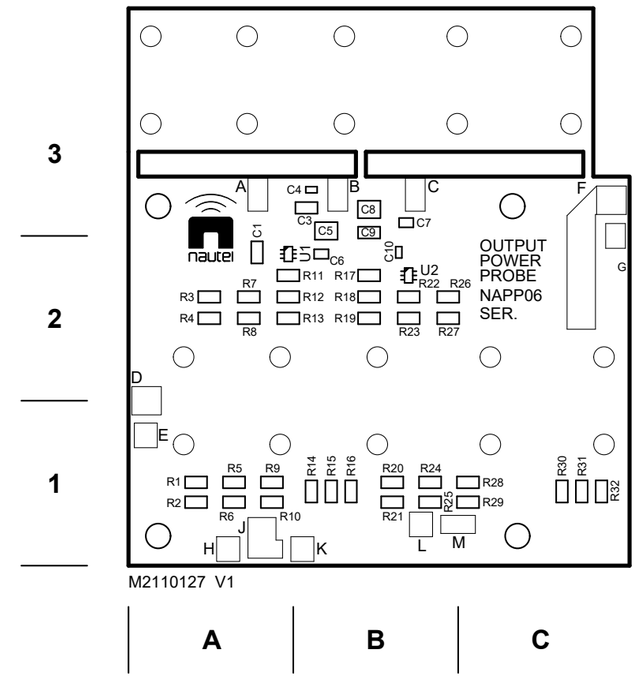

Figure MD-14: NAPP06/01 Output Power Probe PWB

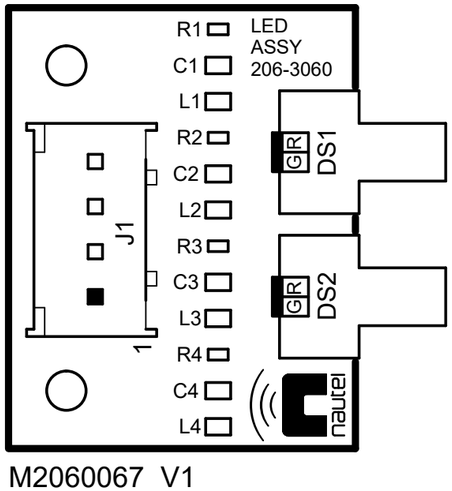

Figure MD-15: LED PWB (206-3060)

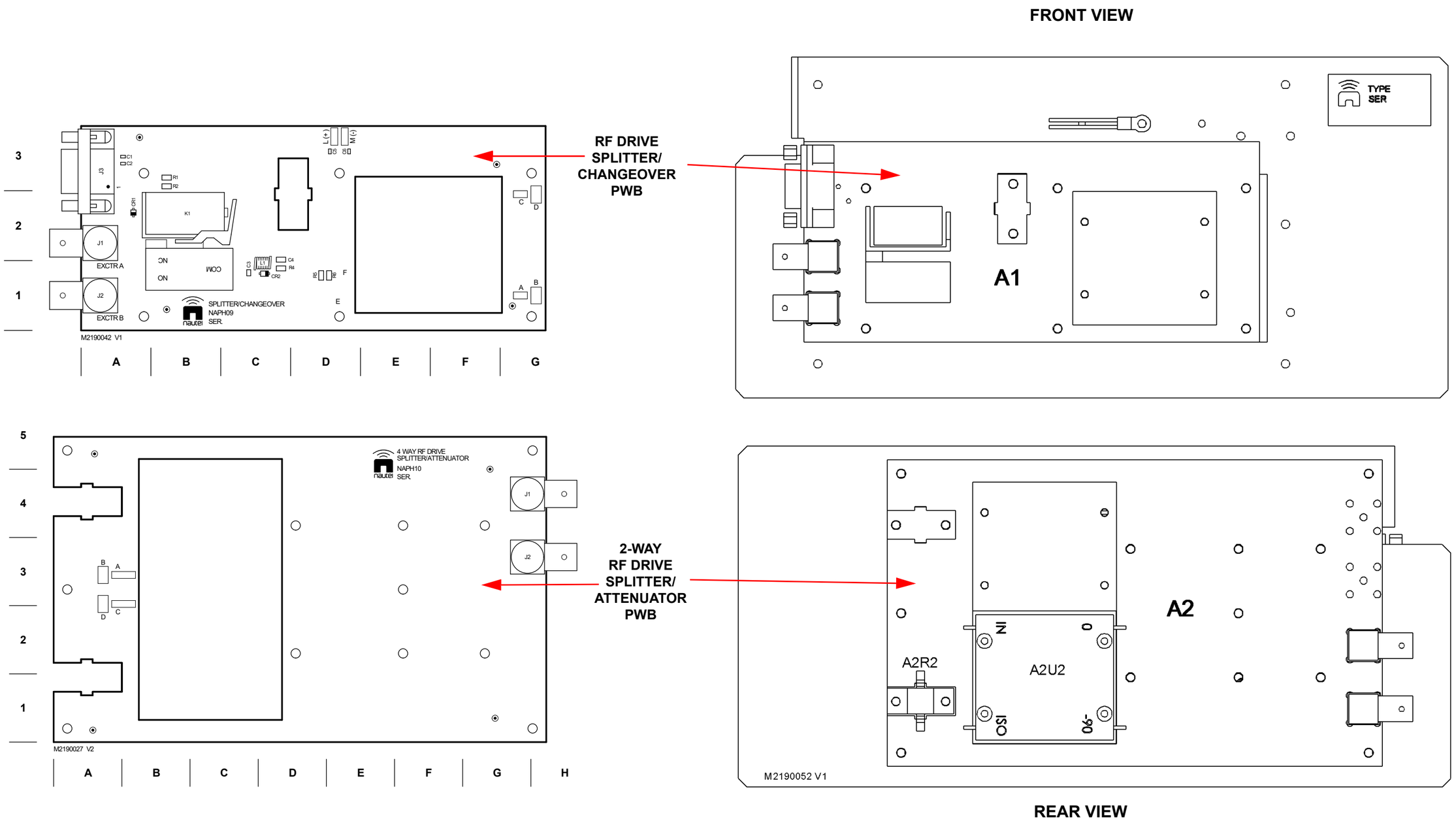

Figure MD-16: NAI22A/01 RF Drive Splitter/Changeover Assembly

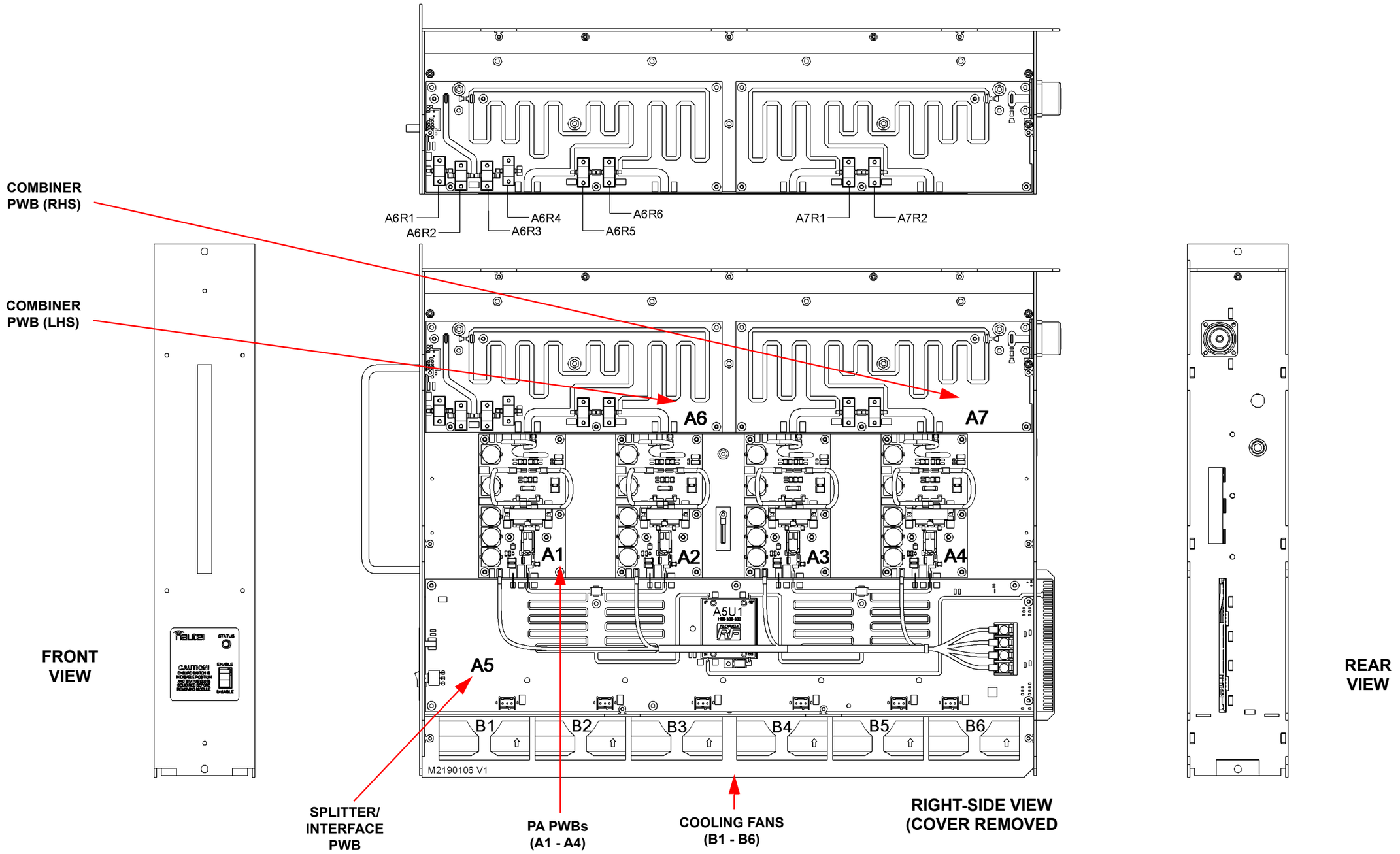

Figure MD-17: NAA61C RF Power Module

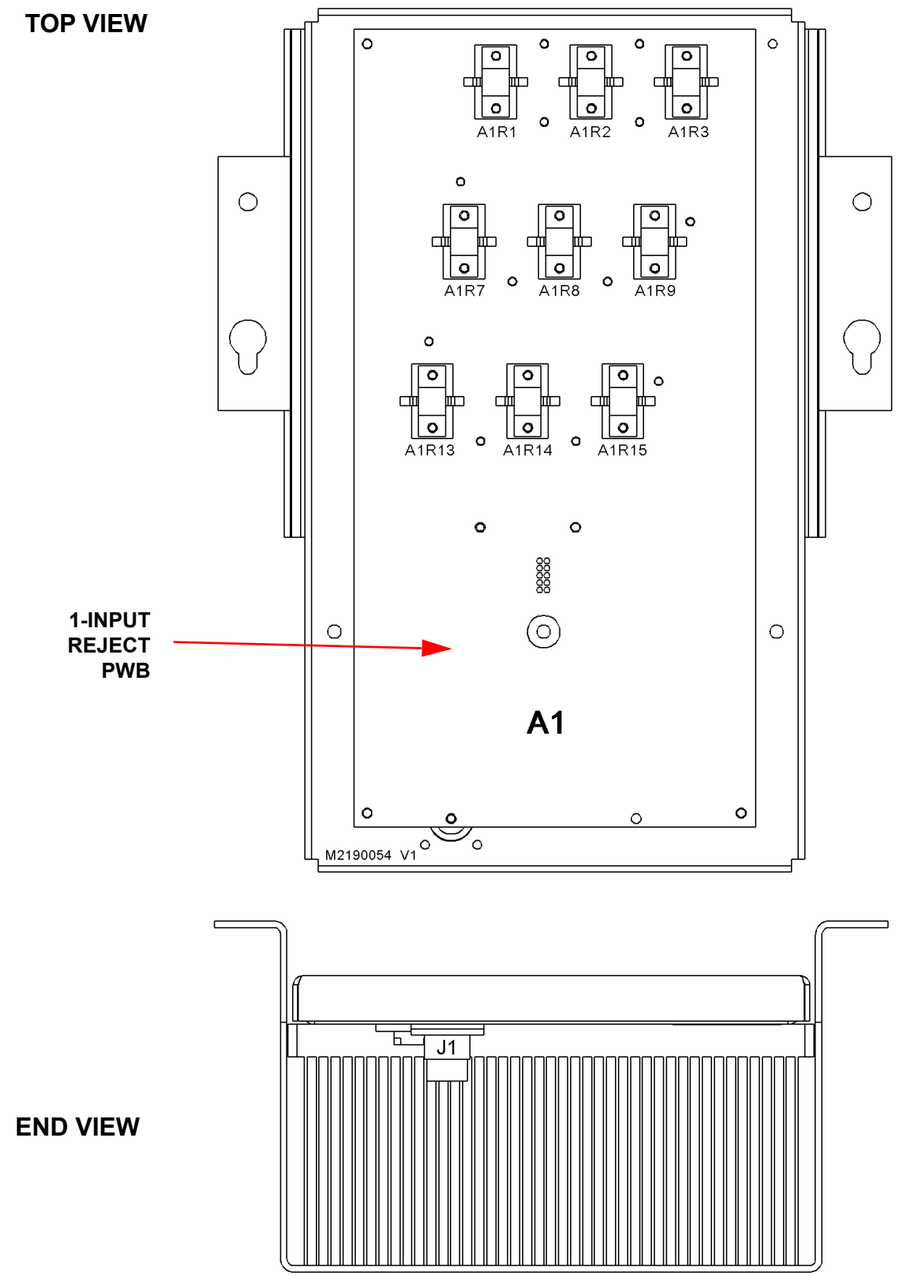

Figure MD-18: NAL14 1-Input Reject Load Assembly

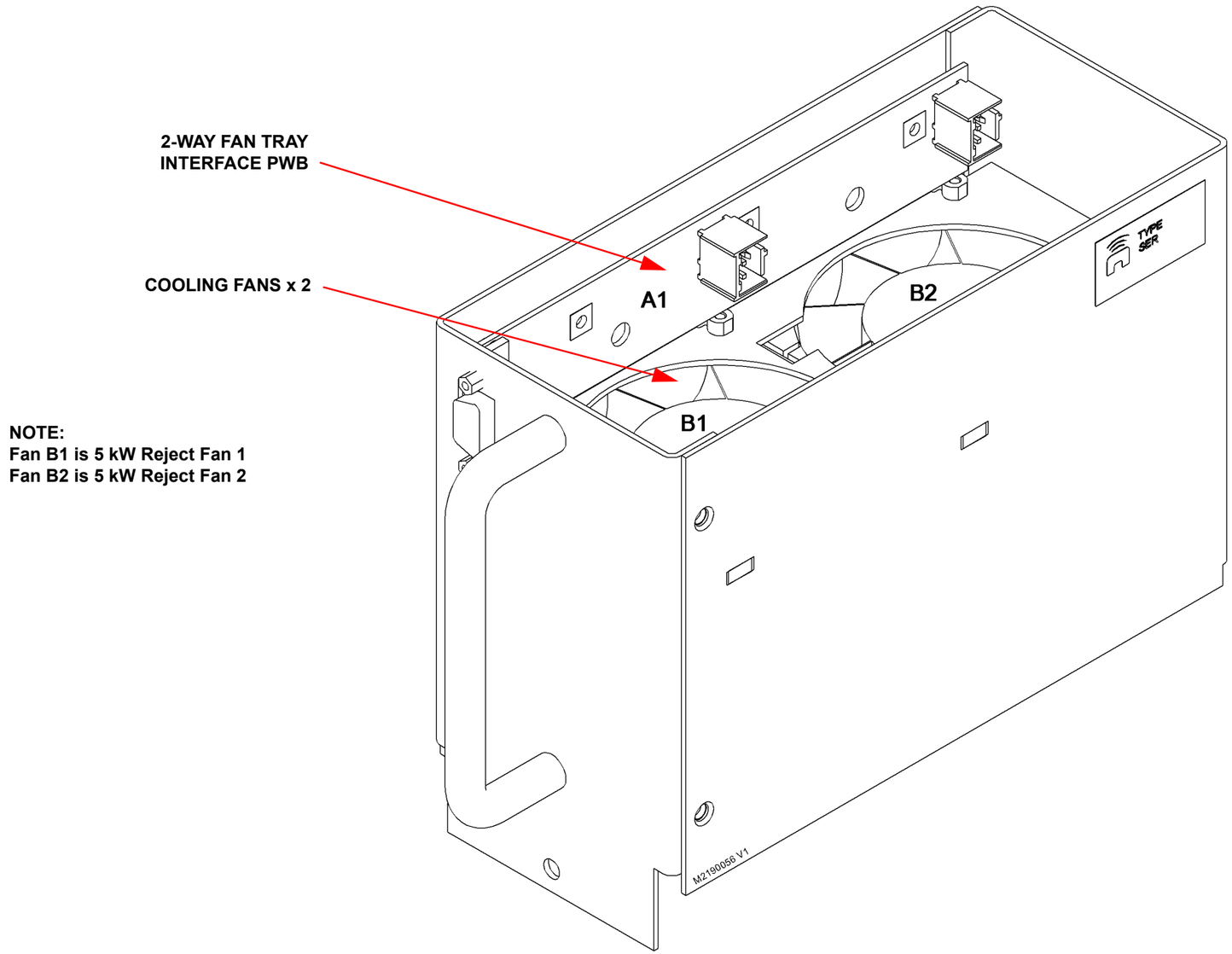

NOTE:
Fan B1 is 5 kW Reject Fan 1
Fan B2 is 5 kW Reject Fan 2

Figure MD-19: NAX264 2-Way Fan Tray Assembly

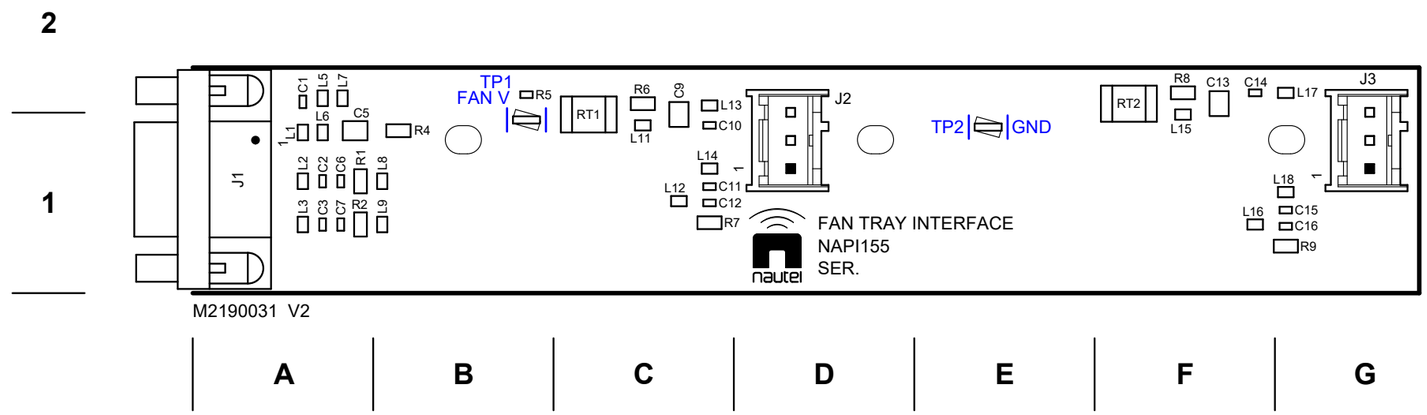

Figure MD-20: NAPI155 2-Way Fan Tray Interface PWB

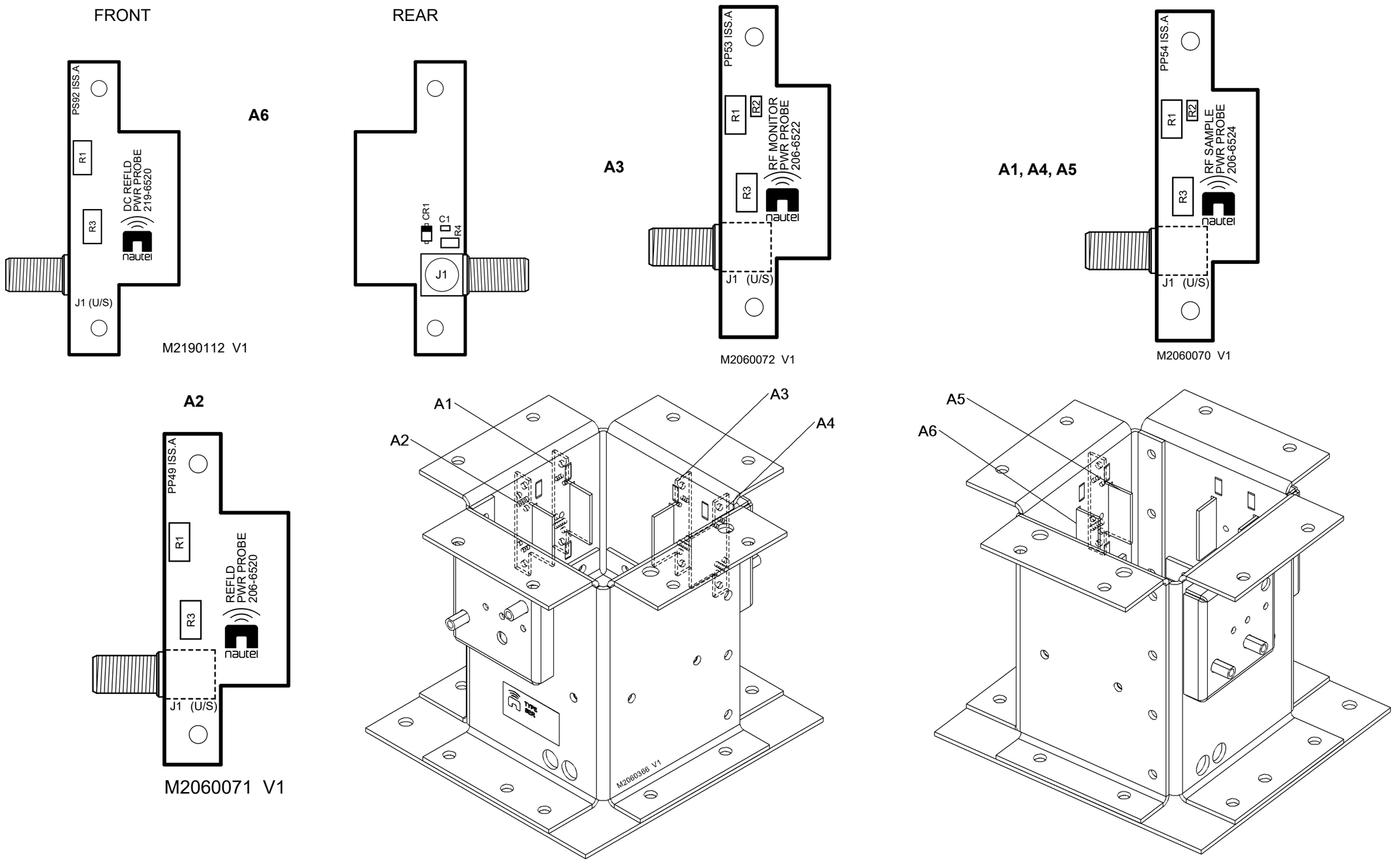

Figure MD-21: NAFP109B Output Power Probe

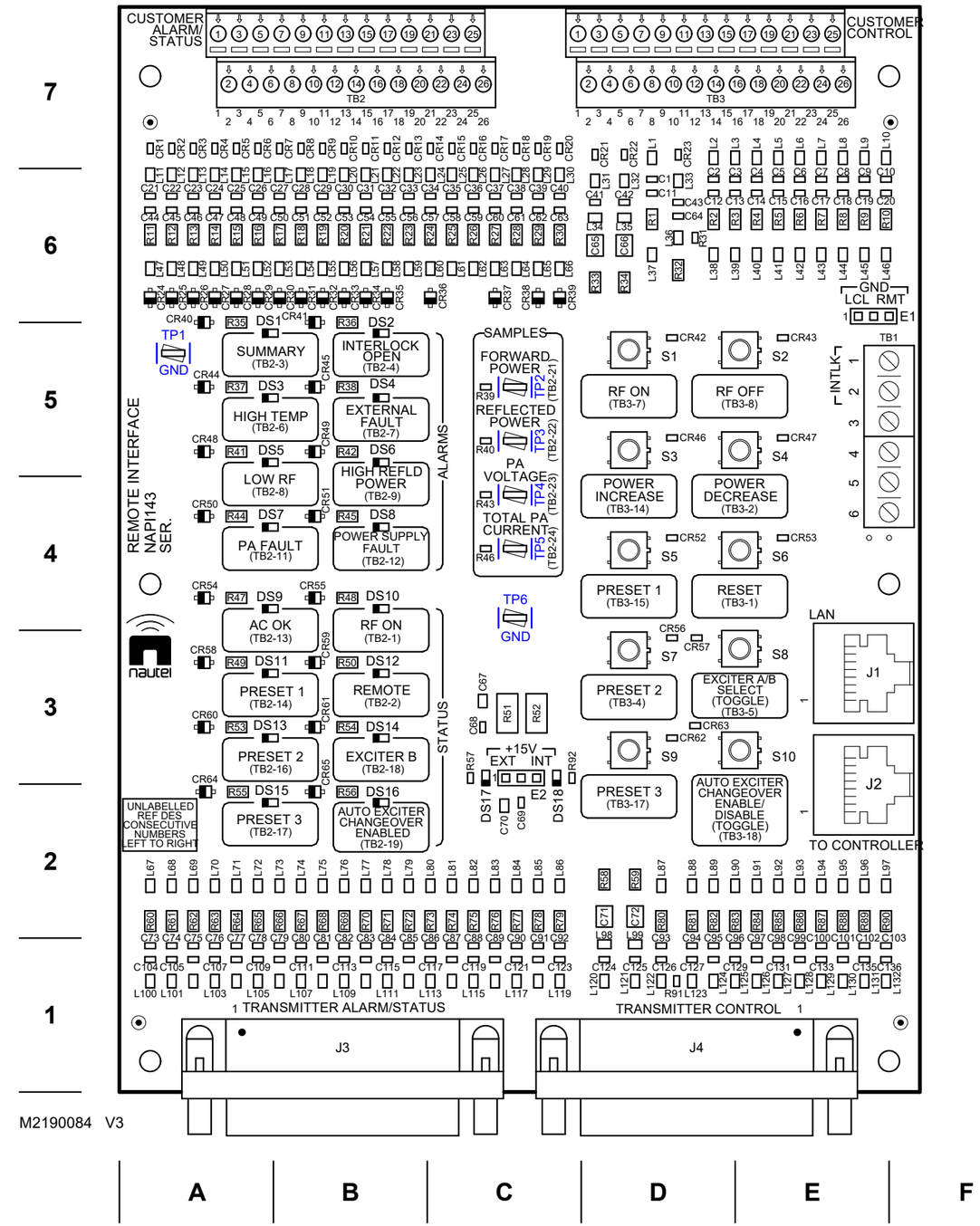

Figure MD-22: NAPI143/01 Remote Interface PWB

SECTION 4.6: LIST OF TERMS

This section defines some of the terms that are used in Nautel documentation.

AES/EBU. Audio Engineering Society/European Broadcasting Union (AES/EBU) is the name of a digital audio transfer standard. The AES/EBU digital interface is usually implemented using 3-pin XLR connectors (the same type connector used in professional micros). One cable carries both left-channel and right-channel audio data to the receiving device.

AUI. The Advanced User Interface is the local touch screen on the front door and the advanced remote control/monitoring feature that allows for extensive remote control and monitoring of the transmitter.

Cutback. A reduction in RF output power, caused by the occurrence of multiple shutbacks within a pre-defined period.

DHCP. Dynamic Host Carrier Protocol.

DSP. Digital Signal Processing.

EEPROM. Electrically Erasable Programmable Read-Only Memory.

Foldback. A reduction in RF output power, caused by adverse load conditions (high VSWR). No shutbacks or cutbacks have occurred.

LED. Light Emitting Diode (also referred to as lamp).

LVPS. Low Voltage Power Supply. A module or modules used in the ac-dc power stage that generates the low level dc supply voltage for the transmitter.

Preset. A setting that controls power level, frequency and audio parameters. The GV5/GV3.5 allows you to pre-program multiple presets.

PWB. Printed Wiring Board.

Shutback. A complete, but temporary loss of RF output power, caused by any one of a variety of faults, including high VSWR, high reject load power, RF drive failure, or an open external interlock.

Shutdown. A complete and permanent loss of RF output power. Typically follows repeated cutback, foldback or shutback events.

Surge protection panel. An electrical panel that protects equipment from electrical surges in the ac power supply, antenna or site ground caused by lightning strikes.

UI. The User Interface is the controller module's front panel LCD screen that allows for extensive local control and monitoring of the transmitter.

VSWR. Voltage standing wave ratio. This is an expression of the ratio of reverse voltage to forward voltage on the feedline and antenna system. An ideal VSWR of 1:1 provides maximum transmitter-antenna efficiency.

GV5/GV3.5 TROUBLESHOOTING MANUAL

Document: NHB-GV3.5-GV5-TRB

Issue: 2021-03-01

Nautel Limited
10089 Peggy's Cove Road
Hackett's Cove, NS Canada B3Z 3J4

Toll Free: +1.877.6NAUTEL (662.8835)
(Canada & USA only) or
Phone: +1.902.823.3900 or
Fax: +1.902.823.3183

Nautel Inc.
201 Target Industrial Circle
Bangor, Maine USA 04401

Phone: +1.207.947.8200
Fax: +1.207.947.3693

Customer Service (24-hour support)
+1.877.628.8353 (Canada & USA only)
+1.902.823.5100 (International)

Email: support@nautel.com
Web: www.nautel.com

© Copyright 2018 NAUTEL. All rights reserved.