NX50 Transmitter

Troubleshooting Manual

Document: NHB-NX50-TRB

Issue: 3.2 2016-02-08

Status: Standard

nautel

Nautel Limited
10089 Peggy's Cove Road
Hackett's Cove, NS Canada B3Z 3J4
Phone: +1.902.823.3900 or
Toll Free: +1.877.6NAUTEL (6628835) (Canada & USA only)
Fax: +1.902.823.3183

Nautel Inc.
201 Target Industrial Circle
Bangor, Maine USA 04401
Phone: +1.207.947.8200
Fax: +1.207.947.3693

Customer Service (24 hour support)
+1.877.628.8353 (Canada & USA only)
+1.902.823.5100 (International)

Email: support@nautel.com
Web: www.nautel.com

The comparisons and other information provided in this document have been prepared in good faith based on publicly available information. The reader is encouraged to consult the respective manufacturer's most recent published data for verification.

© Copyright 2016 NAUTEL. All rights reserved.

Contents

Release control record	vii
Responding to alarms	1-1
Corrective maintenance	1-1
Electrostatic protection	1-3
Identifying an alarm	1-4
Responding to alarms	1-20
Removing and reinstalling RF power modules	1-24
Troubleshooting RF power modules	1-27
Control/exciter panel board removal/replacement	1-33
PDM Drive Distribution PWB replacement	1-41
RF drive distribution PWB replacement	1-42
Rack Interface PWB replacement	1-43
SCR Rectifier Inspection/Replacement	1-45
Low Voltage Power Supply Replacement	1-47
RF Power Module Fan Tray replacement	1-48
Detailed Circuit Descriptions	2-1
Control/interface PWB (NAPC160B/01)	2-1
Digital AM exciter PWB (NAPE78A/01)	2-5
Remote interface PWB (NAPI106)	2-8
RF power module (NAP39A)	2-9
Parts Lists	3-1
Parts information	3-1
Family tree	3-1
How to locate information about a specific part	3-1
Column content	3-2

OEM code to manufacturer's cross-reference 3-3
Common abbreviations/acronyms 3-4

Wiring/connector lists 4-1
Wiring lists provided 4-1
Wiring lists not provided 4-1
Connector mating information 4-1
Wire colours 4-1
Printed wiring board patterns 4-1

Reading Electrical Schematics 5-1
Component values 5-1
Graphic symbols 5-1
Logic symbols 5-1
Reference designations 5-1
Unique symbols 5-2
Identifying schematic diagrams 5-2
Structure of schematics 5-2
Locating schematic diagram(s) for a functional block 5-3
Locating a part or assembly on a schematic 5-3

Mechanical Drawings 6-1
Identifying mechanical drawings 6-1
Content of mechanical drawings 6-1

List of terms 7-1

Release control record

Issue	Date	Reason
3.0	2012-11-01	Release 3 of product (NARA53B)
3.1	2015-10-30	Various changes to Section 1 for software release NX 4.5.
3.2	2016-02-08	Section 1 - Responding to Alarms: changed the description of several B+ related alarms; supports NX SW version 4.6.

Section 1: Responding to alarms

This section provides instructions you need when performing troubleshooting on the NX50 transmitter. This section includes the following topics:

- Corrective maintenance
- Electrostatic protection - see page 1-3
- Identifying an alarm - see page 1-4
- Responding to alarms - see page 1-20
- Troubleshooting RF power modules - see page 1-27
- Other Module Replacement Procedures - see page 1-19

If none of the procedures and alarms described in this section address your problem, contact Nautel for assistance.

Corrective maintenance

Corrective maintenance procedures consist of identifying and correcting defects or deficiencies that arise during transmitter operation. Local and/or remote alarm signals are generated when a malfunction occurs. If an alarm condition is caused by a malfunction in the RF power stage, the transmitter may maintain operation at a reduced RF output level. The nature of the fault – and station policy – will dictate whether an immediate maintenance response is necessary. Fault analysis and rectification may be conducted from three different levels, with a different technical competence level required for each: on-air troubleshooting, remote or local, and off-air troubleshooting.

CAUTION:
The transmitter contains many solid state devices that may be damaged if subjected to excessive heat or high voltage transients. Every effort must be taken to ensure that circuits are not overdriven or disconnected from their loads while turned on.

On-air troubleshooting

On-air troubleshooting can be performed from a remote location, or locally at the transmitter site.

Remote troubleshooting

Remote on-air troubleshooting consists of monitoring the transmitter's radiated signal using an on-air monitor, and observing the status of each remote fault alarm indicator. Information obtained from these sources should enable an operator to decide whether an alarm response may be deferred to a more convenient time, an immediate corrective action must be taken, or if a standby transmitter must be enabled (if one is available). It is recommended that the significance of remote indications, and the appropriate responses, be incorporated into a station's standard operating procedures. Refer to "Identifying an alarm" on page 1-4 to determine the remedial action required for a given fault.

Local troubleshooting

Local on-air troubleshooting consists of monitoring the transmitter's integral meters and fault alarm indicators. Analysis of this data will normally identify the type of fault, and in most cases will determine what corrective action must be taken. Refer to "Identifying an alarm" on page 1-4 to determine the remedial action required for a given fault.

The power amplifier stage contains an integral modular reserve (IMR) feature. This feature permits the transmitter to operate at a reduced RF output level when a malfunction occurs in one of its power modules. Station operating procedures will dictate whether a reduced RF output level is acceptable. When a reduced RF output level can be tolerated, replacement of the defective RF power module may be deferred to a convenient time.

A defective RF power module may be removed from the transmitter for servicing, while the transmitter is operating, provided that the conditions in the removal instructions detailed in "Removing an RF power module" on page 1-24 are met.

Off-air troubleshooting

Off-air troubleshooting must be performed when the replacement of a defective RF power amplifier module, or routine on-air calibration adjustments, will not restore operation.

It is recommended that the transmitter's output be connected to a precision 50 Ω resistive dummy load (rated for at least the maximum transmitter power rating) before starting off-air troubleshooting procedures. If an appropriate dummy load is not available, troubleshooting for a majority of faults can be performed with RF power stage turned off. The transmitter may remain connected to its antenna system for these procedures.

> *NOTE:*
> *Reduce the RF output level to a minimal value when troubleshooting faults in the power amplifier stage while the transmitter's RF output is connected to the antenna system.*

Electrostatic protection

The transmitter's assemblies contain semiconductor devices that are susceptible to damage from electrostatic discharge. The following precautions must be observed when handling an assembly which contains these devices.

CAUTION:
Electrostatic energy is produced when two insulating materials are rubbed together. A person wearing rubber-soled shoes, walking across a nylon carpet or a waxed floor, can generate an extremely large electrostatic charge. This effect is magnified during periods of low humidity. Semiconductor devices such as integrated circuits, field-effect transistors, thyristors and Schottky diodes may be damaged by this high voltage unless adequate precautions are taken.

Electrical discharging of personnel

Personnel should be electrically discharged by a suitable grounding system (e.g., anti-static mats, grounding straps) when removing an assembly from the transmitter, and while handling the assembly for maintenance procedures.

Handling/Storage

An assembly should be placed in an anti-static bag when it is not installed in a host transmitter, or when it is not undergoing maintenance. Electronic components should be stored in anti-static materials.

Tools/Test equipment

Testing and maintenance equipment – including soldering and unsoldering tools – should be suitable for contact with static sensitive semiconductor devices.

Stress current protection

Every precaution should be taken to ensure the static sensitive semiconductor devices are protected from unnecessary stress current. This is achieved by ensuring that *current is not flowing when an electrical connection is broken*, and that *voltages are not present on external control/monitoring circuits when they are connected*.

Identifying an alarm

The best way to identify an alarm is by viewing the front panel's **Transmitter Status** page (Figure 1.1). If an alarm exists, the **Status** button at the bottom of the AUI display will be red. Press or click the **Status** button to go to the **Transmitter Status** page.

Figure 1.1: Transmitter Status Page

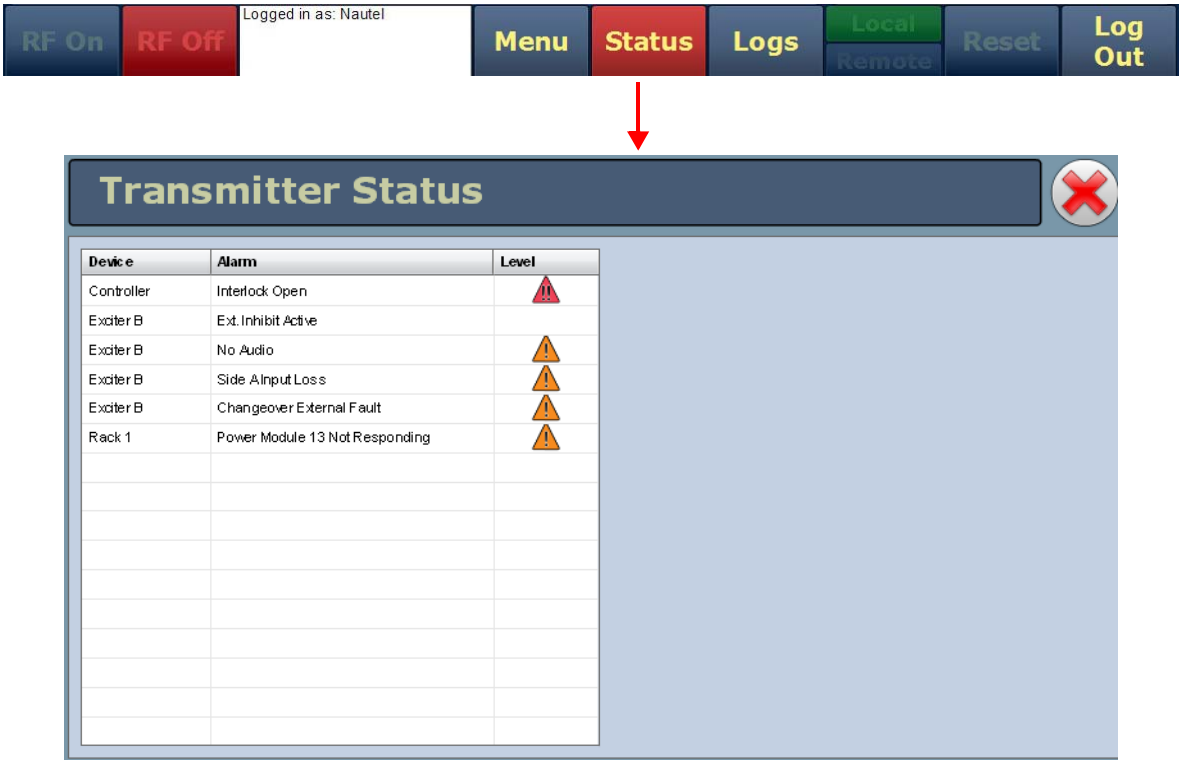

1. View the list of active faults by pressing the **Alarms** tab. Alarms are listed by their origin (**Device** column), then by name (**Alarm** column), and then by severity [a single yellow ! indicates low severity (RF output not affected), a single orange ! indicates medium severity (RF output is reduced), two red ! indicates high severity (RF output is inhibited); see **Level** column]. See "List of current alarms" on page 1-5.

2. Attempt to clear any latching alarms by pressing the **Reset** button on the bottom banner of the page. If the alarm persists, it will not be cleared from the display.

3. Refer to Table 1.1 on page 1-6 for troubleshooting tips on the offending alarm(s), which may also reference replacement and subsequent re-calibration procedures. Note the origin of the alarm (i.e., contained within Controller, Exciter, Rack # or Module # sub-system folders).

4. If the troubleshooting and subsequent replacement of a suspect PWB or RF power module does not remove the fault condition, contact Nautel.

> *NOTE:*
> *Before undertaking any troubleshooting, record all AUI meter readings and note if any other alarms are displayed on the* Transmitter Status *page. Record all alarms. The most convenient way to do this is by using a web browser over a LAN connection to save screen shots of critical status, meter and alarm pages. From the* Meters *page, press the information* (!) *button for each sub-device (Controller, Exciter and Module) to view (and save) detailed information.*

List of current alarms

If an alarm exists and is being recognized by the transmitter, it is displayed under the Alarms tab of the transmitter status page (see Figure 1.1 on page 1-4). The Device name indicates the sub-system origin of the alarm. The sub-systems that can be displayed are:

- Controller: All alarms in this sub-system apply to the controller.
- Exciter A: All alarms in this sub-system apply to exciter A.
- Exciter B: All alarms in this sub-system apply to exciter B.
- Rack #: All alarms in this sub-system apply to the associated rack (or cabinet).
- Module #: All alarms in this sub-system apply to the associated RF power module.

Table 1.1 on page 1-6 contains a column for most Alarms that can occur, sorted alphanumerically for each sub-system. The Description and Troubleshooting Action column provides a brief description of the alarm, troubleshooting tips and a cross-reference to more detailed troubleshooting, as applicable.

Table 1.1: Troubleshooting Alarms

Alarm (with Prefix)	Description and Troubleshooting Action
Controller: DRM Exciter Changeover	This event is caused by a fault related to the optional DRM exciter(s).
Controller: EEPROM Failure: Thresholds	This alarm occurs if there is no valid EEPROM threshold data to load. Remove and reapply the ac power to the transmitter. If the alarm persists after replacing the battery, replace the control/interface PWB (see "Control/interface PWB replacement" on page 1-39).
Controller: EEPROM Failure: Potentiometers	This alarm occurs if there is no valid EEPROM potentiometers data to load. Remove and reapply the ac power to the transmitter. If the alarm persists after replacing the battery, replace the control/interface PWB (see "Control/interface PWB replacement" on page 1-39).
Controller: EEPROM Failure: Schedule	This alarm occurs if there is no valid EEPROM schedule data to load. Remove and reapply the ac power to the transmitter. If the alarm persists after replacing the battery, replace the control/interface PWB (see "Control/interface PWB replacement" on page 1-39).
Controller: Exciter Changeover	This event is caused by a fault in the active exciter while the automatic changeover function is enabled. No further exciter changeovers can occur until the fault is cleared. Check for associated alarm(s) that may have caused the changeover and refer to their troubleshooting action.
Controller: External PDM Inhibit	This alarm occurs if the external PDM inhibit, wired to the control/interface PWB, is active. Transmitter power is reduced to 0 W. See "Controller: External PDM Inhibit" on page 1-20.
Controller: Firmware Checksum Failure	This alarm occurs if the Checksum for the firmware is in error. Remove and reapply the ac power to the transmitter. If the alarm persists after replacing the battery, replace the control/interface PWB (see "Control/interface PWB replacement" on page 1-39).

Alarm (with Prefix)	Description and Troubleshooting Action
Controller: Host Network Down	This alarm indicates the transmitter is configured to have networking enabled, but the host is indicating there is no network connectivity. If the transmitter is not connected to a network, the alarm can be inhibited by changing the network settings to static IP and setting the IP address to 0.0.0.0. If the transmitter is connected to a network, verify the network settings are configured properly, and the network cable is connected to the correct port on the transmitter.
Controller: Host Not Booted	This alarm indicates that the controller has not received any communication from the host since the last time the controller booted (i.e., was powered up). The occurrence of this alarm is normal for approximately one to five minutes while the host is booting, immediately after ac power has been applied to the transmitter. If this alarm continues to occur more than 30 minutes after ac power has been applied to the transmitter, cycle (turn off, then on) the ac power. If the alarm persists after 30 minutes, replace the SBC or control/interface PWB (see “Control/interface PWB replacement” on page 1-39).
Controller: Host Not Responding	This alarm indicates that the controller has not received any communication from the host in a set period of time. The occurrence of this alarm is normal for approximately one to five minutes while the host is booting, immediately after ac power has been applied to the transmitter. If this alarm continues to occur more than 30 minutes after ac power has been applied to the transmitter, cycle (turn off, then on) the ac power. If the alarm persists after 30 minutes, replace the SBC or control/interface PWB (see “Control/interface PWB replacement” on page 1-39).
Controller: Interlock Open	The external interlock input wired to the control/interface PWB is open. An alarm will be triggered by user-set conditions (e.g., the state of the door to the transmitter room). See “Controller: Interlock Open” on page 1-20.
Controller: Low Battery	This alarm occurs if the voltage of the backup battery has fallen below an acceptable level. Replace the battery (BT1) on the control/interface PWB while ac power is on. If the alarm persists after replacing the battery, replace the control/interface PWB (see “Control/interface PWB replacement” on page 1-39).

Alarm (with Prefix)	Description and Troubleshooting Action
Controller: Not Responding Exciter A	This alarm occurs if exciter A is not responding to serial messages. May cause an exciter changeover. Replace the digital AM exciter PWB of the exciter which is no longer responding (see "Digital AM exciter PWB replacement" on page 1-34).
Controller: Not Responding Exgine	This alarm occurs if the optional Exgine PWBis not responding to serial messages. Replace the Exgine PWB (see "Exgine PWB replacement" on page 1-40).
Controller: PDM Duty Cycle High	This alarm occurs if the duty cycle of the PDM drive on the active exciter is more than 10% above desired. Press RF Off, press the Reset button (S1) on the digital AM exciter PWB, then press RF On. If the alarm persists, replace the digital AM exciter PWB (see "Digital AM exciter PWB replacement" on page 1-34).
Controller: PDM Duty Cycle Low	This alarm occurs if the duty cycle of the PDM drive on the active exciter is more than 10% below desired. Press RF Off, press the Reset button (S1) on the digital AM exciter PWB, then press RF On. If the alarm persists, replace the digital AM exciter PWB (see "Digital AM exciter PWB replacement" on page 1-34).
Controller: PDM Latch	This alarm occurs if the duty cycle of the PDM drive on the active exciter is more than 95% steady state. Press RF Off, press the Reset button (S1) on the digital AM exciter PWB, then press RF On. If the alarm persists, replace the digital AM exciter PWB (see "Digital AM exciter PWB replacement" on page 1-34).
Controller: RF Drive High	This alarm occurs if the duty cycle of the RF drive on the active exciter is more than 60%. PDM is inhibited and an exciter changeover occurs, if enabled. If the alarm persists, change over to the standby exciter. If this clears the alarm, there is likely a fault with one of the control/interface PWB's high speed comparators. Replace the control/interface PWB (see "Control/interface PWB replacement" on page 1-39).
Controller: RF Drive Low	This alarm occurs if the duty cycle of the RF drive on the active exciter is less than 40%. PDM is inhibited and an exciter changeover occurs, if enabled. If the alarm persists, change over to the standby exciter. If this clears the alarm, there is likely a fault with one of the control/interface PWB's high speed comparators. Replace the control/interface PWB (see "Control/interface PWB replacement" on page 1-39).

Alarm (with Prefix)	Description and Troubleshooting Action
Controller: Synch Changeover	This event is caused by a fault reported by the active exciter related to the optional 1 PPS, 10 MHz or 1 kHz synchronization signals.
Controller: Unknown PDM Inhibit	This alarm occurs if a PDM inhibit signal is active. It may be caused by an external PDM inhibit, an open interlock circuit, or another shutback source. Transmitter power is reduced to 0 W. Check for associated alarm(s) that may have caused the PDM inhibit and refer to their troubleshooting action.
Exciter A/B: AM Input Loss	This alarm occurs if the input signal being used to generate the analog AM modulation is low or not present. This alarm will be triggered immediately if the AES input is unlocked, or after 2 minutes if the incoming modulation level is below 10%. The presence of this alarm will trigger an exciter changeover if automatic changeover is enabled and the transmitter is operating on the main exciter. Verify that the active preset is calling up the correct audio input and is set for the correct input level. Verify that there is a valid audio signal on the audio input being used. If the alarm persists, replace the associated digital AM exciter PWB (see “Digital AM exciter PWB replacement” on page 1-34).
Exciter A/B: Audio Overmod Protection	Due to a combination of audio and the current settings, too much power is being drawn from the transmitter. Decrease the audio input level until the alarm disappears.
Exciter A/B: B+ ADC Overflow	The B+ sample voltage is too high, causing clipping in the ADC. B+ compensation will be unreliable.
Exciter A/B: Cutback Active	The forward power has been reduced due to multiple shutbacks.

Alarm (with Prefix)	Description and Troubleshooting Action
Exciter A/B: Digital Input Loss	This alarm indicates the input signal being used to generate the digital modulation is too low or no longer present. This alarm will be triggered immediately if the AES input (DRM) is unlocked or the Exgine stream (IBOC) is missing, or if the DSP is receiving zeroes on the AES (DRM) or Exgine (IBOC) input for more than 100 ms. The presence of this alarm will trigger an exciter changeover, if automatic changeover is enabled and the transmitter is operating on the main exciter. Verify that the active preset is calling up the correct input and is set for the correct input level. Verify that there is a valid signal on the input being used. If the alarm persists, replace the associated digital AM exciter PWB (see "Digital AM exciter PWB replacement" on page 1-34).
Exciter A/B: External Inhibit Active	An externally generated PDM inhibit (via the control/interface PWB) is active. Transmitter power is reduced to 0 W.
Exciter A/B: FPGA Test Failed	There was a programming failure with the FPGA. Possibly indicates a fault with the control/interface PWB. Cycle the power (off, then on) to the affected exciter. If the alarm persists, replace the affected digital AM exciter PWB (see "Digital AM exciter PWB replacement" on page 1-34).
Exciter A/B: High B+ Voltage	This alarm indicates that the B+ voltage measured by the exciter exceeded the B+ setpoint by more than 20 V for at least ten (10) seconds. If the rack interface's High B+ voltage alarm is present, see the troubleshooting action for that alarm. If the rack interface's alarm is not present, compare the exciter's B+ voltage meter with the rack's B+ voltage meter. If they are different, calibrate the exciter's B+ voltage sample using a multimeter to measure the B+ voltage. If after calibrating the exciter's B+ voltage sample the meters continue to read the incorrect voltage, replace the associated digital AM exciter PWB (see "Digital AM exciter PWB replacement" on page 1-34).
Exciter A/B: High Current Foldback Active	The forward power has been reduced due to a high level of RMS RF current. Decrease the transmitter's power level until the alarm disappears and/or check the transmitter's output network.
Exciter A/B: High DC Current Foldback Active	The forward power has been reduced due to a high level of RMS dc current.

Alarm (with Prefix)	Description and Troubleshooting Action
Exciter A/B: High Fwd Foldback Active	The forward power has been reduced due to a high level of RMS forward power. Decrease the transmitter's power level unttil the alarm disappears and/or check the transmitter's output network.
Exciter A/B: High Temperature Foldback Active	The forward power has been reduced due to excessive temperature in the RF power modules or SCR rectifiers. Check the transmitter's output network and verify that the air filters in the back of each cabinet are clean. Verify the temperature of the transmitter building is within specifications.
Exciter A/B: Low B+ Voltage	This alarm occurs when the B+ voltage measured by the exciter drops below 75% of the B+ setpoint for more than 10 seconds. When this alarm is present the exciter will not allow the PDM duty cycle to be increased to compensate for fluctuations in B+. This alarm will clear when the B+ voltage measurement exceeds 81.25% of the B+ setpoint. Generally this alarm indicates that the B+ voltage cannot be increased because the ac voltage is too low. Check the ac mains voltage connected to the transmitter and verify the power transformer is tapped correctly.
Exciter A/B: Main PLL Unlocked	The main clock source has unlocked. Usually accompanied by No Ext 10 MHz. Cycle the power (off, then on) to the affected exciter. If the alarm persists, replace the affected digital AM exciter PWB (see "Digital AM exciter PWB replacement" on page 1-34).
Exciter A/B: Missed FPGA Watchdog	The DSP software failed to synchronize with the FPGA.
Exciter A/B: No AES1 or AES2 Lock	This alarm indicates there is no AES data detected on the applicable AES (1 or 2) input and that same input is selected as the active input in either Analog or Digital settings for the active preset. Verify there is valid AES data being applied to the corresponding input on the control/interface PWB. If there is data being applied to the correct input and the alarm persists, replace the digital AM exciter PWB (see "Digital AM exciter PWB replacement" on page 1-34) or the control/interface PWB (see "Control/interface PWB replacement" on page 1-39).
Exciter A/B: No B+ Sample	The B+ sample voltage is missing or is extremely low. If this alarm is accompanied by another alarm, troubleshoot the other alarm first. If the alarm occurs on its own, replace the affected digital AM exciter PWB (see "Digital AM exciter PWB replacement" on page 1-34).

Alarm (with Prefix)	Description and Troubleshooting Action
Exciter A/B: No Current Sample	The RF current sample voltage is missing or is extremely low. If the standby exciter does not indicate this alarm, replace the affected digital AM exciter PWB (see "Digital AM exciter PWB replacement" on page 1-34). If both exciters indicate this alarm, replace the affected digital AM exciter PWB (see "Control/ interface PWB replacement" on page 1-39).
Exciter A/B: No Digital AES Lock	No AES stream is detected on the digital AES input. Check the audio input.
Exciter A/B: No Ext 10 MHz	No 10 MHz is detected on the external 10 MHz input. Check the 10 MHz input.
Exciter A/B: No IBOC Data	This alarm indicates there is no modulation data being provided by the embedded Exgine when the transmitter is running in an IBOC mode of operation. This alarm will trigger the Digital Input Loss alarm. Verify the transmitter is operating in the intended mode. Verify the embedded Exgine is connected to the control/ interface PWB and the wiring connections are intact. Verify the Exporter is connected to the Exgine and the Exgine is receiving data from the Exporter. If the alarm persists, replace the associated digital AM exciter PWB (see "Digital AM exciter PWB replacement" on page 1-34) or the Exgine PWB (see "Exgine PWB replacement" on page 1-40).
Exciter A/B: No Voltage Sample	There is a fault with the transmitter's voltage probe. If the standby exciter does not indicate this alarm, replace the affected digital AM exciter PWB (see "Digital AM exciter PWB replacement" on page 1-34). If both exciters indicate this alarm, replace the affected digital AM exciter PWB (see "Control/interface PWB replacement" on page 1-39).
Exciter A/B: Over Current Shutback	The RF current is above its factory-set threshold. Check the output network.
Exciter A/B: Over Voltage Shutback	The RF voltage is above its factory-set threshold. Check the output network.
Exciter A/B: PDM Inhibited	An internally generated PDM inhibit (from the DSP) is active. Transmitter power is reduced to 0 W.
Exciter A/B: Power Below Setpoint	The power set point cannot be attained, due to a foldback, RF power module failure(s), or a load impedance mismatch.

Alarm (with Prefix)	Description and Troubleshooting Action
Exciter A/B: SWR Shutback	The reflected power is above its factory-set threshold - approximately 8 kW. Check the output network.
Exciter A/B: VSWR Foldback Active	The forward power has been reduced due to a high VSWR. Check the output network.
Module #: Bad RF Drive	The duty cycle of the RF drive or the dead time between RF drive phases is not as expected. See "Troubleshooting RF power modules" on page 1-27 to determine whether to replace the affected RF power module or to repair damaged parts.
Module #: Close RF Relay	Status that indicates the RF power module's shorting relay contact is closed.
Module #: Disable PDM	Status that indicates the PDM drive in the RF power module is disabled.
Module #: EEPROM Failure	There is no valid EEPROM data to load. See "Removing and reinstalling RF power modules" on page 1-24 to replace the affected RF power module.
Module #: External Disable Active	The PDM drive cable is unplugged. Reconnect or replace the PDM drive cable. If the problem persists, replace the affected RF power module (see "Removing and reinstalling RF power modules" on page 1-24). If the problem persists, replace the PDM drive distribution PWB (see "RF drive distribution PWB replacement" on page 1-42).
Module #: Fan Speed 1 (or 2) Low	The specified fan below the specified RF power module is rotating at a speed less than 3000 RPM. If multiple RF power modules (from the same column) report this alarm, replace the associated fan tray assembly (see "RF Power Module Fan Tray replacement" on page 1-48). If only one RF power module reports this alarm, replace the affected RF power module (see "Removing and reinstalling RF power modules" on page 1-24).
Module #: High B+ Voltage	This alarm indicates the RF power module's B+ meter has exceeded 450 V. If high B+ voltage alarms are present for other system components, see the troubleshooting action for those alarms. If the alarm persists, replace the RF power module (see "Removing and reinstalling RF power modules" on page 1-24).

Alarm (with Prefix)	Description and Troubleshooting Action
Module #: High DC Current	This alarm occurs if the dc current in the RF power module is above 20 A. See "Troubleshooting RF power modules" on page 1-27 to determine whether to replace the affected RF power module or to repair damaged parts.
Module #: High PA Volts	The PA voltage is at least 10% above the product of the B+ level and the PDM duty cycle (and the PDM duty cycle is at least 10%). See "Troubleshooting RF power modules" on page 1-27 to determine whether to replace the affected RF power module or to repair damaged parts.
Module #: High RF Drive	The duty cycle of the RF drive on the active exciter is more than 50%. PDM is inhibited. See "Troubleshooting RF power modules" on page 1-27 to determine whether to replace the affected RF power module or to repair damaged parts.
Module #: High Temperature	The temperature of the RF power module is more than 90°C (194°F). If this alarm is accompanied by another alarm, troubleshoot the other alarm first. If the alarm occurs on its own, see "Troubleshooting RF power modules" on page 1-27 to determine whether to replace the affected RF power module or to repair damaged parts.
Module #: Invalid Thermistor Sample	A sample of the heatsink temperature is monitored. An alarm occurs if the sample is below an acceptable level for monitoring. See "Troubleshooting RF power modules" on page 1-27 to determine whether to replace the affected RF power module or to repair damaged parts.
Module #: Low B+ Voltage	The B+ voltage is at least 10% below its expected level. Replace the fuse on the power module interface PWB for the affected RF power module (see "Module #: Low B+ voltage" on page 1-22). See "Troubleshooting RF power modules" on page 1-27 to determine whether to replace the affected RF power module or to repair damaged parts.
Module #: Low Voltage Supply Fault	The voltage of the +15 V or +5 V power supply is more than its specified limits.

Alarm (with Prefix)	Description and Troubleshooting Action
Module #: Low PA Volts	The PA voltage is at least 10% below the product of the B+ level and the PDM duty cycle (and the PDM duty cycle is at least 10%). See "Troubleshooting RF power modules" on page 1-27 to determine whether to replace the affected RF power module or to repair damaged parts.
Module #: Low RF Drive	The duty cycle of the RF drive on the active exciter is less than 35%. PDM is inhibited. See "Troubleshooting RF power modules" on page 1-27 to determine whether to replace the affected RF power module or to repair damaged parts.
Module #: No Serial Comms	There is no serial communication with the RF power module. See "Removing and reinstalling RF power modules" on page 1-24 to replace the affected RF power module.
Module #: Overmodulation	The average PDM duty cycle is more than 95%. If PDM is enabled, the High DC Current alarm will occur first.
Module #: PDM Enabled	Status that indicates the PDM drive in the RF power module is enabled.
Module #: Residual PA Volts	An unexpected level of PA voltage is detected when the modulator or PA of a specific RF power module is disabled. See "Troubleshooting RF power modules" on page 1-27 to determine whether to replace the affected RF power module or to repair damaged parts.
Module #: RF Drive Enabled	Status that indicates the RF drive in the RF power module is enabled.
Module #: RF Relay Open	Status that indicates the RF power module's shorting relay contact is open.
Module #: Serial RF OFF	Status that indicates the RF power module is in an RF off state.
Rack #: AC Phase Loss	The SCR rectifier assembly detects a phase loss on the ac input. Check the ac mains fuses for a phase loss. If the ac mains phases are OK, replace the SCR rectifier assembly (U1) (see "SCR Rectifier Inspection/Replacement" on page 1-45).
Rack #: EEPROM Failure	There is no valid EEPROM data to load. Remove and reapply the ac power to the transmitter. If the alarm persists, replace the rack interface PWB (see "Rack Interface PWB replacement" on page 1-43).

Alarm (with Prefix)	Description and Troubleshooting Action
Rack #: Firmware Checksum Failure	The Checksum for the firmware is in error. Remove and reapply the ac power to the transmitter. If the alarm persists, replace the rack interface PWB (see "Rack Interface PWB replacement" on page 1-43).
Rack #: High B+ Voltage	If the B+ voltage is more than 10 V above the B+ voltage set point, the rack interface will attempt to decrease the rectifier's output. If the rack interface reaches the bottom of its adjustment range and the B+ voltage remains 10 V or more above the B+ voltage setpoint for more than 15 seconds, this alarm will occur. The alarm will clear when the B+ voltage changes to within 10 V of the B+ voltage setpoint, or the B+ power supply is inhibited (by turning RF Off, for example). If the alarm persists while the transmitter is producing RF power, replace the rack interface PWB (see "Rack Interface PWB replacement" on page 1-43).
Rack #: Low AC	A sample of the power transformer's secondary voltage is monitored. An alarm occurs if the ac input voltage is more than 45% below nominal. See "Rack #: Low AC" on page 1-23.
Rack #: Low B+ Shutdown	This alarm indicates that the B+ decreases more than 126 V below the B+ setpoint. While this alarm is active, the rectifier and exciter PDM outputs will be inhibited. This alarm will clear if the measured ac voltage on the transformer secondary increases above 263 Vac line-to-line after a minimum one (1) second delay or if the transmitter is turned RF Off. If the alarm persists, check the ac mains voltage and verify they are within the nominal voltage the transmitter is tapped for ±10%. Verify the mains transformer is tapped correctly. With RF On at low power, verify the B+ voltage is 400 V (or per the B+ setpoint if adjusted). If not, replace the rectifier. Otherwise suspect the rack interface PWB (see "Rack Interface PWB replacement" on page 1-43).

Alarm (with Prefix)	Description and Troubleshooting Action
Rack #: Low B+ Voltage	If the B+ voltage falls to more than 15% below the B+ voltage set point, the rack interface will attempt to turn up the rectifier output voltage. If the rack interface reaches the top of its adjustment range and the B+ voltage remains 25% or more below the B+ voltage setpoint for more than two (2) seconds, this alarm will occur. The alarm will clear when the B+ voltage changes to within 25% of the B+ voltage setpoint, or the B+ power supply is inhibited (by turning RF Off, for example). If the alarm persists while the transmitter is producing RF power, check the ac mains voltages and verify they are within ±10% of the nominal voltage for which the transformer is tapped. If the alarm persists, replace the rack interface PWB (see "Rack Interface PWB replacement" on page 1-43).
Rack #: Not Responding Module #	This alarm occurs if one or more of the 20 RF power modules is not responding to serial messages. Try swapping the affected module with a module in another location (see "Removing and reinstalling RF power modules" on page 1-24). If the alarm follows the module, replace the module. If the alarm follows the location, check the connections between the module location and its associated power module interface PWB and rack interface PWB.
Rack #: Rectifier Fan 1 (or 2) Fail	This alarm occurs if the speed of one of the SCR rectifier's cooling fans is below 1650 RPM (half its nominal value of 3300 RPM). Inspect the affected fan and, if necessary, replace it (see "SCR Rectifier Inspection/Replacement" on page 1-45).
Rack #: +15 V Fail	This alarm occurs if either +15 V power supply's rail is outside the acceptable range (13.5 V to 16.5 V). Replace the affected 15 V power supply (see "Low Voltage Power Supply Replacement" on page 1-47).
Rack #: +15 V PS A (or B) Fault	The digital fault reporting output of either +15 V power supply (U3 or U4) is active. Replace the affected 15 V power supply (see "Low Voltage Power Supply Replacement" on page 1-47).
Rack #: -15 V PS (A or B) Fault	This alarm occurs if the -15 V rail is outside its acceptable range of -13.5 to -16.5 V. Suspect a faulty dc-dc converter (U22 for A or U25 for B) on the rack interface PWB. Remove the rack interface PWB (see "Rack Interface PWB replacement" on page 1-43) and replace the defective dc-dc converter or the entire rack interface PWB.

Alarm (with Prefix)	Description and Troubleshooting Action
Rack #: +30 V PS Fault	This alarm occurs if the +30 V rail has varied outside its acceptable range of 27 to 33 V. Suspect a faulty dc-dc converter (U11 for A or U14 for B) on the rack interface PWB. Remove the rack interface PWB (see "Rack Interface PWB replacement" on page 1-43) and replace the defective dc-dc converter or the entire rack interface PWB.
Rack #: +48 V Fail	This alarm occurs if either +48 V power supply's rail is outside the acceptable range (44 V to 52 V). Replace the affected 15 V power supply (see "Low Voltage Power Supply Replacement" on page 1-47).
Rack #: +48 V PS A (or B) Fault	The +48 V power supplies (U5 and U6) are monitored. An alarm occurs if the power supply voltage varies outside its acceptable range of 44 to 52 V. Replace the affected 48 V power supply (see "Low Voltage Power Supply Replacement" on page 1-47).
Rack #: +5 V PS (A or B) Fault	This alarm occurs if the +5 V rail is outside its acceptable range of 4.8 to 5.6 V. Suspect a faulty dc-dc converter (U2 for A or U4 for B) on the rack interface PWB. Remove the rack interface PWB (see "Rack Interface PWB replacement" on page 1-43) and replace the defective dc-dc converter or the entire rack interface PWB.

Table 1.2: Module Replacement Procedures

Module	Replacement Procedure
RF Power Module	See page 1-24
Power Amplifier MOSFET	See page 1-30
Modulator MOSFET	See page 1-32
Remote Interface PWB	See page 1-34
Digital AM Exciter PWB	See page 1-34
Control/Interface PWB	See page 1-39
GPS Sync PWB	See page 1-40
Exgine PWB	See page 1-40
PDM Distribution PWB	See page 1-41
RF Drive Distribution PWB	See page 1-42
Rack Interface PWB	See page 1-43
Low Voltage Power Supplies	See page 1-47
RF Power Module Fan Tray	See page 1-48

Responding to alarms

Controller: External PDM Inhibit

The external PDM inhibit is wired to the control/interface PWB.

A **Controller: External PDM Inhibit** alarm indicates that an external PDM inhibit command is present. The alarm could be caused by an short circuit in the external wiring path to the control/interface PWB or a fault in the switching circuitry on the control/interface PWB. Troubleshoot as follows:

1. If the control/interface PWB's shorting jumper E2 is in the **INT** position (shorting pins 2 and 3), verify the dc voltage between J6-4 and ground on the control/interface PWB is approximately 15 V. This signifies there is no external PDM inhibit command.

2. If the control/interface PWB's shorting jumper E2 is in the **EXT** position (shorting pins 1 and 2), verify the dc voltage between J6-3 and J6-4 on the control/interface PWB is 0 V. This signifies there is no external PDM inhibit command.

3. If the conditions in Step 1 and Step 2 are met, suspect the control/interface PWB and if necessary, replace it (see "Control/interface PWB replacement" on page 1-39).

Controller: Interlock Open

A **Controller: Interlock Open** alarm indicates an external interlock is open. The transmitter's RF output will be inhibited.

The external interlock input is wired to the control/interface PWB by the end user and triggered by the conditions that they set (e.g., the state of the door to the transmitter room).

1. Gain access to the control/exciter panel (A11) (see Figure 1.6 on page 1-33) by opening the control cabinet's front door. The door is not latched and just swings open to the left.

2. Connect a digital multimeter (set to measure dc) between J6-2 of the control/interface PWB and ground.

3. If 15 V is present on J6-2, the external interlock circuit is intact and the probable cause of the alarm is a defective monitoring circuit. Suspect the control/interface PWB and if necessary, replace it (see "Control/interface PWB replacement" on page 1-39).

4. If 15 V is not present on J6-2, measure the voltage between J6-5 (external 15 V) of the control/interface PWB and ground, then between J6-1 (+15 V) and ground.

5. If 15 V is present on J6-5 and J6-1, the external interlock circuit is open (normally caused by an open interlock switch).

Module faults

There are many alarms on the AUI, prefixed by the text **Module**, that indicate faults related to one or more of the 20 RF power modules in a cabinet. The number that appears after Module or PM, identifies the serial identification of the affected RF power module. These serial numbers are labeled on the front panel of each RF power module.

1. Check the forward power reading on the AUI. If it is less than the preset level, one or more RF power modules are defective. Proceed to "RF power module fault validation".

2. If the forward power reading in Step 1 is normal press the **Transmitter Status** button on the AUI to check for other alarms that may have triggered the RF power module alarm.

RF power module fault validation

Each RF power module has a multi-colour LED on its front panel, which can help in identifying a fault and allowing you to determine whether remedial action is required now or later.

Identify and isolate a defective RF power module, and verify the nature of the defect by checking the LEDs on the RF power modules' front panels. Note which RF power module is not operating normally and producing RF power (i.e., LED is not solid green). Record which RF power modules are displaying an alarm and the state of its LED (see below).

- amber, off: module is RF off
- solid red: module has a non-latching alarm
- flashing red, then green: module is producing RF, but has an alarm
- long red, short amber: module has a latching alarm
- long red, short off: module has no valid serial number
- short red, long off: module has no valid serial address on the internal bus
- long amber, short green: module is producing RF, but no serial communications
- long amber, short red: module is not producing RF and no serial communications

Except in the case of a **High DC Current**, **High PA Volts** and **Residual PA Volts** alarm, attempt to reset an RF power module by disconnecting and reconnecting the RJ45 plug in the front of the module. If you cannot reset the front panel LED alarm, see "RF power module troubleshooting".

RF power module troubleshooting

Refer to "Removing and reinstalling RF power modules" on page 1-24 for removal and installation instructions and then refer to "Troubleshooting RF power modules" on page 1-27 for detailed troubleshooting information.

> *NOTE:*
> *A defective RF power module can be removed for repair, without turning off the transmitter, as described in "Removing an RF power module" on page 1-24. The transmitter can be operated at a reduced output power level with an RF power module removed.*

Module #: Low B+ voltage

A **Module # Low B+ Voltage** alarm is triggered when the B+ voltage is at least 10% below its expected level.

1. If all RF power modules are reporting this alarm, it is very likely there is also a **Rack #: Low B+** alarm. If so, the fault is not likely associated with an RF power module; proceed to "Rack #: Low AC" on page 1-23 for further troubleshooting information. If not, proceed to Step 2.

2. Check and, if necessary, replace the the fuse on the power module interface PWB for the affected RF power module. Each power module interface PWB serves four RF power modules and therefore has four B+ fuses (F1 through F4). Refer to Figures MD-1 and MD-2 in the Mechanical Drawings section of this manual to locate the associated power module interface PWB and then refer to Figure MD-4 or MD-5 to locate the specific fuse.

3. Check and, if necessary, replace the affected RF power module. See "Troubleshooting RF power modules" on page 1-27.

Rack #: Low AC

A **Rack # (1-8): Low AC** alarm is triggered when the ac input voltage is at least 45% below its expected level. Recovery from this alarm is automatic when the ac voltage rises to an acceptable level.

> *NOTE:*
> *An NX50 transmitter has only one rack (or cabinet) and will only display Rack 1.*

If the transmitter does not automatically recover from this alarm, the low ac voltage is normally caused by low ac mains voltage or improper primary taps on the power transformer. Troubleshoot a **Rack #: Low AC** alarm as follows.

> WARNING:
> **Lethal voltages exist in the power supply compartment of the transmitter. Use extreme caution in this area.**

1. Measure the ac input voltage and verify the power transformer is tapped as shown in Section 4, "Connecting transformer taps/load wiring" on page 4-1 of the *NX50 Installation Manual*. If necessary, turn off the transmitter, lock out the ac input voltage and retap the power transformer for the next highest voltage.

2. If the transformer taps are correct, the monitoring circuit is suspect. Contact Nautel for troubleshooting information.

Removing and reinstalling RF power modules

Removing an RF power module

1. Confirm the location of the RF power module that is being removed. Note the alarm text includes a Module serial address that is also identified on the front panel of each RF power module. See Figure 1.3 on page 1-26 to determine the location for a given RF power module (A15 through A34).

2. If possible, turn off the transmitter before removing an RF power module. If you need to remove a module while "on air", disable the RF power module to be removed using the AUI. From the Meters page, click on the Rack information (i) button. The Power Module status screen (see Figure 1.2 on page 1-25) should appear. Click on the associated RF power module's Front Panel Inhibit icon. The icon colour should change from green to red, indicating the RF power module is disabled.

3. After the RF power module is disabled, you should hear a relay in the back of the cabinet drop out (de-energize). If you do not hear the relay de-energize (click), **DO NOT CONTINUE** to Step 4. Try re-enabling and disabling a few times while trying to hear the relay de-energize. If you do not hear the sound, **DO NOT** remove the RF power module while the transmitter is on-air..

4. Disconnect the RJ45 cable from the front of the RF power module. If the module was not disabled in Step 2, you should now hear a relay in the back of the cabinet drop out (de-energize)

5. Remove both mounting screws from the RF power module's front panel.

6. Grasp the handle on the front of the RF power module and carefully pull the RF power module out of the transmitter.

Figure 1.2: Disabling/Enabling an RF Power Module

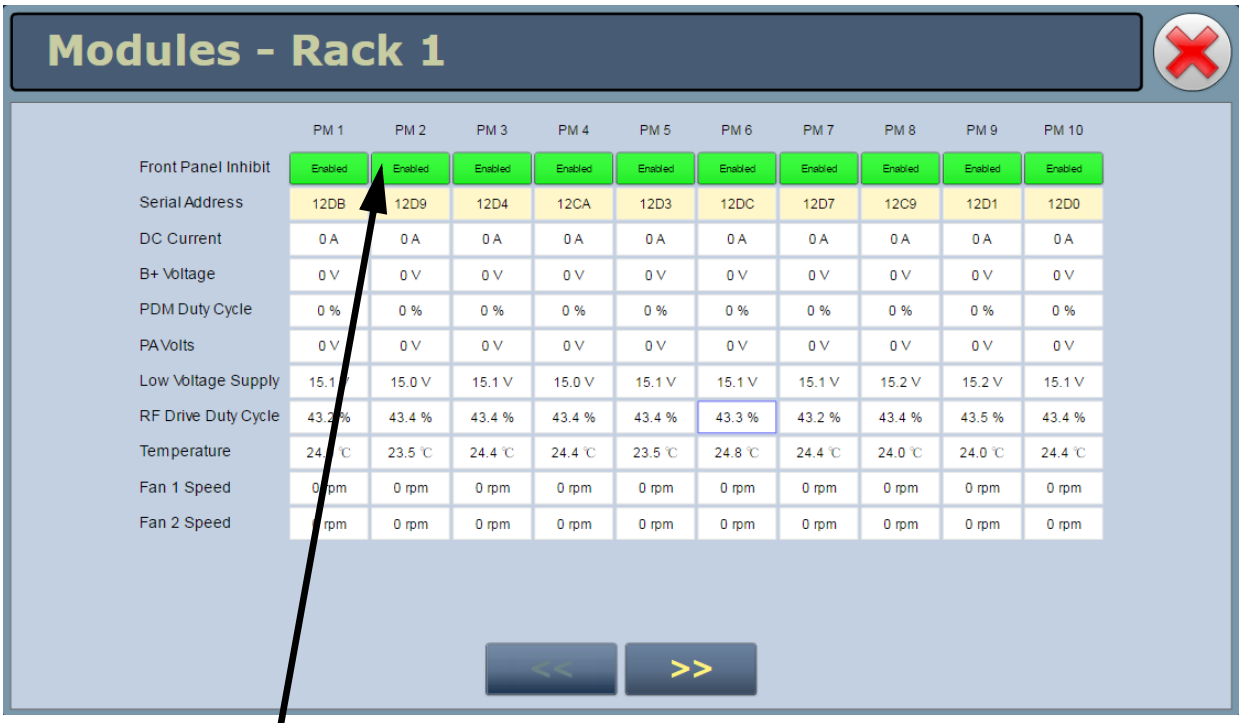

Green indicates enabled. Click to disable (will turn red); click again to re-enable (will turn green)

Installing an RF power module

1. If possible, turn off the transmitter before installing an RF power module. Grasp the handle on the front of the RF power module and insert it into the transmitter.

2. Carefully push the RF power module into place so that its card-edge connector mates with the transmitter.

3. Install both mounting screws in the RF power module's front panel.

4. Connect the RJ45 cable to the front of the RF power module. If you are installing the RF power module while the transmitter is "on-air", click on the associated RF power module's **Front Panel Inhibit** icon as shown in Figure 1.2. The icon colour should change from red to green, indicating the RF power module is enabled. You should hear a relay in the back of the transmitter pick up (energize).

5. Upgrade the subsystem software using the AUI's **Upgrade Software** page under the **System Settings** menu. See the *NX50 Operations and Maintenance Manual* for detailed instructions.

Figure 1.3: RF Power Module Locations

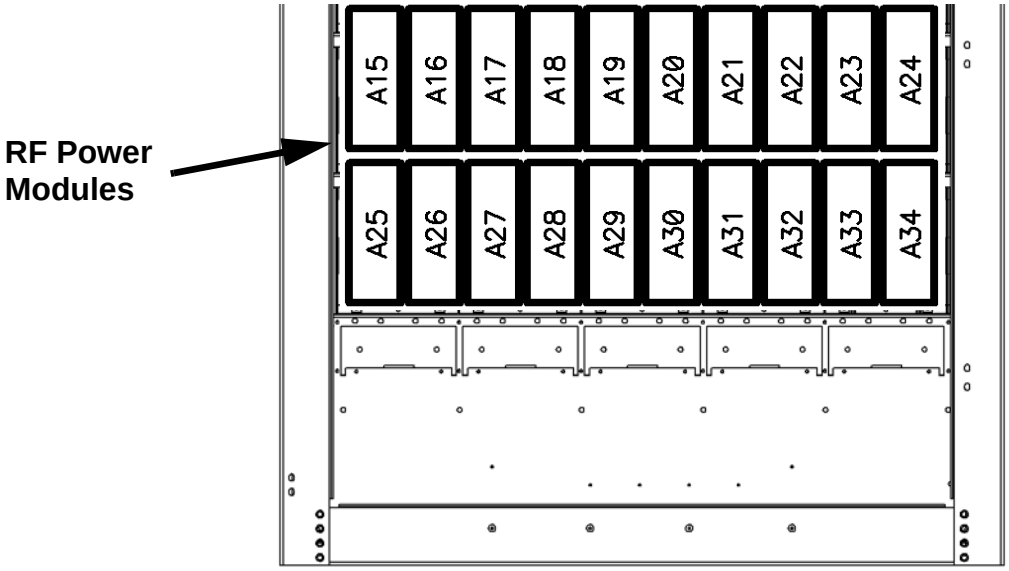

Front Door Removed for Clarity

Troubleshooting RF power modules

Maintenance philosophy

Recommended troubleshooting procedures for RF power modules are limited to "go" or "no-go" resistance or diode measurements on the module's power semi-conductors and replacement procedures for these devices.

Special Tools and Test Equipment

The following test equipment and cables are required to troubleshoot an RF power module.

- A digital multimeter with resistance and diode settings.
- A torque screwdriver with a torque range of 0.0 to 2.26 N-m (0 - 20 in.-lbs). Required for installing MOSFET attaching hardware.
- A soldering iron and desoldering tool.
- An NX50 spares kit (contains replacement semi-conductors).

Electrostatic Precautions

The RF power module contains semiconductor devices that are susceptible to damage from electrostatic discharge. Be sure to follow the electrostatic precautions in "Electrostatic protection" on page 1-3 at all times.

Preparation for Troubleshooting

1. Follow the procedure in "Removing an RF power module" on page 1-24 to remove the RF power module from the transmitter.
2. Place the RF power module on a suitable work surface.
3. Perform the resistance measurements on the modulator and power amplifier MOSFETs as described in "Resistance measurements" on page 1-28.
4. Perform the diode checks on the free-wheel diodes as described in "Power Amplifier FET replacement" on page 1-30

Resistance measurements

Complete the following resistance measurements for each suspect RF power module. See Figure 1.4 on page 1-29 to identify the power MOSFETs on the RF power module.

1. Remove fuse F1 from its holder and measure its resistance using a digital multimeter. A blown fuse will measure an open circuit. If the fuse is OK, return it to its holder.

2. For each power amplifier MOSFET (Q7 through Q10) and each modulator MOSFET (Q11, Q12 and Q13), use a digital multimeter to make the following resistance measurements. Note that Q7 through Q10 have screw-head terminals and Q11 through Q13 have solder pads (see Figure 1.4 on page 1-29):

   - Check for 1,000 Ω between the gate and source.

   - Check for an open circuit between the gate and drain.

3. If either measurement in Step 2 is not satisfactory, replace the affected power amplifier MOSFET (see "Power Amplifier FET replacement") or modulator MOSFET (see "Modulator FET replacement" on page 1-32).

4. If both measurements in Step 2 are satisfactory, replace the entire RF power module (see "Removing and reinstalling RF power modules" on page 1-24).

Diode checks

Complete the following diode checks for each suspect RF power module. See Figure 1.4 on page 1-29 to identify the free-wheel diode on the RF power module.

1. Use a digital multimeter (on its diode setting) to check free-wheel diode CR8, noting the anode (A) and cathode (K) markings (see Figure 1.4 on page 1-29):

2. If the diode is not satisfactory, replace the it by desoldering its surface-mount leads and case from the PWB. Locate a replacement diode (Nautel Part # QM54) in the spares kit, if purchased, and solder it to the PWB, noting correct orientation.

3. If the diode is satisfactory, proceed to MOSFET replacement, as necessary, or replace the entire RF power module (see "Removing and reinstalling RF power modules" on page 1-24).

Figure 1.4: RF Power Module MOSFET and Diode Location

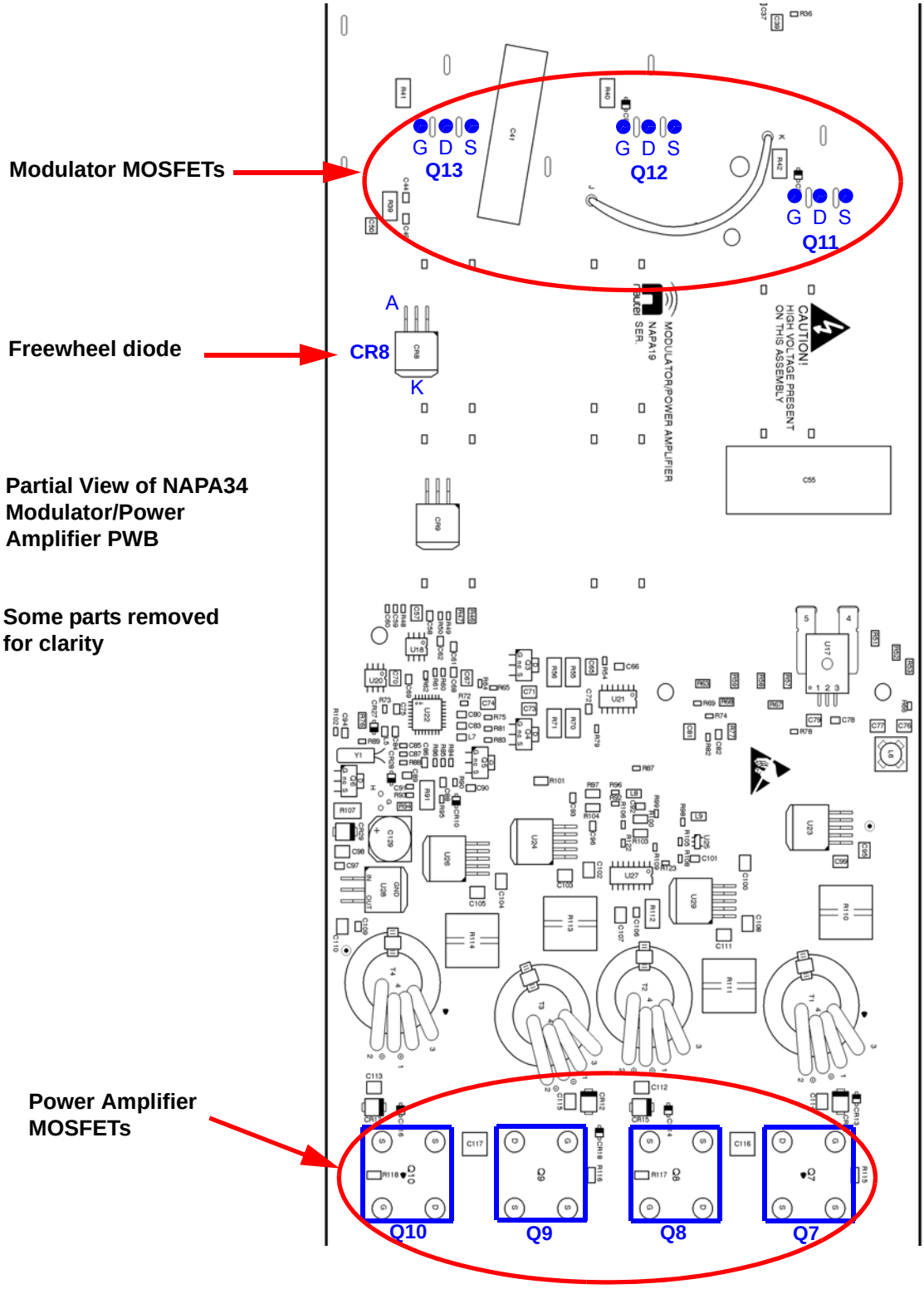

Power Amplifier FET replacement

See Figure 1.5 on page 1-31.

1. Remove five M3 screws that secure the modulator/power amplifier PWB to the chassis.
2. Remove 16 M4 screws (four for each MOSFET) that secure the PWB to the MOSFETs.
3. Swing the PWB away from the chassis and remove two M4 screws that secure the defective MOSFET to the chassis. If necessary, remove the screw securing the thermistor wire to the PWB.
4. Discard the defective MOSFET and its associated thermal pad (between MOSFET and chassis).
5. Ensure the surface of the chassis/heat sink is clean and free of debris.
6. Obtain a replacement MOSFET (Nautel Part # QR68) and a new thermal pad (Nautel Part # HAK55) from the spares kit, if purchased, and install them on the RF power module chassis using the two M4 screws removed in step 3. Torque hardware to 12 in-lbs (1.3 N-m).
7. Replace any other defective MOSFETs and then re-install the PWB to the chassis by reversing the instructions in steps 1 through 3. Torque the 16 MOSFET screws (four for each MOSFET) to a maximum of 10 in-lbs (1.1 N-m).
8. Return the power module to service (see "Installing an RF power module" on page 1-26).

Figure 1.5: Power Amplifier FET Replacement

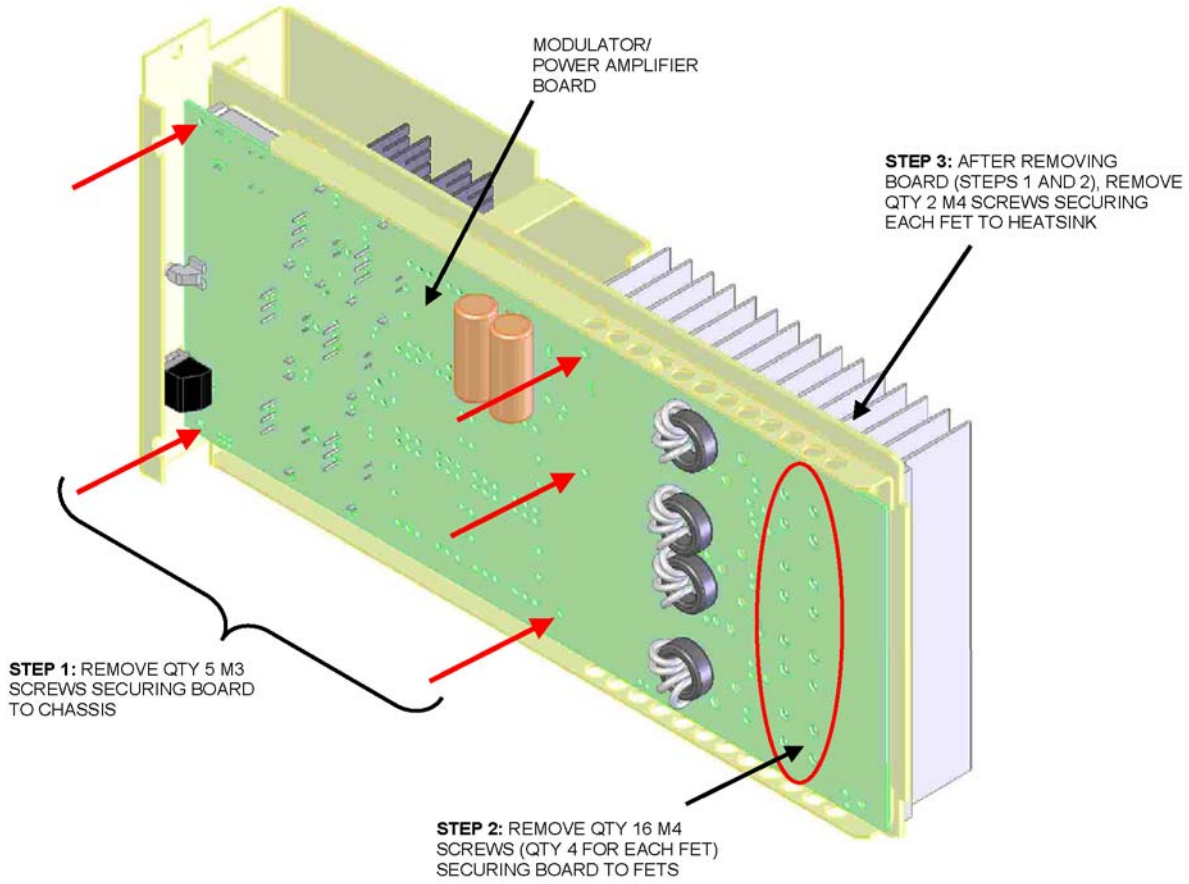

Modulator FET replacement

1. Remove five M3 screws that secure the modulator/power amplifier PWB to the chassis.

2. Remove 16 M4 screws (four for each MOSFET) that secure the PWB to the MOSFETs.

3. Desolder the gate, drain and source connections that secure the defective MOSFET to the PWB (see Figure 1.4 on page 1-29). Also desolder the two connections that secure the defective MOSFET's heatsink to the PWB. Remove the heat sink and MOSFET from the PWB.

4. Remove the heatsink clip that holds the MOSFET on its heat sink. Remove and discard the defective MOSFET.

> **CAUTION:**
> The heat sinks of modulator MOSFETs are coated with a film of thermal compound. Use care to ensure the film does not become contaminated with foreign particles.
>
> When installing a replacement MOSFET, visually inspect the mating surfaces of the MOSFET and its heat sink. Ensure the heat sink surface is coated with a thin film of thermal compound. Ensure foreign particles that may affect thermal transfer are not embedded in the compound.

5. Clean the surface of the heat sink and make sure its is free of debris.

6. Apply a thin film of thermal compound to the heatsink.

7. Obtain a replacement MOSFET (Nautel Part # QR75) from the spares kit, if purchased, and install it on the heat sink using the alignment post on the heat sink as an installation aid. Reinstall the heat sink clip removed in Step 4.

8. Replace any other defective MOSFETs and then re-install the heatsink on the PWB, first by soldering the two heatsink connections and then by soldering the MOSFET's gate, drain and source leads.

9. Reinstall the PWB to the chassis by reversing the instructions in steps 1 and 2. Torque the 16 power amplifier MOSFET screws (four for each MOSFET) to a maximum of 10 in-lbs (1.1 N-m) .

10. Return the power module to service (see "Installing an RF power module" on page 1-26).

Control/exciter panel board removal/replacement

The control/exciter panel (A11, see Figure 1.6) contains the control/interface PWB (A11A1), two digital AM exciter PWBs [A (A11A2) and B (A11A3)], remote interface PWB (A11A4), optional GPS sync PWB (A11A5) and optional Exgine PWB (A11A7). The control/interface PWB physically interconnects with both digital AM exciter PWBs and the remote interface PWB.

> *NOTE:*
> *To remove the control/interface PWB, you must first remove either the remote interface PWB or both digital AM exciter PWBs.*

Figure 1.6: NX50 Control/Exciter Panel

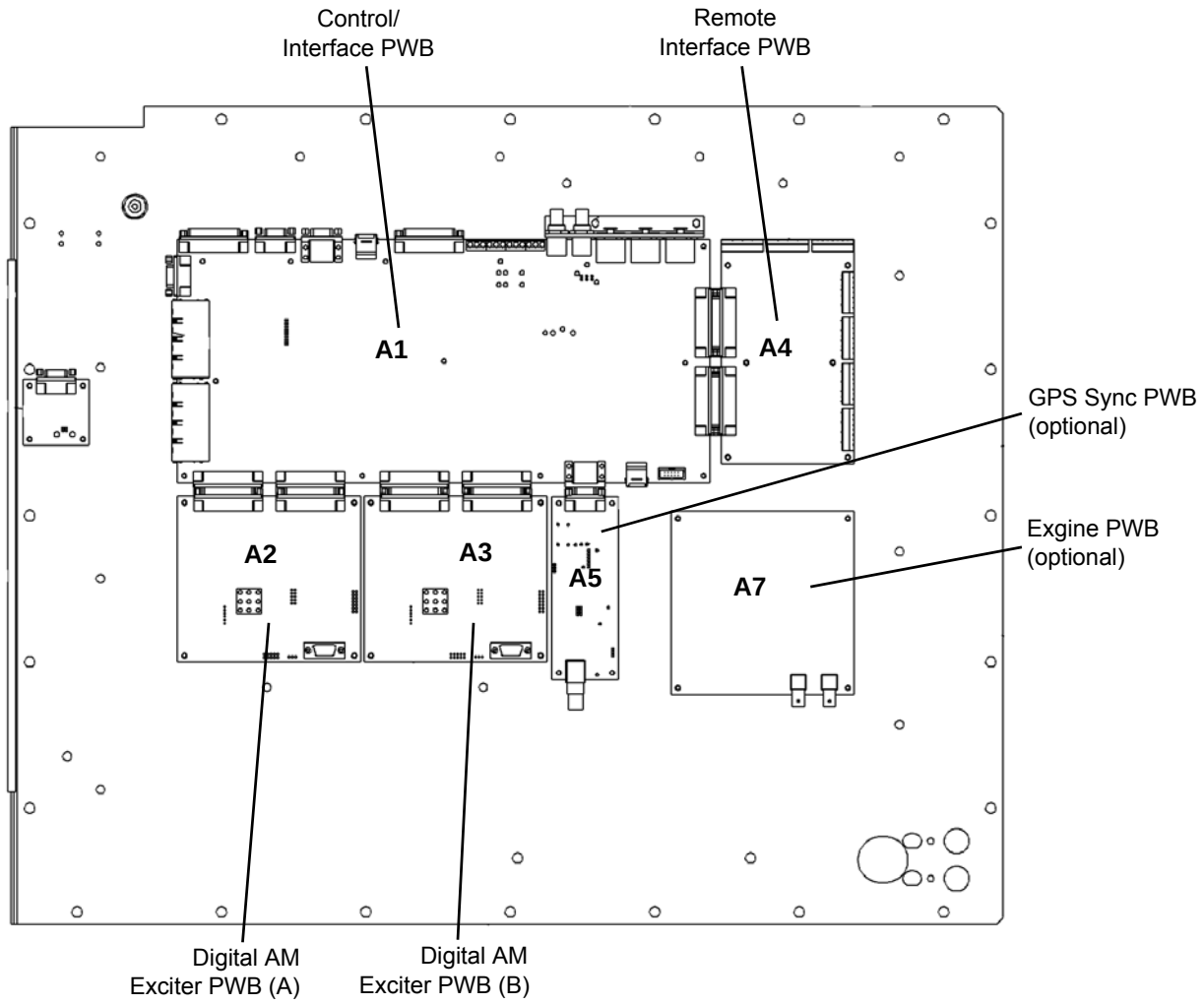

Remote interface PWB replacement

1. Remove and retain six sets of mounting hardware from the remote interface PWB (A11A4).

2. Pull the remote interface PWB away from the control/interface PWB (A11A1). It may be helpful to gently pry the connector loose with a screwdriver.

3. Set the STATUS/ALARM jumpers (E1 through E16) on the new remote interface PWB to the same positions as the defective PWB.

4. Use an indelible marker to identify the LED and switch labels on the new remote interface PWB to match the labels on the defective PWB.

5. Install the new remote interface PWB by reversing Step 1 and Step 2.

6. Reconnect all interface wiring to the new remote interface PWB.

Digital AM exciter PWB replacement

1. Set the transmitter to its RF Off state.

2. Connect a cable between the defective digital AM exciter PWB's RS-232 connector (9-pin D-sub J3, see Figure 1.7 on page 1-34) and a PC.

Figure 1.7: Part of Digital AM Exciter PWB - Location of RS-232 Connector J3

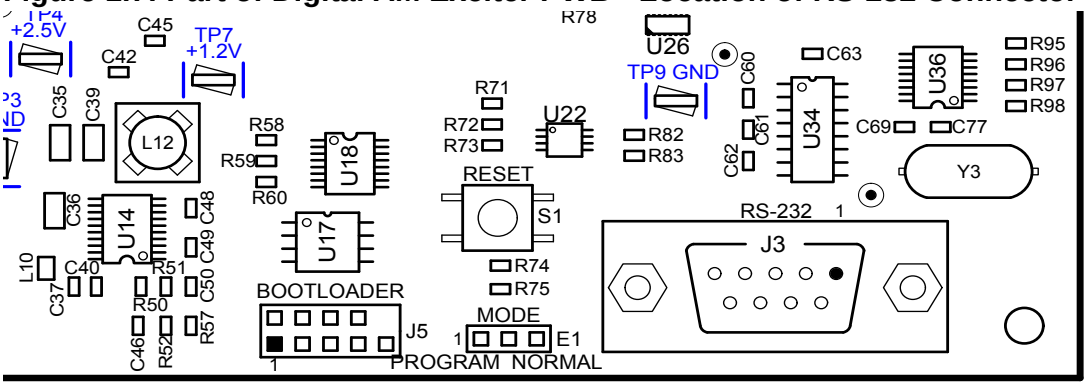

3. On MODE program header E1 (see Figure 1.7), install the shorting jumper in the PROGRAM position (shorting pins 1 and 2). Press RESET switch S1, located directly above E1.

4. From the PC, run the NCode Uploader application (see Figure 1.8). Click Settings and ensure the COM port reflects the port that the serial cable is connected to on your PC.

Figure 1.8: NCode Uploader Menu

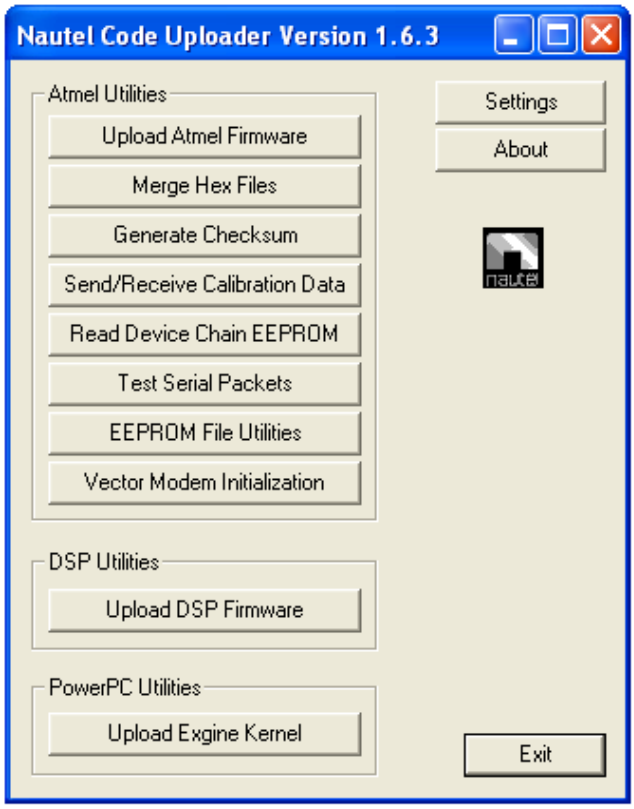

Figure 1.9: Upload DSP Firmware Menu

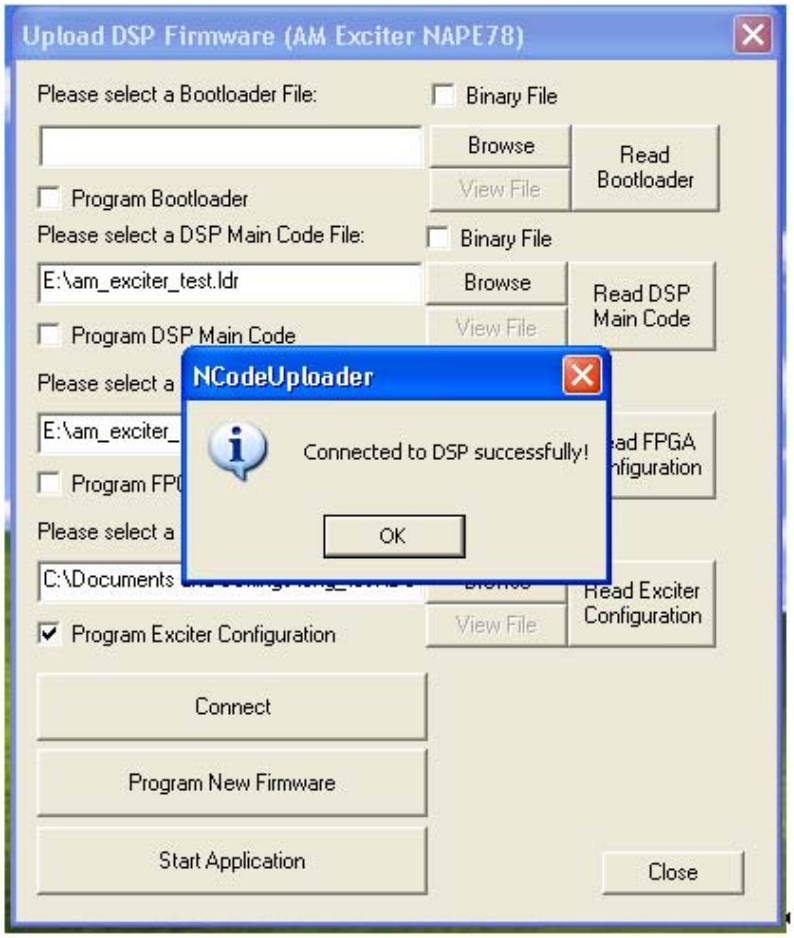

5. Click the **Upload DSP Firmware** button (see Figure 1.8 on page 1-35). The menu shown in Figure 1.9 should appear, along with the **Connected to DSP successfully!** prompt. Click **OK**.

6. Once connected, click the **Read Exciter Configuration** button. Select **Save file to disk** and click **OK** (see Figure 1.10 on page 1-37) to save the current calibration data. Browse to a desired location to save the file.

7. If the defective exciter does not allow the previous steps to be performed, try using the operational exciter to save the required calibration data. In this case, repeat Step 2 through Step 6 for the operational exciter's digital AM exciter PWB. If there is no operational exciter, contact Nautel for the required calibration data.

Figure 1.10: Upload DSP Firmware Menu - Select an Option

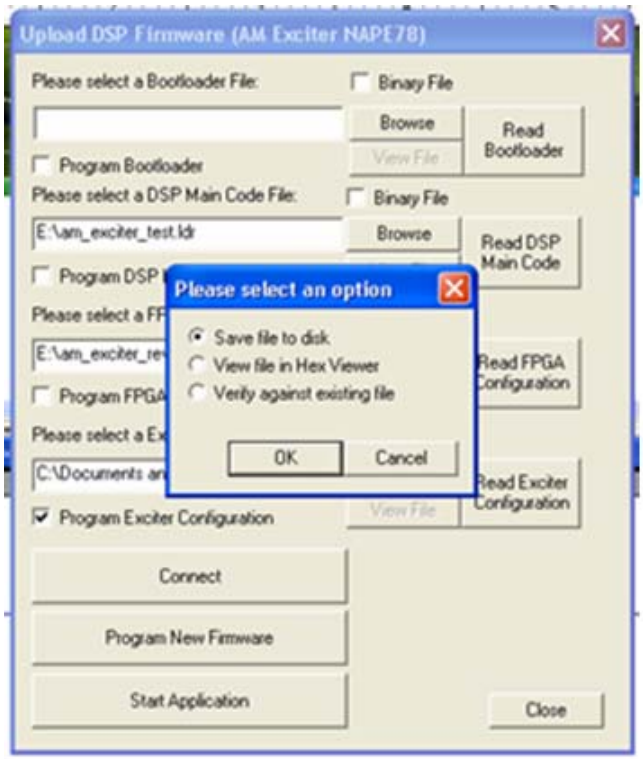

8. Remove and retain four sets of mounting hardware from the digital AM exciter PWB being replaced (A11A1 or A11A2).

9. Pull the digital AM exciter PWB away from the control/interface PWB (A11A1). It may be helpful to gently pry the connector loose with a screwdriver.

10. Install the new digital AM exciter PWB by reversing Step 8 and Step 9.

11. Connect a cable between the replacement digital AM exciter PWB's RS-232 connector (9-pin D-sub J3, see Figure 1.7 on page 1-34) and a PC.

12. On the digital AM exciter PWB's MODE program header E1 (see Figure 1.7), install the shorting jumper in the PROGRAM position (shorting pins 1 and 2). Press RESET switch S1, located directly above E1.

13. Once connected, use the PC to browse to the configuration file saved in Step 6 by clicking the Browse button next to the *"Please Select a Exciter Configuration file:"* field (see Figure 1.11 on page 1-38).

Figure 1.11: Upload DSP Firmware Menu - Browse for configuration file

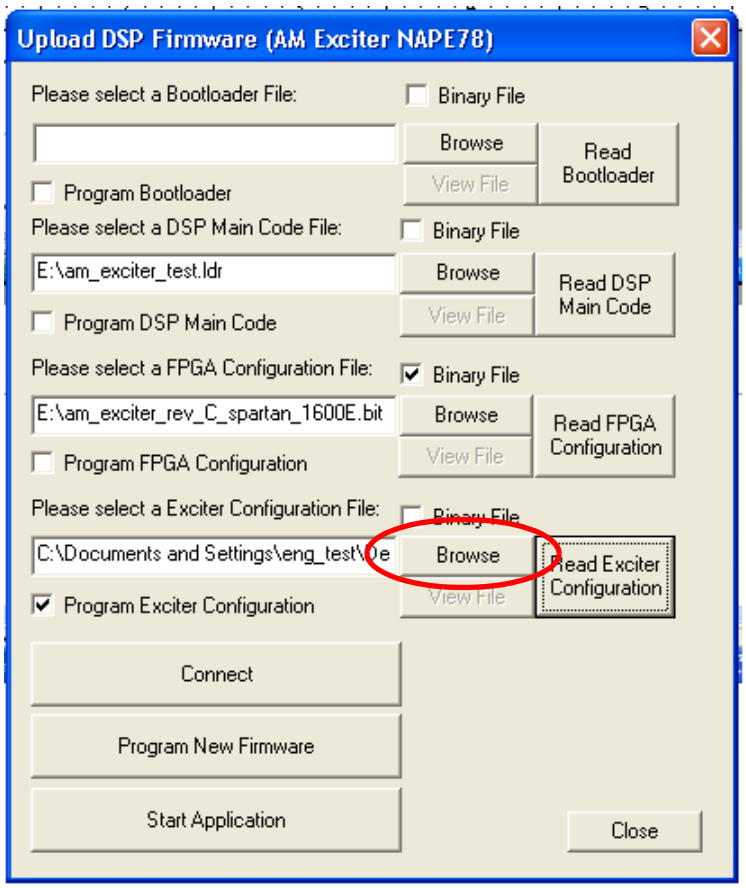

14. Click the **Program Exciter Configuration** checkbox (see Figure 1.11 on page 1-38) so that the box contains a checkmark and then click the **Program New Firmware** button.

15. On the digital AM exciter PWB's **MODE** program header E1 (see Figure 1.7), return the shorting jumper to the **NORMAL** position (shorting pins 2 and 3). Press **RESET** switch S1, located directly above E1.

16. On the front panel AUI, reset any active alarms.

17. Upgrade the subsystem software using the AUI's **Upgrade Software** page under the **System Settings** menu. See the *NX50 Operations and Maintenance Manual* for detailed instructions.

18. Set the transmitter to its **RF On** state.

Control/interface PWB replacement

1. Record the following information (as a minimum) from the front panel AUI:

   - **Presets** page: record settings for all desired presets
   - **Scheduler** page: record **Rules** and **Daily Events** information
   - **Factory Settings** page: record information in the **RF Symmetry** and **Transmitter Type** menus
   - **System Settings** page: record all information in the **Exciter Clock Calibration** and **Power Lockout** menus
   - **User Settings** page: record all information in the **Network Setup** menu
   - **Remote I/O** page: record all information for the user-defined remote **Inputs** and **Outputs**, including **Channel** and **Control** settings
   - **Changeover** page: record all information

2. Use a digital multimeter to measure the VSWR threshold voltage on the control/interface PWB at R73-LHS. Record this voltage.

3. Set the transmitter to its **RF Off** state. Turn off (disable or lock out) the ac power at the source. Open the front door to gain access to the exciter panel (see Figure 1.6 on page 1-33).

4. Disconnect all cables attached to the control/interface PWB (A4), taking note of the connector labels on the cables and the PWB.

5. Remove and retain the two screws securing the connector bracket in the upper, left portion of the control/interface PWB.

6. Remove either the remote interface PWB (A11A4) or both digital AM exciter PWBs (A11A2 and A11A3), whichever is easier. It may be helpful to gently pry the connectors loose with a screwdriver.

7. Remove and retain 13 sets of mounting hardware from the control/interface PWB (A11A1).

8. Obtain a replacement control/interface PWB (Nautel Part # NAPC160B/01).

9. Set the **COMB CONT INTLK** (E1) and **REMOTE SUPPLY** (E3) jumpers on the replacement PWB to the same positions as the defective PWB.

10. Install the new control/interface PWB by reversing Step 4 through Step 7. For connector mating assistance, refer to the connector mating tables in Section 4, "Wiring/connector lists" on page 4-1.

11. Re-enter all the AUI information recorded in Step 1.

12. Set the time using the front panel AUI's **Factory Settings - Time Setup** page.

13. Measure the VSWR threshold voltage on the control/interface PWB at R73-LHS. Adjust **VSWR THRESHOLD** potentiometer R78 until the multimeter reading is the same as the voltage recorded in Step 2.

14. Upgrade the subsystem software using the AUI's **Upgrade Software** page under the **System Settings** menu. See the *NX50 Operations and Maintenance Manual* for detailed instructions.

GPS Sync PWB replacement

1. Remove and retain four sets of mounting hardware from the GPS sync PWB being replaced (A11A5).

2. Set the jumpers on the replacement PWB to the same positions as the defective PWB.

3. Install the new GPS sync PWB by reversing Step 1 and Step 2.

> *NOTE:*
> *Remove the jack screws from 9-pin D-sub connector J1 on the new GPS sync PWB before installing it.*

Exgine PWB replacement

1. Remove and retain four sets of mounting hardware from the exgine PWB (A11A7).

2. Set the jumpers on the replacement PWB to the same positions as the defective PWB.

3. Install the new exgine PWB by reversing Step 1 and Step 2.

PDM Drive Distribution PWB replacement

WARNING:
Lethal voltages exist inside the transmitter when the power is turned on. Turn off the power at the source and verify the 20 bright green LEDs on the power module interface PWBs - in the back of each cabinet - are off before removing any connections or PWBs.

See Figure 1.12.

Figure 1.12: Location of PDM Drive Distribution PWB

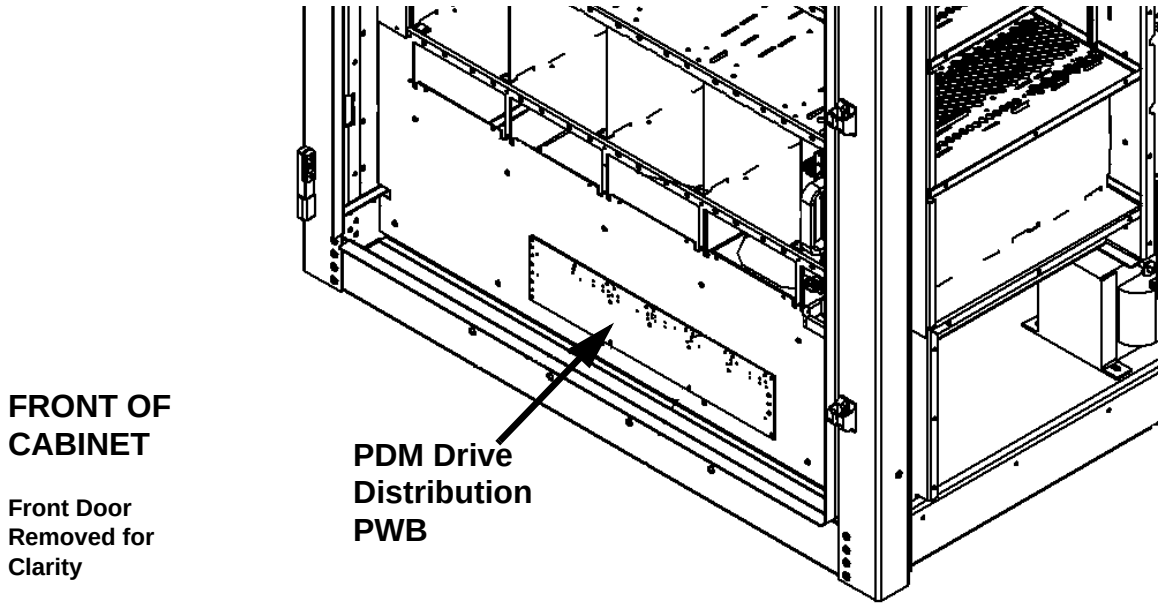

1. Open the front door.
2. Disconnect all cables attached to the PDM drive distribution PWB, taking note of the connector labels on the cables and the PWB.
3. Remove and save six sets of mounting hardware.
4. Remove the defective PWB from the transmitter.
5. Reverse Step 1 through Step 4 to install the new PWB.

RF drive distribution PWB replacement

WARNING:
Lethal voltages exist inside the transmitter when the power is turned on. Turn off the power at the source and wait until the 20 bright green LEDs on the power module interface PWBs - in the back of each cabinet - are off before removing any connections or PWBs.

See Figure 1.13.

Figure 1.13: Location of RF Drive Distribution and Rack Interface PWBs

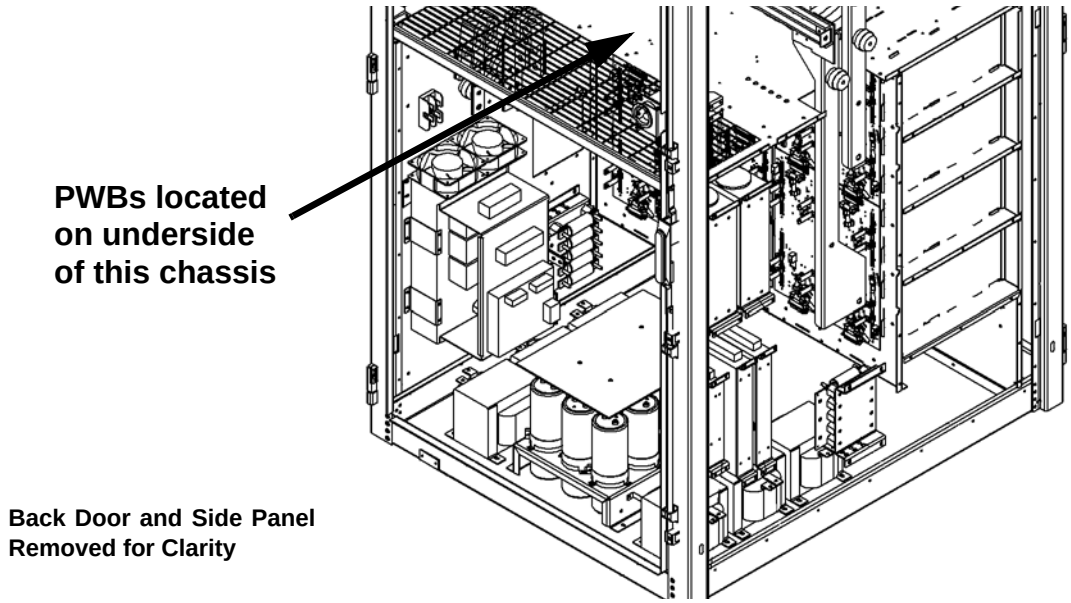

1. Turn off the ac power at the source. Open the back door and verify the green LEDs on the power module interface PWBs are off, indicating the capacitors are discharged. For additional safety, measure the dc voltage across the + and - terminals of any of the large, electrolytic capacitors on the floor of the cabinet. There should be little or no voltage.

2. Disconnect all cables attached to the RF drive distribution PWB, taking note of the connector labels on the cables and the PWB.

3. Carefully remove and save seven sets of mounting hardware.

4. Remove the PWB from the transmitter.

5. Reverse Step 1 through Step 4 to reinstall the PWB.

Rack Interface PWB replacement

> **WARNING:**
> **Lethal voltages exist inside the transmitter when the power is turned on. Turn off the power at the source and wait until the 20 bright green LEDs on the power module interface PWBs - in the back of each cabinet - are off before removing any connections or PWBs.**

See Figure 1.13 on page 1-42.

1. Turn off the ac power at the source. Open the back door and verify the green LEDs on the power module interface PWBs are off, indicating the capacitors are discharged. For additional safety, measure the dc voltage across the + and - terminals of any of the large, electrolytic capacitors on the floor of the cabinet. There should be little or no voltage.

2. Remove the interconnecting RF drive distribution PWB (see"RF drive distribution PWB replacement" on page 1-42). Gently pry the connectors loose with a screwdriver.

3. Disconnect all cables attached to the rack interface PWB, taking note of the connector labels on the cables and the PWB.

4. Carefully remove and retain six sets of mounting hardware.

5. Remove the rack interface PWB from the transmitter.

6. Obtain a replacement rack interface PWB (Nautel Part # NAPI152A) and set DIP switch S1 as follows.

S1 Position	A6 Setting
8	CLOSED
7	CLOSED
6	OPEN
5	CLOSED
4	CLOSED
3	CLOSED
2	OPEN
1	OPEN

7. Reverse Step 1 through Step 5 to reinstall the PWB.

8. If you are replacing the Controller's rack interface PWB, disengage all RF power modules in the transmitter before turning on the ac power (see "Removing and reinstalling RF power modules" on page 1-24).

9. One at a time, reinstall each RF power module. The LED sequence on the front panel of each module should change to solid red. Reconnect each RF power module's PDM cable; the LED sequence should change to flashing amber.

10. Upgrade the subsystem software using the AUI's Upgrade Software page under the System Settings menu. See the *NX50 Operations and Maintenance Manual* for detailed instructions.

SCR Rectifier Inspection/Replacement

WARNING:
Lethal voltages exist inside the transmitter when the power is turned on. Turn off the power at the source and wait until the 20 bright green LEDs on the power module interface PWBs - in the back of each cabinet - are off before removing any connections or assemblies.

See Figure 1.14.

Figure 1.14: Location of SCR Rectifier Assembly U1 and its Cooling Fans

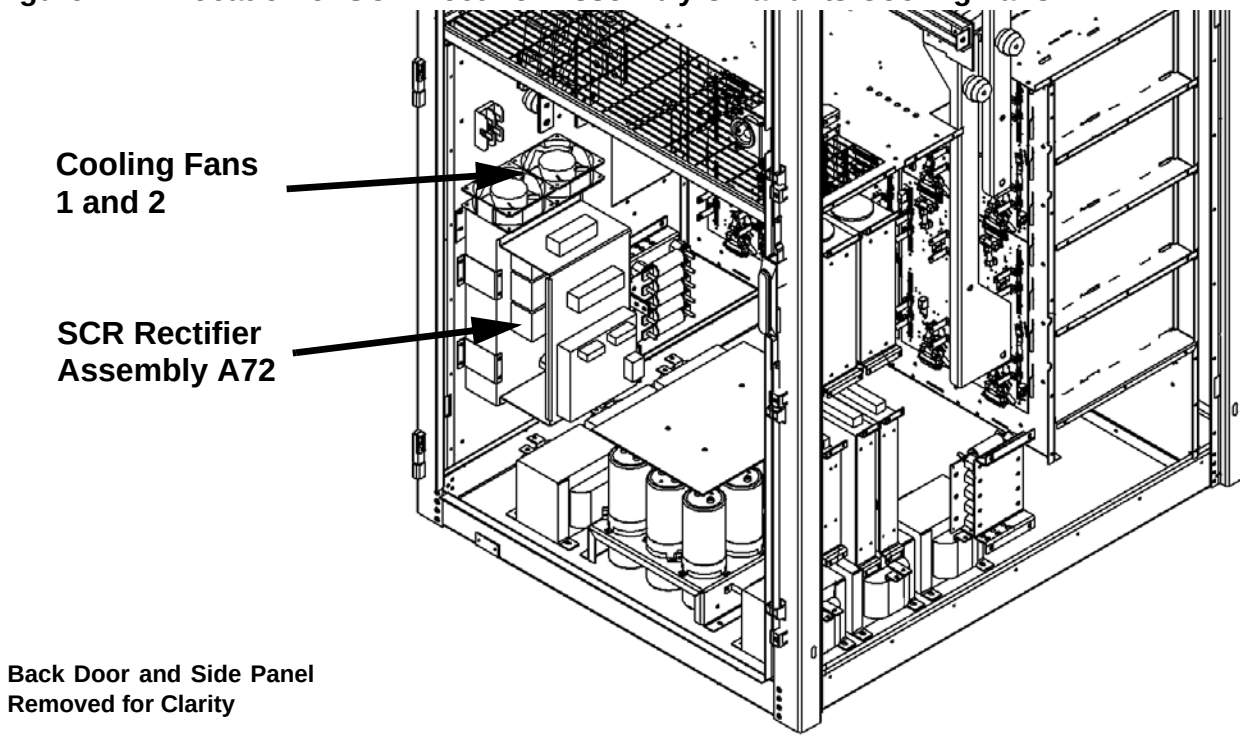

1. Turn off the ac power at the source. Open the back door and verify the green LEDs on the power module interface PWBs are off, indicating the capacitors are discharged. For additional safety, measure the dc voltage across the + and - terminals of any of the large, electrolytic capacitors on the floor of the cabinet. There should be little or no voltage.

2. If you are responding to a **Rectifier Fan 1 (or 2) Fail** alarm (if not, proceed to Step 3), inspect the SCR rectifier assembly's cooling fans (see Figure 1.14 on page 1-45) for debris that might restrict proper movement of the fan blades. If there is no noticeable debris, remove the suspect fan (1 or 2, as specified by the alarm) by disconnecting its wiring and then removing the four Philips screws securing it to the top of A72. Replace the fan with a suitable replacement (48 V muffin fan, EBM Part # W1G110-AG07-05). Secure the replacement fan to the SCR rectifier assembly and connect the fan's wiring as it was previously installed. Return the transmitter to service.

3. Disconnect all wiring attached to the SCR rectifier assembly, taking note of the wiring labels.

4. While supporting the weight of the SCR rectifier assembly, remove and save 12 sets of mounting hardware.

5. Remove the SCR rectifier assembly from the transmitter.

6. Reverse Step 1 through Step 4 to reinstall the new or repaired SCR rectifier assembly. Ensure all connections are tight, noting some connections have special torque requirements (e.g., torque the 2 AWG wires connecting to LINE 1, LINE 2 and LINE 3 to 12 N-m (106 in-lbs). For wiring termination assistance with connections to the SCR rectifier assembly (A72), check the wiring list in Section 4, "Wiring/connector lists" on page 4-1.

Low Voltage Power Supply Replacement

WARNING:
Lethal voltages exist inside the transmitter when the power is turned on. Turn off the power at the source and wait until the 20 bright green LEDs on the power module interface PWBs - in the back of each cabinet - are off before removing any connections or assemblies.

See Figure 1.15 on page 1-47.

1. Turn off the ac power at the source. Open the back door and verify the green LEDs on the power module interface PWBs are off, indicating the capacitors are discharged. For additional safety, measure the dc voltage across the + and - terminals of any of the large, electrolytic capacitors on the floor of the cabinet. There should be little or no voltage.

2. Disconnect all wiring attached to the affected power supply module (U3 through U7), taking note of the connector labels on the cables.

Figure 1.15: Location of Low Voltage Power Supplies U3 through U7

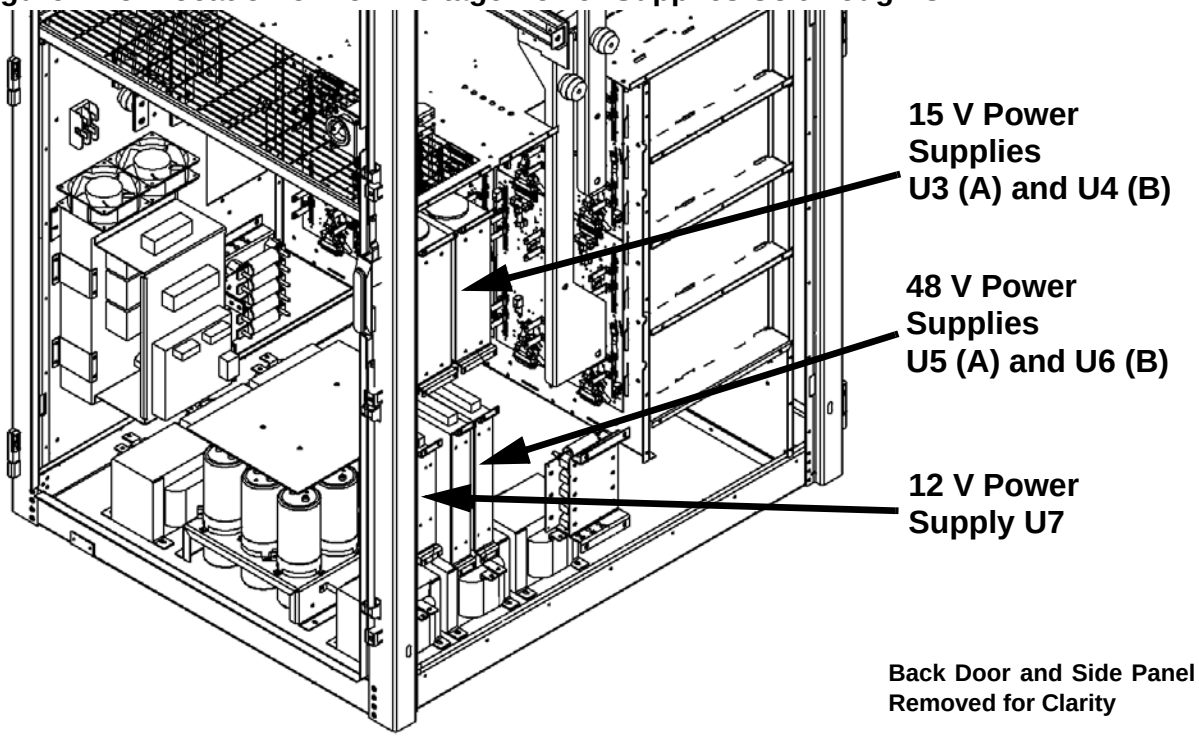

3. Remove and save four sets of mounting hardware.

4. Remove the power supply module from the transmitter, noting its reference designation (U3 through U7) should be marked on the side panel near the module.

5. Reverse Step 1 through Step 4 to reinstall the new power supply module. Reconnect all wiring.

RF Power Module Fan Tray replacement

See Figure 1.16.

Figure 1.16: Location of Fan Tray Assemblies

Fan Tray	Associated RF Power Module #s (A15-A34)
A35	A15,A16,A25,A26
A36	A17,A18,A27,A28
A37	A19,A20,A29,A30
A38	A21,A22,A31,A32
A39	A23,A24,A33,A34

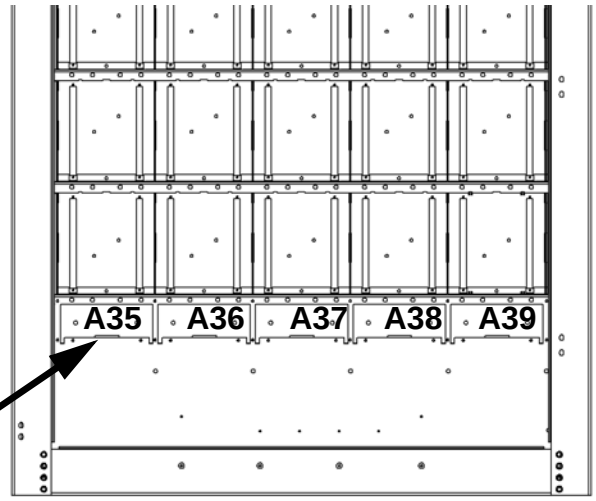

Fan Tray Assemblies

Front Door Removed for Clarity

1. Open the front door.

2. Determine the suspect fan tray assembly (A35 through A39) associated with the offending RF power module # alarm(s).

3. Remove and save two sets of mounting hardware. Pull the fan tray assembly out of the transmitter.

4. Reverse Step 1 through Step 3 to install the new fan tray assembly.

Section 2: Detailed Circuit Descriptions

Refer to the functional block diagram: "NX Series Transmitter Block Diagram" on page 1-11 and high level descriptions of the *NX50 Operation and Maintenance Manual*.

This section provides a detailed description of the transmitter's key modules and assemblies, including:

- Control/interface PWB (NAPC160B/01) - see page 2-1
- Digital AM exciter PWB (NAPE78A/01) - see page 2-5
- Remote interface PWB (NAPI106) - see page 2-8
- RF power module (NAP39A) - see page 2-9

NX50 electrical schematics

The descriptions in this section all refer to the NX50 electrical schematics listed in Table 5.1 on page 5-5 of the *NX50 Troubleshooting Manual*.

Control/interface PWB (NAPC160B/01)

See electrical schematics Figures SD-7 through SD-13.

Microcontroller

Microcontroller IC U57 interfaces with the transmitter via several serial buses. J3 provides an isolated RS-232 interface with the front panel's advanced user interface (AUI). J13 provides an isolated RS-232 interface for debugging. There are also serial interfaces with exciter A (via J17), exciter B (via J19), optional Exgine PWB (via J21), optional DRM exciters A (via J22A) and B (via J22B) and optional GPS sync PWBs A (via J27A) and B (via J27B).

U57 also acts as an internal and external serial interface for transmitter alarm and status signals.

RF drive selection and distribution

The RF drive signals from exciters A and B are applied to J16-13 (+)/J16-25 (-) and J18-13 (+)/J18-25 (-) respectively. Each signal is stepped up through a 1:4 transformer (T7 or T5) to a nominal 7 volts peak-to-peak.

The RF drive signals are applied to high speed comparators U13:A and U42:A, which are used to generate a square wave. These comparators also receive threshold data from digital potentiometer U38, which acts to control the RF drive duty cycle. The outputs of the high speed comparators are applied to multiplexer U22, which selects the active RF drive signal based on the status of the *Select Side B* input on U22-1.

The active RF drive 1 and 2 signals are buffered using AND gates U20:A through U20:D and then split, using differential line drivers U9 through U12, to be applied to each cabinet's RF drive distribution PWB (A16). An *RF Drive Sample* signal is also applied to microcontroller IC U57 for monitoring.

PDM drive selection and distribution

The PDM 1 through 9 signals from exciters A and B are applied to J16-9 (1)/J16-5 (2)/J16-16 (3)/J16-6 (4)/J16-17 (5)/J16-3 (6)/J16-18 (7)/J16-4 (8)/J18-15 (9) and J18-9 (1)/J18-5 (2)/J18-16 (3)/J18-6 (4)/J18-17 (5)/J18-3 (6)/J18-18 (7)/J18-4 (8)/J18-15 (9) respectively.

The PDM signals are applied to multiplexers U24, U25 and U26, which select the active PDM signals based on the status of the *Select Side B* input on U22-1.

The nine active PDM signals are split, using differential line drivers U2 through U5 and U14 through U17, and applied in three groups to each cabinet's PDM distribution PWB (A17). A *Modulation Sample*, representative of the sum of all nine signals, is also applied to microcontroller IC U57 for monitoring.

Each PDM signal is monitored by a comparator (U31, U32 or U33). If one of the PDM signals goes logic high for longer than desired, a *PDM Latch* signal is generated and applied to microcontroller U57. This will inhibit the transmitter's RF output power and generate an exciter changeover, if enabled.

Audio input conditioning

Various audio inputs can be applied to the control/interface PWB. All inputs are conditioned and then applied to the digital AM exciter PWBs via connectors J17 (exciter A) and J19 (exciter B).

Serial frame, clock and data inputs from the optional Exgine PWB (A11A7) are applied to RJ45 connector J20. These low voltage differential inputs are converted to 3 V CMOS output levels by LVDS receivers U66 and U73.

Synchronization input selection

Various synchronization inputs (1 PPS, 1 kHz and 10 MHz) can be applied to the control/interface PWB. Selection circuits determine which sources (A or B, then internal or external) provide the signals applied to the digital AM exciter PWBs via connectors J17 (exciter A) and J19 (exciter B).

1 PPS, 1 kHz and 10 MHz inputs from the optional GPS sync PWBs [A11A5 (A) and A11A6 (B)] are applied to connectors J5A and J5B respectively. Multiplexer U44 selects which sync inputs are passed based on the status of the *Select Sync B* input on U44-1. Shorting jumper E1 must be installed in the EXT position (shorting pins 1 and 2).

Multiplexer U45 selects either internal or external sync inputs based on the status of the *Select Sync Int* input on U45-1. For internal input selection, the inputs from the selected GPS sync PWB (from multiplexer U44) are applied to the digital AM exciter PWBs. For external input selection, the externally sourced 1 PPS (J9) and 10 MHz (J8) inputs are applied to the digital AM exciter PWBs.

Remote inputs and outputs

The user can interface with up to 16 pre-defined digital inputs, 16 digital outputs and four analog outputs via the remote interface PWB (A11A4) (see "Remote interface PWB (NAPI106)" on page 2-8). The control/interface PWB configures these inputs and outputs based on customer interface with the AUI. These inputs and outputs may be user-defined or factory defaulted (see the NX300 Installation Manual for default settings).

Digital inputs

RFI filtering is provided on all digital input lines to ensure transmitter operation is not interrupted due to RF pick up on control lines. Opto-couplers buffer/isolate the external circuits and prevent unwanted transients from affecting transmitter operation. The digital inputs on connector J24 are shifted in through shift registers U76 and U74. These values are then relayed to microcontroller U57 over the SPI bus.

Digital outputs

Shift registers U77 and U78, controlled by microcontroller U57 over the SPI bus, control the status of the digital outputs applied to connector J23. Digital output logic levels are configured through the AUI.

Analog outputs

Digital samples of the selected (or defaulted) analog outputs are applied to DAC U72 by microcontroller U57 over the SPI bus. The analog outputs of DAC U72 are applied to connector J23, via operational amplifiers U79:A through U79:D.

RF monitor circuit

Forward and reflected power samples of the transmitter's RF output are applied from the RF output filter to the *Fwd Pwr Sample* (J4-1) and *Refld Pwr Sample* (J4-7) inputs. One of these inputs, as selected by RF MON switch S5, is applied through variable gain amplifier U67, current feedback amplifier U64:A and transformer T1 to the RF MONITOR BNC output (J7). This output provides a true sample of the forward or reflected power waveform and is intended for use by a modulation monitor.

The *RF Mon Gain* signal, applied to U67 from microcontroller U57 via DAC U68 , allows for automatic adjustment of the RF MONITOR output to maintain a constant output, regardless of power level. The user can set this level using the AUI's Hardware Configuration menu. The level should automatically adjust based using the power set-point as a reference.

Digital AM exciter PWB (NAPE78A/01)

See Figure 2.1 on page 2-5. Detailed electrical schematics have not been included in this manual.

Figure 2.1: Block Diagram - Digital Exciter Block Diagram

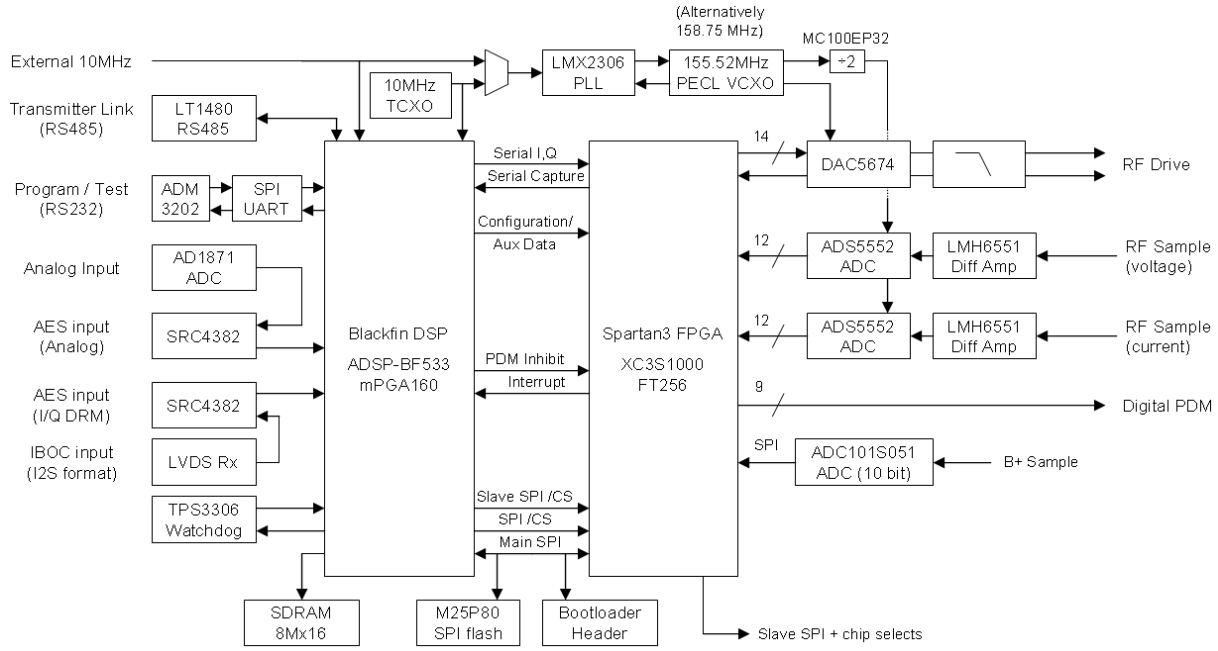

DSP

The DSP (U25) is an Analog Devices BF533 "Blackfin" IC. It provides initial data conditioning, including initial filtering and interpolation of incoming audio or digital radio data before it is applied to the FPGA. The DSP acts as the master controller for the PWB in that it provides startup configuration for the FPGA and other ICs and also performs error monitoring while the PWB is in operation.

The DSP has an external SDRAM IC (U27), which is used as a capture buffer for precorrection data and for network/spectrum analyzer purposes.

FPGA

The FPGA (U13) is a Xilinx Spartan-3 1000 IC. It performs digital up-conversion, reverse path demodulation and down-conversion, B+ voltage compensation, digital PDM generation and RF drive synthesis. It also monitors digitized samples of the RF output voltage and current and provides necessary corrections to the drive signals for amplifier and modulator non-linearities. See Figure 2.2 on page 2-6 for a block diagram of the FPGA.

Figure 2.2: Block Diagram - FPGA

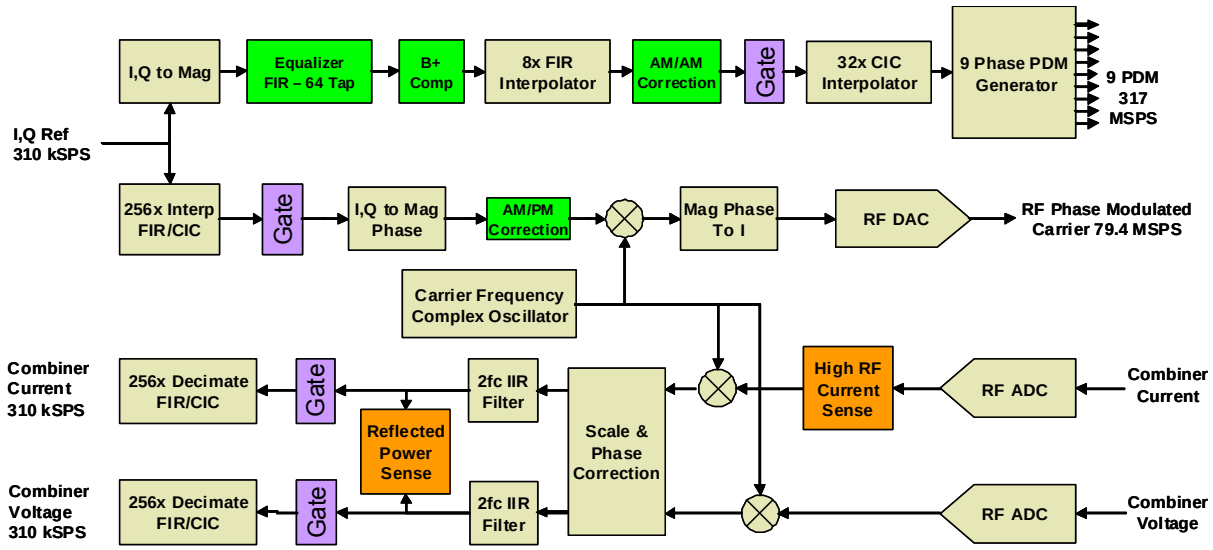

Digital PDM generator

See Figure 2.3. The FPGA generates nine modulation phases, each separately synthesized at 317 MSPS, resulting in very low quantization noise. The nine-phase process samples the modulation envelope at over 2.7 million samples per second. Distortion due to the modulation process is essentially eliminated.

Figure 2.3: 9-Phase Digital Modulation

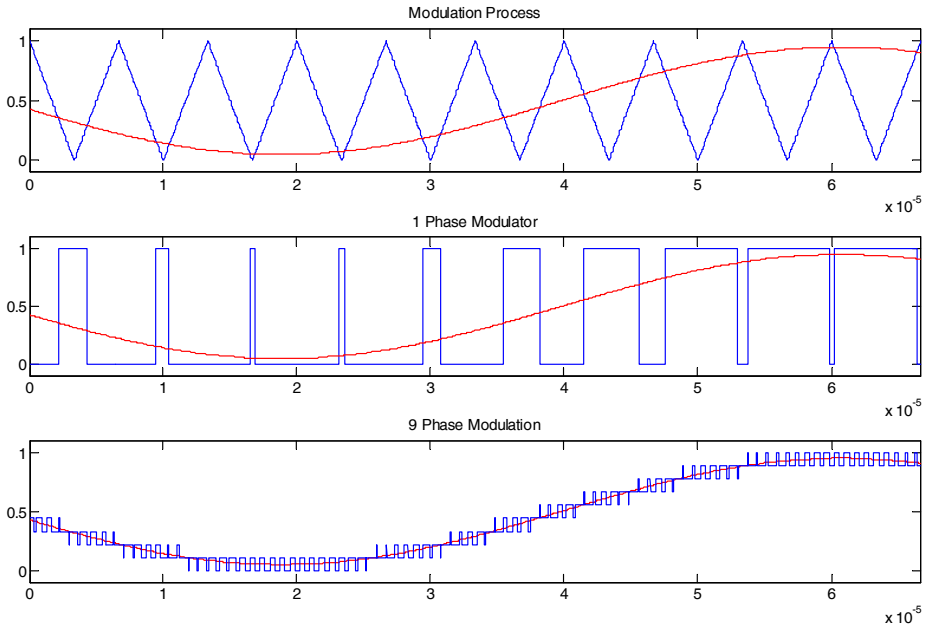

Audio and IBOC digitization

Differential analog audio is applied to J2-10 (+) and J2-22 (-). Differential line receiver U29 converts the incoming audio to a single-ended signal and ADC U35 digitizes the signal. Analog audio can also be applied - in AES/EBU format - to J2-8. In this case, SRC U23 digitizes and rate converts the incoming audio.

A second SRC (U20) accepts I/Q data in two different formats. AES/EBU format, as generated by a DRM exciter, is applied to J2-20. CMOS format, as generated by an Exgine PWB or NE IBOC generator, is applied to J2-7 (data), J2-6 (clock), and J2-19 (FS).

The digitized audio signals are applied to DSP U25 for conditioning and filtering.

RF data conversion

Synthesized RF drive data from FPGA U13 is applied to 14-bit DAC U1. U1 provides an analog RF drive output (nominally 2 V peak-to-peak) on J1-13 (+) and J1-25 (-), via isolation transformer T1. A low-pass reconstruction filter, comprised of capacitors C1 through C4 and inductors L1 through L6, removes the high frequency images present in the synthesized output signal.

Samples of the RF output voltage (J1-11) and the RF output current (J1-10) are are applied to ADCs U8 and U12, through isolation transformers T2 and T3. FPGA U13 monitors the digitized sample data from the ADCs for metering and protection purposes as well as regulating the synthesized drive outputs to maintain acceptable operating levels or to correct for amplifer and modulator non-linearity.

10 MHz sync

A 10 MHz signal can be used to synchronize (i.e., GPS lock) with the system clock. An internal 10 MHz reference is provided by VCXO oscillator U2. An external 10 MHz (J2-17) can also be applied from a user supplied source or an optional GPS sync PWB. This signal is first applied through the control/interface PWB. If supplied by the user, the external signal must be precisely 10.00 MHz and its peak-to-peak voltage (sine or square wave) must be between 2.2 V and 8.0 V.

PDM inhibit

When faults are detected or actions are initiated that may cause RF stress current thresholds to be exceeded, 0 V is applied to the *PDM Inhibit* input (J2-16). FPGA U13 inhibits the 'on time' of the PDM outputs and, in turn, the RF output of the transmitter.

RS-485 interface

Communications between the exciter and the front panel AUI are performed via an RS485 serial bus. The front panel AUI sends configuration settings for the exciter, such as operating frequency, power level and audio input. The exciter sends status and error conditions to the AUI.

Remote interface PWB (NAPI106)

See electrical schematic Figure SD-14.

The remote interface PWB (A1A11A4) performs the following functions:

- Provides an interface between the remote control/monitor facility and the transmitter.
- Provides momentary contact activation switches for each of the 16 digital inputs.
- Provides configurable status or alarm indicator LEDs for each of the 16 digital outputs.

Digital inputs

Up to 16 digital inputs can be connected to terminal blocks J7, J8 and J9. You can define these digital inputs using the advanced user interface (AUI). Each must provide a logic low input (0 V) in its active state to the associated terminal of the remote interface PWB. Momentary switches S1 (01) through S16 (16), which can be labelled according to their function, provide a means to locally activate the digital inputs.

Digital outputs

Up to 16 digital outputs can be connected to terminal blocks J3, J4 and J5. You can define these digital outputs (alarm or status) using the advanced user interface (AUI). Each provides a negative logic (current-sink-to-ground) output when a ‘true’ (alarm condition or active status) exists. The outputs provide an open collector during logic 'false' conditions (non-alarm or non-active status condition) and have no influence on the external monitoring circuit. Each monitoring circuit must present impedance between the switching device and a positive dc voltage source that results in a current flow of not more than 30 mA. A +15 V supply is available for use by the remote monitoring circuits on J2-24 or J2-25 (ground on J2-22 or J2-23). Bi-position shorting jumpers E1 through E16 allow you to connect each digital output to a STATUS (green) or ALARM (red) LED, depending on its function. The outputs can also be labelled according to their function.

RF power module (NAP39A)

See electrical schematics Figures SD-24 and SD-25.

The RF power module is effectively four wideband RF amplifiers for the AM broadcast frequency band (530 - 1710 kHz). It operates from a 400 V dc bus with a carrier output level of 2500 W and can deliver peak power levels of 13.25 kW. The module contains a three phase modulator section that feeds directly to a highly efficient class D RF amplifier. All circuitry has been integrated into a single PWB (NAPA19A Modulator/Power Amplifier PWB) eliminating the requirement for interconnect wiring between stages. This simplifies troubleshooting, and serviceability of the entire power chain.

The RF power module contains three main operating blocks, which are described in the following paragraphs:

- Modulator
- RF amplifier
- Protection/monitoring circuitry

Modulator circuit

The modulator circuit is a voltage regulating stage between the B+ voltage and RF amplifier. The modulator output will vary with any change in PDM duty cycle. The PDM duty cycle is determined by the carrier level plus the envelope information. For an envelope peak (maximum duty cycle) the modulator output will be approaching the B+ level; for an envelope trough (minimum duty cycle) the modulator output will approaching zero.

The modulator stage receives three separate PDM signals that are operating 120° out of phase from each other but with the same duty cycle. This acts to provide cancellation of the fundamental switching frequency.

PDM Inputs

The three-phase PDM signals are applied to the RF power module through the RJ45 connector (J1) at the front of the module. The PDM signals are received as differential signals and converted to TTL signals through individual RS422 receivers U1:A, U1:C and U1:D. A PDM sample is generated by summing the TTL outputs using resistors R25, R20, and R21. This sample allows for onboard monitoring of the PDM duty cycle. Each PDM signal is also fed to a FET driver IC (U12:A, U14:A and U15:A).

FET Driver

FET drivers U12:A, U14:A and U15:A are capable of switching at very high speeds and sinking/sourcing high amounts of current. These devices switch the energy required to turn the modulator power MOSFETs' gates on and off. They also contain enable circuitry that allows the PDM signals to be interrupted immediately during a fault condition. When the *Enable* input (pin 5) of each FET driver IC is held high (+15V), the driver output is enabled and a 0 to 15 V PDM signal is applied to the power MOSFET. During a fault condition, the *Enable* input is held low and the FET driver outputs will be 0 V.

The #*Mod_Drive_Enable*+ signal is common to all three modulator FET drivers and is generated by e microprocessor U22 and MOSFET Q6. When the output from the microprocessor is low (0 V), Q6 will be off causing the #*Mod_Drive_Enable*+ signal to be +15 V. When the output from the microprocessor is high (5 V), Q6 will turn on causing the #*Mod_Drive_Enable*+ signal to be low (near 0 V).

Switching Power MOSFETs

Power MOSFETs Q11, Q12, and Q13 are ground referenced power switches that turn on during the positive duty cycle of the PDM signals. The three power MOSFETs all switch based on the PDM duty cycle, but operate 120° out of phase from each other. The drain of each MOSFET switches between B+ and ground. When the MOSFET turns on it will conduct current and the drain voltage will fall to 0 V. When the MOSFET turns off it will stop conducting and the drain voltage will rise up to the B+ level. The modulator output voltage is determined by the duty cycle at which the switching MOSFETs are conducting (e.g., for a duty cycle of 42.5% and B+ of 400 V dc, the output of the modulator will be 170 V dc).

Each power MOSFET drain is connected to an individual filter inductor (L12, L13, L14) and freewheeling diode (CR19, CR20, CR21). The three inductors sum the drain currents together at a common point in the modulator filter, providing cancellation of the fundamental PDM frequency. The freewheeling diodes provide a path for current to continue to flow through the inductors when the respective MOSFET turns off, clamping the drain voltage to B+.

Modulator Filter

The modulator filter is configured as a low pass filter that will filter the fundamental PDM frequency and harmonics. The first LC filter stage is comprised of capacitor C55 and the parallel combination of inductors L12, L13, and L14. The second LC filter stage contains inductor L10/L11 and parallel RF decoupling capacitors C116 and C117.

The modulator filter's output voltage is across capacitors C116 and C117, but is not ground referenced. The output (PA voltage) applied to the RF power amplifier will be positive and is the sum of a dc component (carrier level) and an ac component (modulating source). The output voltage is related directly to the PDM positive duty cycle. If the duty cycle is constant the modulator filter output will be a dclevel. If the duty cycle is varying the modulator filter output will be a dc value plus an ac component.

Diodes CR8 and CR9 are connected in series between the modulator filter output and ground. They prevent the modulator filter output from going negative, and possible RF MOSFET damage due to overvoltage.

Modulator Current Sense

The modulator output passes through a hall effect current sensor (U17). The sensor provides a dc voltage sample that is indicative of the modulator output current. Microprocessor U22 monitors the current sample and shuts down the power module during an overcurrent event. This provides short circuit protection for the modulator circuitry.

The output of the current sensor (U17 pin 3) has a zero current offset of 0.6 V dc. Its output sensitivity is 65 mV/A.

RF power amplifier circuit

The RF power amplifier circuit contains a Class D, resonant switching amplifier. The switching MOSFET's have very low on resistance, minimizing conduction losses. This allows for very efficient operation of the amplifier. The amplifier is capable of operating from 530 to 1710 kHz into a tuned load. Different load impedances and dead times are required for different frequencies to ensure proper switching of the MOSFET's. Each MOSFET has its own gate drive circuit allowing asymmetrical drive signals to be used. This allows a dead time to be introduced between each switching cycle of the Class D amplifier.

RF Drive Inputs

The RF drive signals are applied to the RF power module through the card edge connector (P1). There are two separate signals at the desired carrier frequency: *RF Drive 1* and *RF Drive 2*. They are operating 180° out of phase with each other, with a pre-determined dead time inserted. The dead time is what allows the zero voltage resonant switching to occur within the class D amplifier. The amount of required dead time depends on many factors such as operating frequency, MOSFET device, gate drive circuit, and load current.

The balanced RF drive input signals are converted to TTL signals using RS422 receivers U27:A and U27:B. These receivers are always enabled allowing for a constant RF drive sample to be monitored by microcontroller U22.

Gate Drive Circuit

Each RF power MOSFET is driven individually by gate driver IC's U23:A, U24:A, U26:A, and U29:A. The *#RF_Drive_Enable+* is controlled by microcontroller U22 through Q5. This allows the microcontroller to perform proper shutdown sequencing during a fault condition.

The output of each driver is connected to individual gate transformers through a dc blocking capacitor and dampening resistor. A dc restoration circuit is present on the gate of each RF power MOSFET, providing the optimal turn on and turn off voltages for the MOSFET.

The dc restoration circuit consists of a storage capacitor, blocking diode, zener diode, and dc loading resistor.

Figure 2.4: Dc restoration circuit

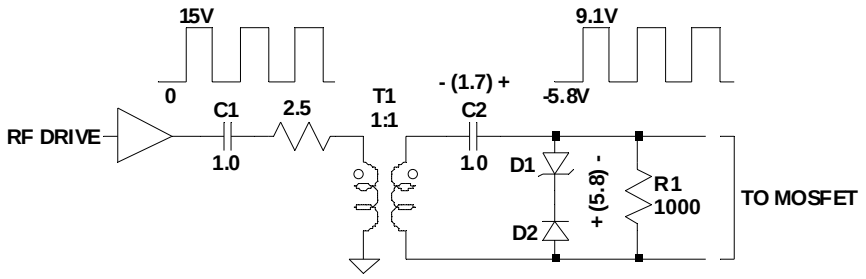

See Figure 2.4. The MOSFET driver output can be considered a square wave switching between 0 and 15 V. Initially the gate signal will switch between 0 and 15 V until a dc voltage is developed across C2. The voltage across C2 is determined by the combined clamp voltage of zener diode D1 and rectifier D2. In this case the voltage $V_{C2} = (Vcc/2) - (V_Z + V_{FD2})$.

$V_{C2} = 7.5 - (5.1 + 0.7) = 1.7$ V dc

The actual gate drive signals transition from -5.8 V to +9.1 V, ensuring proper turn on and turn off events.

RF Drive Sample and Detection

RF drive 1 and RF drive 2 are averaged together using 10 kΩ resistors R105 and R108 and capacitor C80. This allows for a slow responding, average sample for microcontroller U22. U22 monitors the sample and disables the module if the sample is lost completely, or outside the range of <30% and >50% duty cycle.

Fast RF drive loss detection is accomplished using XOR gate U25:A and comparator U18:A. The XOR gate monitors both RF drive signals and, during normal operation, delivers a short low pulse during the dead time between the two drive signals. If one of the drive signals is lost the XOR gate produces a longer pulse equal to half of the carrier period plus two dead times. This will cause the sample voltage applied to U18:A's non-inverting input below the threshold on the inverting input (2.5 V). In this case, U18:A's inverting input will switch high and latch itself on for a minimum of 332 us.

The inverting output of U18:A (*#RF_Drive_Fail+*) is applied to the *INT0* input of microcontroller U22. When this signal switches high, U22 will immediately (within 5 - 10 us) produce an interrupt to disable the module.

Power Amplifier

The class 'D' power amplifier consists of four switching devices (Q7 through Q10) arranged in an H-bridge configuration (see Figure 2.5) to produce unfiltered, modulated RF output. The switching devices are controlled such that each diagonal pair turns on simultaneously, while the second diagonal pair remains off. This creates two opposite power strokes through the load which is connected in the center of the H-bridge.

The amplifier will switch at the desired carrier frequency and generate an RF signal that varies between ± PA volts. Dc blocking capacitors are connected to one side of the bridge to ensure that dc current does not flow through the RF transformer connected to the module.

Figure 2.5: Power amplifier H-bridge

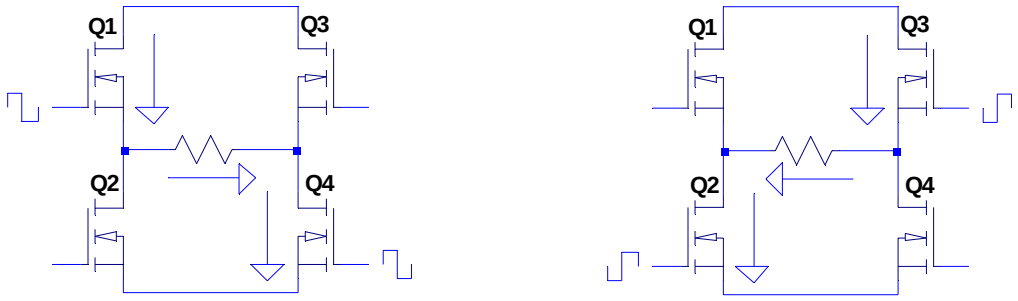

Control, Monitoring and Protection

Microprocessor U22 performs all control, monitoring, and protection services required. It monitors analog samples and alarm conditions and will report back to a rack master controller via a serial data bus. Each RF power module is programmed with a unique serial number and when inserted into a transmitter is assigned a serial address by the rack master.

CONTROL

Serial Bus: The RF power module uses the RS485 serial protocol for communication with the rack master. This allows many devices to communicate on the same serial bus without interfering with each other. Each RF power module is capable of sending status and analog sample data to the rack master for diagnosis and display purposes. Modules also receive control data from the rack master.

Microcontroller U22 sends and receives data through RS485 transceiver U20. U20 converts either the RX or TX TTL data to a balanced RS485 signal that can interface with the serial bus. U22 determines if it is transmitting or receiving data by controlling drive enable and receive enable pins (2 and 3) of U20. Typically U22 only transmits data over the serial bus when requested by the rack master.

Module Enable: A discrete enable control line is connected to each module through the front RJ45 connector (J1). The enable signal is received as a differential signal and converted to a TTL signal through RS422 receiver U1:B.

When the mating cable is unplugged from J1, the output of U1:B defaults to a high state. This places 5 V on pin 1 (*INT1*) of microprocessor U22, which causes an interrupt to occur within U22, disabling the module. An RF Power Module #: External Disable Active alarm is generated.

Mod Drive Enable: The *Mod Drive Enable* signal is a status line that is switched through Q6. It enables and disables PDM MOSFET drivers U12, U14 and U15.

RF Drive Enable: The *RF Drive Enable* signal is a status line that is switched through Q5. It enables and disables RF MOSFET drivers U23, U24, U25 and U26.

RF Relay Close and Open: The *RF Relay Close* and *RF Relay Open* lines control the RF shorting relay connected across the primary of the RF output transformer at the output of each module. The RF shorting relay is a latching relay with both an 'operate' and 'release' coil.

By default the RF shorting relay is forced into the closed position due to pullup resistor R65 on the gate of Q3. This causes Q3 to conduct current through the 'operate' coil as soon as the 5 V supply is present. During normal operation microcontroller U22 holds the gate of Q3 low, preventing it from conducting current.

During normal operation the RF shorting relay is in an open state. U22 sends out a 5 V pulse for 50 ms to the gate of Q4. This allows Q4 to conduct current through the 'release' coil causing the RF shorting relay to open its contacts. After the 50 ms pulse the gate of Q4 will return to 0 V and Q4 will stop conducting, the relay will remain latched in the open position. An RF Power Module #: RF Relay Open status event is generated.

When the module is disabled or an internal alarm occurs, U22 disables the RF drive signal and then closes the RF shorting relay by sending a 5 V 50 ms pulse to the gate of Q3. The shorting relay will be latched into the closed position, allowing the module to be removed from the transmitter.

LED Indicator: Bi-colour LED DS1 is visible from the front cover of the RF power module. Microcontroller U22 controls the light colour of DS1 by allowing Q1, Q2, or both, to conduct. Refer to the following colour codes to determine the status of the RF power module:

- green, solid: module is operating normally and producing RF power
- amber, off: module is RF off
- solid red: module has a non-latching alarm
- flashing red, then green: module is producing RF, but has an alarm
- long red, short amber: module has a latching alarm
- long red, short off: module has no valid serial number
- short red, long off: module has no valid serial address on the internal bus
- long amber, short green: module is producing RF, but no serial communications
- long amber, short red: module is not producing RF and no serial communications

Programming Header: Connector J2 is a JTAG programming header used for initially programming microcontroller U22. It is not used during normal operation.

MONITORING

Dc Current: The *Dc Current* sample from the modulator output is monitored by microcontroller U22 for diagnostic, telemetry and fault detecting purposes. The sample is monitored by two separate sections of U22.

The analog average dc current sample is detected by *ADC0* (pin 23) of U22. The dc current sample is heavily filtered through R75 and C74, minimizing current sample variations due to modulation.

Fast overcurrent conditions are detected through the use of an internal comparator of U22. The unfiltered dc current sample flows through diode CR10 and receives high frequency filtering with R91 and C91. This voltage is applied to the comparator input *AIN0* (pin 10) of U22. The comparator reference voltage is applied to *AIN1* (pin 11) of U22 and is set through resistors R84 and R85. This reference voltage should be 3.09 V dc. When the dc current sample exceeds this voltage, indicative of a peak current in excess of 53 A, an interrupt occurs within U22 and the module will be latched off immediately.

B+ Sample: The *B+ Sample* is generated by the output of a voltage divider formed with resistors R51, R52, R53 and R66. The sample is filtered through R74 and C81 and buffered through U21:A. This voltage is indicative of the B+ level applied to the module and is a nominal 3.8 V dc for a B+ level of 400 V dc. U22 monitors the analog sample through its *ADC2* input (pin 25).

PA Volts Sample: The *PA Volts Sample* is generated by the output of a voltage divider formed with resistors R59, R68, R63 and R69. The sample is filtered through R54 and C65 and buffered through U21:B. This voltage is indicative of the PA voltage applied to the modulator circuit and is a nominal 2.2 V dc for a PA voltage of 170 V dc. U22 monitors the analog sample through its input *ADC1* input (pin 24). U22 uses this sample to calculate the actual PA voltage level that is present across the RF amplifier. The value is calculated by subtracting the PA voltage sample from the B+ sample.

Modulation Sample: The *Modulation* sample is a low level dc voltage that indicates the average PDM positive duty cycle. The three PDM phases are summed together through resistors R25, R20, and R21, and form a voltage divider with R64. Capacitor C67 provides heavy filtering to minimize the sample variation due to modulation. A nominal level of 1 V dc (42.5% positive duty cycle) is applied to the *ADC3* input (pin 26) input of U22.

RF Drive Level: The *RF Drive Level* sample is a low level dc voltage that indicates the average RF drive positive duty cycle. *RF Drive 1* and *RF Drive 2* are summed together through resistors R105 and R108. A voltage divider is formed with R72. Capacitor C80 filters the RF component out of the sample. The nominal RF drive positive duty cycle is between 36 and 42%. This generate a dc voltage of between 1.3 and 1.4 V dc on the *ADC6* input (pin 19) of U22.

RF Drive Fail: The *#RF_Drive_Fail* + status line is a logic level signal that comes from the RF drive fast detection circuit. This signal is low during normal operation. In the event of an RF drive failure the output of comparator U18:A switches high (4 V). This voltage is applied to the *INT0* input (pin 32) of U22, causing an immediate interrupt to occur within the U22 The RF power module will be disabled within 10 us.

Fan Tach A and B: Each power module monitors the tachometer signals from both fans that are operating within its respective column. The fan tachometer output is an open collector output that will switch on and off in direct relation to the fan speed. Pullup resistors R88 and R73 provide switching signals from 0 to 5 V. The tachometer signals are then applied to the *T1* and *T0* timer inputs (pins 9 and 2) of U22, allowing for fan speed monitoring.

Thermistor: A thermistor is mounted directly on the RF power module heatsink. A voltage sample is generated with resistor R87 and the parallel combination of R101 and the thermistor. Resistors R87 and R101 have been selected to provide the most linear voltage response for the operating temperature range of the RF power module. The voltage sample is filtered through R79 and C72 and buffered through U21:C. The temperature sample is monitored by the *ADC7* input (pin 22) of U22. U22 disables the module if the heatsink temperature exceeds 90°C.

Analog Reference: An analog reference of 4.46 V dc is generated by a voltage divider formed by resistors R77 and R82. The dc value is buffered through U21:D and applied to the *AREF* input (pin 20) of U22. U22 uses this reference for all of its internal analog to digital converters.

Section 3: Parts Lists

Parts information

This section contains reference designation lists that provide descriptive and provisioning information for all electrical and mechanical parts that have an assigned reference designation and form a part of the subject equipment.

Family tree

Figure 3.1 on page 3-7 depicts the family tree for the subject equipment. It is based on the descending order of the reference designation hierarchy and identifies all assemblies that have an assigned Nautel configuration control number.

How to locate information about a specific part

To locate the information for a specific part, the assigned reference designation for the part must be known. In addition, the Nautel nomenclature (e.g., NAP39A) assigned to the assembly containing the part or the full reference designation, including the reference designation of all higher assemblies, must be known.

When the Nautel nomenclature is known:

- Refer to the family tree (Figure 3.1 on page 3-7) and identify the block(s) associated with the Nautel nomenclature. At the bottom of each family tree block, a reference is made to "See Part Number Index Table". Locate the part's reference designation in the identified reference designation list in this section, noting they are sorted alphanumerically.

When the reference designation is known:

- Refer to the family tree depicted in Figure 3.1 on page 3-7 with the full reference designation.
- Follow the family tree branches to the block that represents the lowest level assembly assigned a Nautel configuration control number. Then locate the part number index table for that Nautel configuration control number.
- Locate the part's reference designation in the specified table.

Reference designation lists

Individual reference designation lists are provided for:

- assemblies that are assigned an alpha-prefixed Nautel nomenclature (e.g., NAP39A)
- cable harnesses that are assigned a numbered Nautel part (e.g., 207-8504-02)
- optional kits that are assigned a numbered Nautel part

To obtain the full reference designation for a specific part the Nautel configuration control number must be located in the family tree (Figure 3.1 on page 3-7) to include the reference designation of all higher level assemblies. The reference designation lists, which are titled and presented in alphanumeric order, are divided into columns to aid in locating specific information.

Column content

The following paragraphs provide an explanation of the purpose and contents of each column in the part number indexes.

Ref des column

The 'ref des' column contains the reference designation for a specific part. These designations are assigned in accordance with the requirements of American National Standard Specification ANSI Y32.16.

Description column

This column contains the name and descriptive information for each part. The key word is presented first, followed by the adjective identifiers. When the description is 'See Family Tree for Assembly Nomenclature', the associated part is subject to its own part index table or is contained in an optional kit's list. Look up the reference designation list title (nomenclature) and the reference designation of the associated part in the family tree (Figure 3.1 on page 3-7) to determine where to locate its part information.

Nautel # column

This column contains the Nautel number assigned to each part. This number is Nautel's drawing number for Nautel manufactured parts, Nautel's configuration control number for assemblies that are under configuration control management, or Nautel's inventory management number for purchased parts. When a Nautel configuration control number (e.g. NAPC*) is referenced in this column, the associated ref des item is subject to its own part index table.

Vendor # column

This column contains an original equipment manufacturer's part number for a part. A single part number is listed for each part, even though there may be more than one known manufacturer. The listed number is Nautel's usual or preferred choice. The use of this number does not restrict Nautel from selecting and using commercial equivalents during manufacture, where their use will not degrade circuit operation or reliability.

OEM code column

This column typically contains a five digit coded group as the original equipment manufacturer's (OEM) identifier. The code was extracted from Cataloging Handbook H4/H8 Commercial and Government Entity (Cage) Code. Manufacturers that were not listed in the catalog when this listing was compiled have been assigned a unique five-letter code. This code is assigned arbitrarily and has no other significance. The manufacturers identified for parts that have JAN or MIL part numbers are Nautel's normal supply source for that part.

Note: OEM code 37338 is listed for parts manufactured by Nautel or to a Nautel control drawing. United States of America customers should refer all replacement part orders to Nautel Maine Incorporated (OEM code 57655).

OEM code to manufacturer's cross-reference

The OEM (CAGE) codes listed in the reference designation lists are representative of the original equipment manufacturers of those parts. To determine a specific part's manufacturer contact information, enter the five-character OEM (CAGE) code for that part in the following website:

https://www.bpn.gov/bincs/begin_search.asp

After entering the OEM (CAGE) code number, manufacturer pertinent information (address, telephone number, fax number, etc.) will be displayed. Please contact Nautel if a part cannot be obtained (see also "On-Line Part Quotes" in the Warranty section of this manual).

Manufacturer's index

For customers without web access, Table 3.1 provides a cross-reference from the original equipment manufacturer's (OEM) codes to the manufacturer's name. The listing is sorted alphanumerically by the OEM code.

Common abbreviations/acronyms

The following abbreviations/acronyms may appear in the *Description of Part* column:

- SMT
  Denotes item is designed to be installed using Surface Mount Technology.
- MTA
  Denotes item is a Mass Termination Assembly connector.
- SIP
  Single In-line Package
- DIP
  Dual In-line Package
- IDC
  Denotes item is an Insulation Displacement connector for ribbon cable.

Table 3.1: OEM Codes / Manufacturers

OEM Code	Manufacturer	OEM Code	Manufacturer
00779	CTS Company Incorporated	0DY74	Microsemi Corp-Power Products Grp
01295	Texas Instruments Incorporated	0FMA6	Neutrik USA Inc
01961	Pulse Engineering Inc.	0G343	Huffman Manufacturing Co.
02660	Amphenol Corp., Spectra-Strip/ITD	0GP12	Radiall Inc.
03LB0	Sandisk Corporation	0P2J5	Kingston Technology Company Inc.
04713	Motorola Incorporated	12060	Diodes Inc.
06090	Raychem Corporation	13919	Burr-Brown Corp.
07263	Fairchild Semiconductor Corp	14655	Cornell Dubilier Electronics
07933	Fairchild Semiconductor Corp	15542	Scientific Components Corp.
07EN1	Advanced Monolythic Ceramics	1AA44	Collmer Semiconductor Inc
08779	Signal Transformer Co. Inc.	1E4C5	SEI Electronics Inc.
09482	Amp of Canada Limited	1FN41	Atmel Corporation
09581	3M Canada Incorporated	1JRT7	Epson Electronics American Inc.
0A5K5	IXYS Corporation	1KK13	ITT Industries Incorporated
0AG18	Hirose Electric / USA / Inc.	1MQ07	ZRG Incorporated
0B0A9	Dallas Semiconductor Corporation	1N3T0	Semikron Inc.
0CVK3	Allegro Microsystems Inc.	1W344	United Chemi-Con Mfg Inc.

Table 3.1: OEM Codes / Manufacturers

OEM Code	Manufacturer	OEM Code	Manufacturer
22421	Thomas and Betts Limited	79942	Intel Corp Sales Office
23598	Ross Engineering Corp.	7D893	Fairchild Semiconductor Corporation
23875	M-Tron Industries Incorporated	80294	Bourns Instrument Incorporated
24355	Analog Devices Incorporated	83330	Dialight Corporation, DBA Dialight
27014	National Semiconductor Corporation	90201	Hammond Mfg. Co. Ltd.
27264	Molex Incorporated	91833	Keystone Electronics Corporation
2D829	Cornell Dubilier Electronics Corp.	91929	Honeywell Incorporated
31433	Kemet Electronics Corporation	95146	Alco Electronic Products Inc.
31781	Edac Incorporated	96095	AVX Ceramics, Div of AVX Corp
33062	Ferronics Incorporated	AMP/TYCO	Tyco Electronics Corporation
35005	Dale Electronics	ANALOG D	Analog Devices
37338	Nautel Limited	ASTEC	Astec Power
3CYG3	Sanyo Denki America Inc.	AVAGO	Avago Technologies
3DX59	Citizen America Corporation	AVX CORP	AVX Corporation
3EH09	Murata Electronics North America Inc	C3057	Conec Elektronische Bauelemente
3USB5	Startech.com USA LLP	C4751	Epcos AG
3WCG0	Ferraz Shawmut Incorporated	C & D	C & D Technologies
45496	Digital Systems	COMET	
48862	GC Electronics	Comp Corp	Components Corporation
49588	S B E Incorporated	CORNELL	See 2D829
4G927	Raychem Corporation	CREE INC	Cree Inc.
4TKQ5	UPE Inc.	ER737	Texas Instruments
54473	Matsushita Electric Corp of America	HYPERTR	Hypertronics Corporation
54583	TDK Electronics Corp.	IDT	Integrated Device Technology, Inc.
56289	Sprague Electric Company	ITT INDUS	See 1KK13
56699	BC Components	KEYSTONE	See 91833
56845	Vishay Dale Electronics Inc.	KYCON	Kycon Cable & Connector Inc.
59124	KOA Speer Electronics Inc.	LINEAR	See 64155
59993	International Rectifier Corp.	LITEON	Vishay-Liteon Power Semiconductor
5Y407	Phoenix Contact Inc.	L3845	Circuit-Test Electronics Ltd.
63590	Premier Industrial Corp.	MARKTEC	Marktech Optoelectronics
64155	Linear Technology Corporation	MICRON	Micron Technology, Inc.
65786	Cypress Semiconductor Corp.	MINI-CIRC	Mini-Circuits
71400	Cooper Bussman Inc.	MOLEX	Molex Inc.
71468	ITT Corporation	NATIONAL	See 27014
75042	TRW Incorporated	NXP SEMI	NXP Semiconductors
75915	Littelfuse World Headquarters	ON-SEMI	ON Semiconductor

Table 3.1: OEM Codes / Manufacturers

OEM Code	Manufacturer	OEM Code	Manufacturer
PANAS	Panasonic	SL575	Meanwell Sales Information
PHOENIX	See 5Y407	TDK	See 54583
SARONIX	Saronix	TEXAS	See ER737
SAW84	IEI Technology Corp.	U3040	ST Microelectronics
SB ELE	SB Electronics Incorporated	VENKEL	Venkel Ltd
SCT30	Fairchild	WANJIA	Wanjia

Figure 3.1: NX50 Family Tree

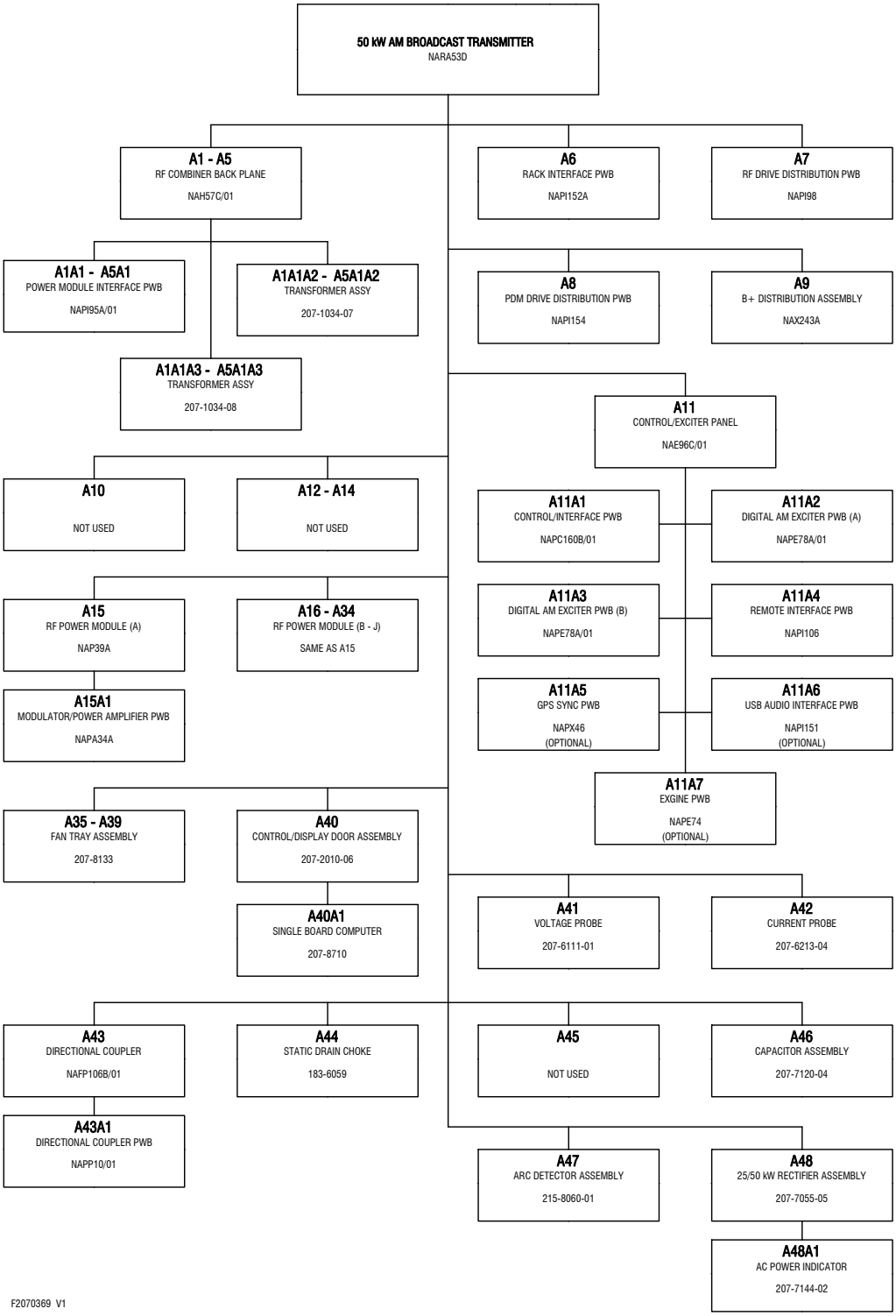

207-1034-07 Transformer Assy

REFDES	DESCRIPTION	NAUTEL #	VENDOR #	OEM CODE
K01	Relay Assy	207-1036-10	207-1036-10	37338
K02	Relay Assy	207-1036-10	207-1036-10	37338

207-1034-08 Transformer Assy

REFDES	DESCRIPTION	NAUTEL #	VENDOR #	OEM CODE
K01	Relay Assy	207-1036-10	207-1036-10	37338
K02	Relay Assy	207-1036-10	207-1036-10	37338

207-1036-10 Relay Assy

REFDES	DESCRIPTION	NAUTEL #	VENDOR #	OEM CODE
A01	Gas Discharge PWB Assy	207-6045-02	207-6045-02	37338
K01	Relay, Latching, 100A, Dbl Coil, Reverse Polarity	KA60	K100B-10-048AR-048(RoHS)	
P01	MTA, Standard Dust Cover, 4 pin	JU02	640551-4	09482
P01	MTA, Keyed Closed End Housing,4 pin,22AWG	JU27	3-644463-4(ROHS) AMP	00779

207-2010-06 Control Door Assy-NX Series

REFDES	DESCRIPTION	NAUTEL #	VENDOR #	OEM CODE
A01	SBC Assy, NX Series, RLS 3	207-8710	207-8710	37338
U04	Touchscreen Monitor Kit Assy (UR108)	206-5400-01	206-5400-01	37338

207-6045-02 Gas Discharge PWB Assy

REFDES	DESCRIPTION	NAUTEL #	VENDOR #	OEM CODE
U01	Gas Discharge Tube, 600V, Fail Short	UM98	SL1024A600RF(RoHS)	75915

207-6111-01 Voltage Probe Assy, NX50

REFDES	DESCRIPTION	NAUTEL #	VENDOR #	OEM CODE
C01	Capacitor, Dipped Mica, 15000pF 2PC 500V	CD39	CM07FD153G03	14655
C02	Capacitor, Dipped Mica, 15000pF 2PC 500V	CD39	CM07FD153G03	14655
J01	Conn, Coax, BNC, Recept, 50ohm	JDP26	UG1094/U	02660

207-6213-04 DO NOT USE - SEE NOTESCurrent Probe-NX25, 50,100,200

REFDES	DESCRIPTION	NAUTEL #	VENDOR #	OEM CODE
J01	Conn, Coax, BNC, Recept, 50ohm, Insul	JT05	31-10	02660
J02	Not Used	-	NOT USED	37338
P01	Conn, Coax, BNC, Plug, 50ohm,Crimp	JDP24	225395-7	09482
R01	Resistor, Film, 39 Ohms, 5% 2W	RBP36	GS-3, 39 OHMS	75042
R02	Resistor, Film, 47 Ohms, 5% 2W	RBP05	GS-3, 47 OHMS	75042
R03	Resistor, Film, 100 Ohms, 5%2W	RBP07	GS-3, 100 OHMS	75042
R04	Resistor, Film, 100 Ohms, 5%2W	RBP07	GS-3, 100 OHMS	75042
T01	Transducer, Current, 0.1V/A,150Arms max, Isolated, Unpaint	UC89	CM-10-LI-U	31283

207-7055-05 25/50KW Rectifier Assy

REFDES	DESCRIPTION	NAUTEL #	VENDOR #	OEM CODE
A01	AC Power Indicator Assy,NX25/50	207-7144-02	207-7144-02	37338
C01	Capacitor, Non-Polarized, 10uf, +/-20%, 35V	CS68	NNR100M35V5X11	NICCOMP
C02	Capacitor, Ceramic, 0.1uF 10%100V	CCG07	CKR06BX104KRV	56289
U01	Rectifier, (BeO), SCR, 3-PH,400VDC, 250A	UR92	30655268	

207-7120-04 Capacitor Assy-NX50 RLS 3 & 4

REFDES	DESCRIPTION	NAUTEL #	VENDOR #	OEM CODE
C01	Capacitor,Elect.,10,000uf,450Vdc	CT54	3186GN103T450MPA1	14655
C02	Capacitor,Elect.,10,000uf,450Vdc	CT54	3186GN103T450MPA1	14655
C03	Capacitor,Elect.,10,000uf,450Vdc	CT54	3186GN103T450MPA1	14655
C04	Capacitor,Elect.,10,000uf,450Vdc	CT54	3186GN103T450MPA1	14655
C05	Capacitor,Elect.,10,000uf,450Vdc	CT54	3186GN103T450MPA1	14655
C06	Capacitor,Elect.,10,000uf,450Vdc	CT54	3186GN103T450MPA1	14655
K01	Discharge Relay Assy	207-8611-01	207-8611-01	37338
R01	Installed at Next Higher Assy	+	INSTALLED AT NEXT HIGHER ASSY	37338
R02	Installed at Next Higher Assy	+	INSTALLED AT NEXT HIGHER ASSY	37338
R03	Installed at Next Higher Assy	+	INSTALLED AT NEXT HIGHER ASSY	37338
R04	Installed at Next Higher Assy	+	INSTALLED AT NEXT HIGHER ASSY	37338
R05	Installed at Next Higher Assy	+	INSTALLED AT NEXT HIGHER ASSY	37338
R06	Installed at Next Higher Assy	+	INSTALLED AT NEXT HIGHER ASSY	37338
R07	Resistor, Wirewound, HL, 50 ohms/350W/5% c/w mt fixture	RX53	DQR-F 350W 50 ohms	
U08	Rect/Assy, Bridge, 800V, 35A	UF28	GBPC3508	LITEON
U09	Rect/Assy, Bridge, 800V, 35A	UF28	GBPC3508	LITEON
U10	Rect/Assy, Bridge, 800V, 35A	UF28	GBPC3508	LITEON

207-7144-02 AC Power Indicator Assy,NX25/50

REFDES	DESCRIPTION	NAUTEL #	VENDOR #	OEM CODE
DS01	LED, Pilot Light, Amber, 230Vac	BAP44	LEDTECA220AC	
DS02	LED, Pilot Light, Amber, 230Vac	BAP44	LEDTECA220AC	
DS03	LED, Pilot Light, Amber, 230Vac	BAP44	LEDTECA220AC	
DS04	LED, Pilot Light, Amber, 230Vac	BAP44	LEDTECA220AC	
DS05	LED, Pilot Light, Amber, 230Vac	BAP44	LEDTECA220AC	
DS06	LED, Pilot Light, Amber, 230Vac	BAP44	LEDTECA220AC	
J01	Conn, Mate-N-Lok, Cap, 4,600V/36A, .250" Centerline	JT115	1-480703-0(RoHS)	L2433
J01	Conn, Contact, Socket, 18-14,Mate-N-Lock	JT46	350919-3	00779

207-8133 NX Fan Tray Assy

REFDES	DESCRIPTION	NAUTEL #	VENDOR #	OEM CODE
B01	Fan,6.75"x2',48V@1.04A350CFM, Tach	ZAP37	109E5748C503(RoHS) SANYO DENKI AMERICA INC	3CYG3
B02	Fan,6.75"x2',48V@1.04A350CFM, Tach	ZAP37	109E5748C503(RoHS) SANYO DENKI AMERICA INC	3CYG3
E01	Connector, Quick-Dis, M,1/4 Tab	HAM06	2-520103-2	09482
E02	Connector, Quick-Dis, M,1/4 Tab	HAM06	2-520103-2	09482
E03	Connector, Quick-Dis, M,1/4 Tab	HAM06	2-520103-2	09482
E04	Connector, Quick-Dis, M,1/4 Tab	HAM06	2-520103-2	09482
E05	Connector, Quick-Dis, M,1/4 Tab	HAM06	2-520103-2	09482
E06	Connector, Quick-Dis, M,1/4 Tab	HAM06	2-520103-2	09482
J01	Conn, Plug, D-Sub, 9 pin	JR28	205204-1	09482
J01	Conn, Lock Screw, D-Sub, Female	JS32	D110551	71468

207-8504-03 Cableform, Main, NX50

REFDES	DESCRIPTION	NAUTEL #	VENDOR #	OEM CODE
CR01	Not Used	-	NOT USED	37338
E01	Lug, Crimp, Joint, Butt,16-14 AWG, Blue	HAR29	320562	09482
E02	Lug, Crimp, Joint, Butt,16-14 AWG, Blue	HAR29	320562	09482
E03	Conn,Quick-Dis,F,1/4 Tab 14-16Shrink	HAM69	B-106-3632	06090
E04	Conn,Quick-Dis,F,1/4 Tab 14-16Shrink	HAM69	B-106-3632	06090
E05	Not Used	-	NOT USED	37338
P01	Conn, Socket, D-Sub, 9 pin	JR27	205203-1	09482
P01	Conn, Lock Screw, D-Sub, Male	JT16	205980-1	09482
P02	Conn, Socket, D-Sub, 9 pin	JR27	205203-1	09482
P02	Conn, Lock Screw, D-Sub, Male	JT16	205980-1	09482
P03	Conn, Socket, D-Sub, 9 pin	JR27	205203-1	09482
P03	Conn, Lock Screw, D-Sub, Male	JT16	205980-1	09482
P04	Conn, Socket, D-Sub, 9 pin	JR27	205203-1	09482
P04	Conn, Lock Screw, D-Sub, Male	JT16	205980-1	09482
P05	Conn, Socket, D-Sub, 9 pin	JR27	205203-1	09482
P05	Conn, Lock Screw, D-Sub, Male	JT16	205980-1	09482
P06	Conn, Plug, D-Sub, 25 pin, HDP-20	JR39	205208-1	09482
P06	Conn, Lock Screw, D-Sub, Male	JT16	205980-1	09482
P07	Conn, Plug, D-Sub, 25 pin, HDP-20	JR39	205208-1	09482
P07	Conn, Lock Screw, D-Sub, Male	JT16	205980-1	09482
P08	Conn, Plug, D-Sub, 25 pin, HDP-20	JR39	205208-1	09482
P08	Conn, Lock Screw, D-Sub, Male	JT16	205980-1	09482
P09	Conn, Socket, D-Sub, HDP-20, 25 pin	JR38	205207-1	09482
P09	Conn, Lock Screw, D-Sub, Male	JT16	205980-1	09482
P10	Conn, Plug, D-Sub, 9 pin	JR28	205204-1	09482
P10	Conn, Lock Screw, D-Sub, Male	JT16	205980-1	09482
P11	Conn, Socket, D-Sub, HDP-20, 25 pin	JR38	205207-1	09482
P11	Conn, Lock Screw, D-Sub, Male	JT16	205980-1	09482
P12	Connector,Plug,2 P,Socket,66A,600V, 10.16mm	JT94	1967375	PHOENIX
P13	Connector,Plug,2 P,Socket,66A,600V, 10.16mm	JT94	1967375	PHOENIX
P14	Conn, Socket, D-Sub, HDP-20, 25 pin	JR38	205207-1	09482
P14	Conn, Lock Screw, D-Sub, Male	JT16	205980-1	09482
P15	Conn, Socket, D-Sub, 9 pin	JR27	205203-1	09482
P15	Conn, Lock Screw, D-Sub, Male	JT16	205980-1	09482
P16	Conn,Socket,4-Pin,24-28 AWG	JT53	22-50-3045	27264
P17	Conn, Socket, D-Sub, 9 pin	JR27	205203-1	09482
P17	Conn, Lock Screw, D-Sub, Male	JT16	205980-1	09482
P18	Conn,Socket,4-Pin,24-28 AWG	JT53	22-50-3045	27264
P19	Conn, HRS, DF11, 2mm, DualSocket 6, Crimp	JU56	DF11-6DS-2C	0AG18

Continued from previous page

207-8504-03 Cableform, Main, NX50

REFDES	DESCRIPTION	NAUTEL #	VENDOR #	OEM CODE
P20	Not Used	-	NOT USED	37338
P21	Not Used	-	NOT USED	37338
P22	Conn, HRS, DF11, 2mm, DualSocket 6, Crimp	JU56	DF11-6DS-2C	0AG18
P23	Conn, Coax, BNC, Plug, 50ohm,Crimp	JDP24	225395-7	09482
P24	Conn, Coax, BNC, Plug, 50ohm,Crimp	JDP24	225395-7	09482
P25	Conn, HRS, DF11, 2mm, DualSocket 6, Crimp	JU56	DF11-6DS-2C	0AG18
P26	Conn, HRS, DF11, 2mm, DualSocket 6, Crimp	JU56	DF11-6DS-2C	0AG18
P27	Conn, Plug, D-Sub, 9 pin	JR28	205204-1	09482
P27	Conn, Lock Screw, D-Sub, Male	JT16	205980-1	09482
P28	Conn, Coax, BNC, Plug, 50ohm,Crimp	JDP24	225395-7	09482
P29	Not Used	-	NOT USED	37338
P30	Conn, Recept, Mini-Fit dualrow, 4-pin	JP59	39-01-2045	MOLEX
P31	Not Used	-	NOT USED	37338
P32	Not Used	-	NOT USED	37338
P33	Conn, Housing, Dual Row, 8 pin, .100 Grid	JU72	104482-3(RoHS)	
P33	Conn, Socket for JU72, 22-26AWG, 15AU Crimp	JU73	1-104480-5(RoHS)	
P35	Conn, Mate-N-Lok, Plug, 2,600V/36A, .250" Centerline	JT116	1-480702-0(RoHS)	L2433
P35	Conn, Contact, Pin,18-14MATE-N-LOK	JT66	350918-3	00779
W61	Cable, Ethernet, 67", Shld, Black, 28AWG, 80degC, with guard	UA214	PCF-S67I-UA214G(RoHS)	
W62	Cable, Ethernet, 67", Shld, Black, 28AWG, 80degC, with guard	UA214	PCF-S67I-UA214G(RoHS)	
W64	Cable, Ethernet,80", Shld, Black, 28AWG, 80degC, with guard	UA205	PCF-S80I-UA205G(RoHS)	
W65	Cable 6ft, 18AWG, Plug Ø 2.1mm/5.5mm	UB75	310-920	L3845
W66	Cable, 6 ft.,9-pin D-Sub,M/F,Straight-Through	UA82	MXT100	3USB5
W67	Cable, 6 ft.,9-pin D-Sub,M/F,Straight-Through	UA82	MXT100	3USB5
W69	RS232 Cable 2Ft, DB25(M) toDB25(F)	JN49	45-0358-0000	48862
W70	RS232 Cable 2Ft, DB25(M) toDB25(F)	JN49	45-0358-0000	48862

207-8508-01 Cableform, RF NX50 (RLS 3)

REFDES	DESCRIPTION	NAUTEL #	VENDOR #	OEM CODE
W21	Cable, Ethernet, 56", Shld, Black, 28AWG, 80degC, with guard	UA203	PCF-S56I-UA203G(RoHS)	
W22	Cable, Ethernet, 43", Shld, Black, 28AWG, 80degC, with guard	UA213	PCF-S43I-UA213G(RoHS)	
W23	Cable, Ethernet, 67", Shld, Black, 28AWG, 80degC, with guard	UA214	PCF-S67I-UA214G(RoHS)	
W24	Cable, Ethernet, 52", Shld, Black, 28AWG, 80degC, with guard	UA226	PCF-S52I-UA226G(RoHS)	
W25	Cable, Ethernet, 70", Shld, Black, 28AWG, 80degC, with guard	UA201	PCF-S70I-UA201G(RoHS)	
W26	Cable, Ethernet, 56", Shld, Black, 28AWG, 80degC, with guard	UA203	PCF-S56I-UA203G(RoHS)	
W27	Cable, Ethernet, 70", Shld, Black, 28AWG, 80degC, with guard	UA201	PCF-S70I-UA201G(RoHS)	
W28	Cable, Ethernet, 56", Shld, Black, 28AWG, 80degC, with guard	UA203	PCF-S56I-UA203G(RoHS)	
W29	Cable, Ethernet, 56", Shld, Black, 28AWG, 80degC, with guard	UA203	PCF-S56I-UA203G(RoHS)	
W30	Cable, Ethernet, 56", Shld, Black, 28AWG, 80degC, with guard	UA203	PCF-S56I-UA203G(RoHS)	

207-8509-02 Cableform, PDM NX50 (RLS 3)

REFDES	DESCRIPTION	NAUTEL #	VENDOR #	OEM CODE
W01	Cable, Ethernet, 40", Shld, Black, 28AWG, 80degC, with guard	UA200	PCF-S40I-UA200G(RoHS)	
W02	Cable, Ethernet, 33", Shld, Black, 28AWG, 80degC, with guard	UA212	PCF-S33I-UA212G(RoHS)	
W03	Cable, Ethernet, 28", Shld, Black, 28AWG, 80degC, with guard	UA199	PCF-S28I-UA199G(RoHS)	
W04	Cable, Ethernet, 21", Shld, Black, 28AWG, 80degC, with guard	UA198	PCF-S21I-UA198G(RoHS)	
W05	Cable, Ethernet, 33", Shld, Black, 28AWG, 80degC, with guard	UA212	PCF-S33I-UA212G(RoHS)	
W06	Cable, Ethernet, 25", Shld, Black, 28AWG, 80degC, with guard	UA227	PCF-S25I-UA227G(RoHS)	
W07	Cable, Ethernet, 25", Shld, Black, 28AWG, 80degC, with guard	UA227	PCF-S25I-UA227G(RoHS)	
W08	Cable, Ethernet, 18", Shld, Black, 28AWG, 80degC, with guard	UA228	PCF-S18I-UA228G(RoHS)	
W09	Cable, Ethernet, 33", Shld, Black, 28AWG, 80degC, with guard	UA212	PCF-S33I-UA212G(RoHS)	
W10	Cable, Ethernet, 25", Shld, Black, 28AWG, 80degC, with guard	UA227	PCF-S25I-UA227G(RoHS)	
W11	Cable, Ethernet, 25", Shld, Black, 28AWG, 80degC, with guard	UA227	PCF-S25I-UA227G(RoHS)	
W12	Cable, Ethernet, 18", Shld, Black, 28AWG, 80degC, with guard	UA228	PCF-S18I-UA228G(RoHS)	
W13	Cable, Ethernet, 28", Shld, Black, 28AWG, 80degC, with guard	UA199	PCF-S28I-UA199G(RoHS)	
W14	Cable, Ethernet, 21", Shld, Black, 28AWG, 80degC, with guard	UA198	PCF-S21I-UA198G(RoHS)	
W15	Cable, Ethernet, 28", Shld, Black, 28AWG, 80degC, with guard	UA199	PCF-S28I-UA199G(RoHS)	
W16	Cable, Ethernet, 21", Shld, Black, 28AWG, 80degC, with guard	UA198	PCF-S21I-UA198G(RoHS)	
W17	Cable, Ethernet, 28", Shld, Black, 28AWG, 80degC, with guard	UA199	PCF-S28I-UA199G(RoHS)	
W18	Cable, Ethernet, 21", Shld, Black, 28AWG, 80degC, with guard	UA198	PCF-S21I-UA198G(RoHS)	
W19	Cable, Ethernet, 36", Shld, Black, 28AWG, 80degC, with guard	UA204	PCF-S36I-UA204G(RoHS)	
W20	Cable, Ethernet, 28", Shld, Black, 28AWG, 80degC, with guard	UA199	PCF-S28I-UA199G(RoHS)	

207-8611-01 Discharge Relay Assy

REFDES	DESCRIPTION	NAUTEL #	VENDOR #	OEM CODE
K01	Relay, 12KV, NC, 180V, AUX SW, Ext Range	KC76	E12-NC-12-1T-181-NAU	

207-8710 SBC Assy, NX Series, RLS 3

REFDES	DESCRIPTION	NAUTEL #	VENDOR #	OEM CODE
B01	Fan, Intel ATOM CPU, 12V, 90mA	ZAP55	31100-000327-RS(RoHS)	SAW84
U01	Motherboard, EPIC, ATOM D525,12V	UB97	NANO-PV-D5251-R10(STATIC)(RoHS)IEI	SAW84
U02	Not Used	-	NOT USED	37338
U03	Memory, 2G, DDR3. 1333MHz,SODIMM	UX145	KVR1333D3S9/2G(RoHS)	0P2J5
U04	Not Used	-	NOT USED	37338
U05	Memory, Compact Flash Card,4GB	UB76	SDCFH-004G-A11(STATIC) SanDisk Corporation	03LB0

215-8060-01 Arc Detector Assy

REFDES	DESCRIPTION	NAUTEL #	VENDOR #	OEM CODE
U01	Board, UV TRON DRVR Pwb, PS 12-24Vdc, Out OC 10ms	UB88	C10423-04(STATIC)	OJXJ4
U01CX	Capacitor, Tantalum, Epoxy, 1uF 10% 35V	CCF06	T351A105K035AT(RoHS) KEMET	56289
U01J1	Header, 4-pin, Square, Pol,0.1", Rt Angle, PCB mount	JT157	22053041	13150
U02	Installed at Next Higher Assy	+	INSTALLED AT NEXT HIGHER ASSY	37338

NAE96C/01 Control/Exciter Panel Assy.NX25-NX100

REFDES	DESCRIPTION	NAUTEL #	VENDOR #	OEM CODE
A01	Control/Interface PWB Assy, NXSeries	NAPC160B/01	207-3030-04	37338
A02	Digital AM Exciter PWB Assy	NAPE78A/01	207-3050-03	37338
A03	Digital AM Exciter PWB Assy	NAPE78A/01	207-3050-03	37338
A04	Remote Interface PWB Assy	NAPI106	207-3040	37338
A05	See Sales Order	%	% SEE SALES ORDER	37338
A06	See Sales Order	%	% SEE SALES ORDER	37338
A07	See Sales Order	%	% SEE SALES ORDER	37338

NAFP106B/01 Directional Coupler (FWD/REFLPWR) for NX50

REFDES	DESCRIPTION	NAUTEL #	VENDOR #	OEM CODE
A01	Directional Coupler PWB Assy,NX50	NAPP10/01	207-6280-06	37338
C01	Capacitor, Ceramic, 50pF +10%15000V	CCG42	T500K99COGW8570	56699
T01	Transformer Current Assy	207-6052-01	207-6052-01	37338

NAH57C/01 Back Plane, RF Combiner(TOP < --)

REFDES	DESCRIPTION	NAUTEL #	VENDOR #	OEM CODE
A01	Power Module Interface PWB	NAPI95A/01	207-1040-04	37338
A02	Transformer Assy	207-1034-07	207-1034-07	37338
A03	Transformer Assy	207-1034-08	207-1034-08	37338

NAP39A RF Power Module Assy,NX Series

REFDES	DESCRIPTION	NAUTEL #	VENDOR #	OEM CODE
A01	Modulator/RF Amplifier PWBAssy, NX Series	NAPA34A	207-1150-01	37338
Q07	Transistor, FET, N Channel, 500V, 0.05ohm fast	QR68	APT50m50JFLL(Static)	
Q08	Transistor, FET, N Channel, 500V, 0.05ohm fast	QR68	APT50m50JFLL(Static)	
Q09	Transistor, FET, N Channel, 500V, 0.05ohm fast	QR68	APT50m50JFLL(Static)	
Q10	Transistor, FET, N Channel, 500V, 0.05ohm fast	QR68	APT50m50JFLL(Static)	
R01	Thermistor,-30/105ºC,10Kohms@25ºC,Neg,Bvalue 3435K	RX49	EC2F103A2-07U002	

REFDES	DESCRIPTION	NAUTEL #	VENDOR #	OEM CODE
C001	Cap,SMT,Ceramic,0.1uF,10%,50V,X7R,0805	CCFS07	C0805C104K5RAC	31433
C002	Cap,SMT,Ceramic,1uF,10%,100V,X7R,1210	CCFS60	12101C105KAT2A(RO HS)	AVX CORP
C003	Not Used	-	NOT USED	37338
C004	Not Used	-	NOT USED	37338
C005	Cap,SMT,Tantalum,10uF,10%,35V,2917	CTFS03	T494D106K035AS	31433
C006	Cap,SMT,Ceramic,0.1uF,10%,50V,X7R,0805	CCFS07	C0805C104K5RAC	31433
C007	Cap,SMT,Ceramic,0.1uF,10%,50V,X7R,0805	CCFS07	C0805C104K5RAC	31433
C008	Cap,SMT,Ceramic,0.1uF,10%,50V,X7R,0805	CCFS07	C0805C104K5RAC	31433
C009	Cap,SMT,Ceramic,1uF,10%,100V,X7R,1210	CCFS60	12101C105KAT2A(RO HS)	AVX CORP
C010	Cap,SMT,Ceramic,1uF,10%,100V,X7R,1210	CCFS60	12101C105KAT2A(RO HS)	AVX CORP
C011	Cap,SMT,Ceramic,0.1uF,10%,50V,X7R,0805	CCFS07	C0805C104K5RAC	31433
C012	Cap,SMT,Ceramic,0.1uF,10%,50V,X7R,0805	CCFS07	C0805C104K5RAC	31433
C013	Cap,SMT,Ceramic,0.1uF,10%,50V,X7R,0805	CCFS07	C0805C104K5RAC	31433
C014	Cap,SMT,Ceramic,0.1uF,10%,50V,X7R,0805	CCFS07	C0805C104K5RAC	31433
C015	Cap,SMT,Ceramic,1uF,10%,100V,X7R,1210	CCFS60	12101C105KAT2A(RO HS)	AVX CORP
C016	Cap,SMT,Tantalum,10uF,10%,35V,2917	CTFS03	T494D106K035AS	31433
C017	Cap,SMT,Ceramic,0.1uF,10%,50V,X7R,0805	CCFS07	C0805C104K5RAC	31433
C018	Cap,SMT,Ceramic,0.1uF,10%,50V,X7R,0805	CCFS07	C0805C104K5RAC	31433
C019	Cap,SMT,Ceramic,1uF,10%,100V,X7R,1210	CCFS60	12101C105KAT2A(RO HS)	AVX CORP
C020	Cap,SMT,Ceramic,1uF,10%,100V,X7R,1210	CCFS60	12101C105KAT2A(RO HS)	AVX CORP
C021	Cap,SMT,Tantalum,10uF,10%,35V,2917	CTFS03	T494D106K035AS	31433
C022	Cap,SMT,Ceramic,0.1uF,10%,50V,X7R,0805	CCFS07	C0805C104K5RAC	31433
C023	Cap,SMT,Ceramic,1uF,10%,100V,X7R,1210	CCFS60	12101C105KAT2A(RO HS)	AVX CORP
C024	Cap,SMT,Ceramic,1uF,10%,100V,X7R,1210	CCFS60	12101C105KAT2A(RO HS)	AVX CORP
C025	Cap,SMT,Tantalum,10uF,10%,35V,2917	CTFS03	T494D106K035AS	31433
C026	Cap,SMT,Ceramic,0.1uF,10%,50V,X7R,0805	CCFS07	C0805C104K5RAC	31433
C027	Cap,SMT,Ceramic,0.1uF,10%,50V,X7R,0805	CCFS07	C0805C104K5RAC	31433
C028	Cap,SMT,Ceramic,1uF,10%,100V,X7R,1210	CCFS60	12101C105KAT2A(RO HS)	AVX CORP
C029	Cap,SMT,Ceramic,1uF,10%,100V,X7R,1210	CCFS60	12101C105KAT2A(RO HS)	AVX CORP
C030	Cap, SMT, Ceramic, 0.1uF, 10%25V X7R, 0603	CCFS52	C0603C104K3RAC	31433
C031	Cap, SMT, Ceramic, 0.1uF, 10%25V X7R, 0603	CCFS52	C0603C104K3RAC	31433
C032	Cap, SMT, Ceramic, 0.1uF, 10%25V X7R, 0603	CCFS52	C0603C104K3RAC	31433
C033	Cap, SMT, Ceramic, 0.1uF, 10%25V X7R, 0603	CCFS52	C0603C104K3RAC	31433
C034	Cap, SMT, Ceramic, 0.1uF, 10%25V X7R, 0603	CCFS52	C0603C104K3RAC	31433

Continued from previous page

REFDES	DESCRIPTION	NAUTEL #	VENDOR #	OEM CODE
C035	Not Used	-	NOT USED	37338
C036	Not Used	-	NOT USED	37338
C037	Not Used	-	NOT USED	37338
C038	Not Used	-	NOT USED	37338
C039	Not Used	-	NOT USED	37338
C040	Capacitor,Polyprop,0.15uF,5%,600V	CP31	715P15456MA3	49588
C041	Capacitor,Polyprop,0.15uF,5%,600V	CP31	715P15456MA3	49588
C042	Not Used	-	NOT USED	37338
C043	Not Used	-	NOT USED	37338
C044	Cap,SMT,Ceramic,0.1uF,10%,50V,X7R,0805	CCFS07	C0805C104K5RAC	31433
C045	Not Used	-	NOT USED	37338
C046	Not Used	-	NOT USED	37338
C047	Not Used	-	NOT USED	37338
C048	Not Used	-	NOT USED	37338
C049	Cap,SMT,Ceramic,0.1uF,10%,50V,X7R,0805	CCFS07	C0805C104K5RAC	31433
C050	Cap,SMT,Ceramic,1uF,10%,100V,X7R,1210	CCFS60	12101C105KAT2A(ROHS)	AVX CORP
C051	Capacitor,Polyprop,0.15uF,5%,600V	CP31	715P15456MA3	49588
C052	Not Used	-	NOT USED	37338
C053	Not Used	-	NOT USED	37338
C054	Not Used	-	NOT USED	37338
C055	Capacitor,Polyprop,0.15uF,5%,600V	CP31	715P15456MA3	49588
C056	Not Used	-	NOT USED	37338
C057	Cap,SMT,Ceramic,1uF,10%,100V,X7R,1210	CCFS60	12101C105KAT2A(ROHS)	AVX CORP
C058	Cap,SMT,Ceramic,0.1uF,10%,50V,X7R,0805	CCFS07	C0805C104K5RAC	31433
C059	Cap,SMT,Ceramic,0.001uF,10%,50V,X7R,0603	CCFS01	C0603C102K5RAC	31433
C060	Cap,SMT,Ceramic,0.001uF,10%,50V,X7R,0603	CCFS01	C0603C102K5RAC	31433
C061	Cap,SMT,Ceramic,0.1uF,10%,50V,X7R,0805	CCFS07	C0805C104K5RAC	31433
C062	Cap,SMT,Ceramic,0.1uF,10%,50V,X7R,0805	CCFS07	C0805C104K5RAC	31433
C063	Not Used	-	NOT USED	37338
C064	Not Used	-	NOT USED	37338
C065	Cap,SMT,Ceramic,1uF,10%,100V,X7R,1210	CCFS60	12101C105KAT2A(ROHS)	AVX CORP
C066	Cap,SMT,Ceramic,0.1uF,10%,50V,X7R,0805	CCFS07	C0805C104K5RAC	31433
C067	Cap,SMT,Ceramic,1uF,10%,100V,X7R,1210	CCFS60	12101C105KAT2A(ROHS)	AVX CORP
C068	Cap,SMT,Ceramic,0.1uF,10%,50V,X7R,0805	CCFS07	C0805C104K5RAC	31433
C069	Cap,SMT,Ceramic,0.1uF,10%,50V,X7R,0805	CCFS07	C0805C104K5RAC	31433
C070	Cap,SMT,Ceramic,1uF,10%,100V,X7R,1210	CCFS60	12101C105KAT2A(ROHS)	AVX CORP

Continued from previous page

REFDES	DESCRIPTION	NAUTEL #	VENDOR #	OEM CODE
C071	Cap,SMT,Ceramic,1uF,10%,100V,X7R,1210	CCFS60	12101C105KAT2A(ROHS)	AVX CORP
C072	Cap,SMT,Ceramic,0.1uF,10%,50V,X7R,0805	CCFS07	C0805C104K5RAC	31433
C073	Cap,SMT,Ceramic,1uF,10%,100V,X7R,1210	CCFS60	12101C105KAT2A(ROHS)	AVX CORP
C074	Cap,SMT,Ceramic,1uF,10%,100V,X7R,1210	CCFS60	12101C105KAT2A(ROHS)	AVX CORP
C075	Cap,SMT,Ceramic,0.1uF,10%,50V,X7R,0805	CCFS07	C0805C104K5RAC	31433
C076	Cap,SMT,Ceramic,1uF,10%,100V,X7R,1210	CCFS60	12101C105KAT2A(ROHS)	AVX CORP
C077	Cap,SMT,Ceramic,1uF,10%,100V,X7R,1210	CCFS60	12101C105KAT2A(ROHS)	AVX CORP
C078	Cap,SMT,Ceramic,0.1uF,10%,50V,X7R,0805	CCFS07	C0805C104K5RAC	31433
C079	Cap,SMT,Ceramic,1uF,10%,100V,X7R,1210	CCFS60	12101C105KAT2A(ROHS)	AVX CORP
C080	Cap,SMT,Ceramic,0.1uF,10%,50V,X7R,0805	CCFS07	C0805C104K5RAC	31433
C081	Cap,SMT,Ceramic,1uF,10%,100V,X7R,1210	CCFS60	12101C105KAT2A(ROHS)	AVX CORP
C082	Cap,SMT,Ceramic,0.1uF,10%,50V,X7R,0805	CCFS07	C0805C104K5RAC	31433
C083	Cap,SMT,Ceramic,0.1uF,10%,50V,X7R,0805	CCFS07	C0805C104K5RAC	31433
C084	Cap,SMT,Ceramic,0.1uF,10%,50V,X7R,0805	CCFS07	C0805C104K5RAC	31433
C085	Cap,SMT,Ceramic,18pF,2%,50V,C0G,0603	CCFS23	C0603C180G5GAC	31433
C086	Cap,SMT,Ceramic,0.1uF,10%,50V,X7R,0805	CCFS07	C0805C104K5RAC	31433
C087	Cap,SMT,Ceramic,18pF,2%,50V,C0G,0603	CCFS23	C0603C180G5GAC	31433
C088	Cap,SMT,Ceramic,0.1uF,10%,50V,X7R,0805	CCFS07	C0805C104K5RAC	31433
C089	Cap,SMT,Ceramic,0.1uF,10%,50V,X7R,0805	CCFS07	C0805C104K5RAC	31433
C090	Cap,SMT,Ceramic,0.1uF,10%,50V,X7R,0805	CCFS07	C0805C104K5RAC	31433
C091	Cap,SMT,Ceramic,0.01uF,10%,50V,X7R,0603	CCFS04	C0603C103K5RAC	31433
C092	Cap,SMT,Ceramic,0.1uF,10%,50V,X7R,0805	CCFS07	C0805C104K5RAC	31433
C093	Cap,SMT,Ceramic,0.1uF,10%,50V,X7R,0805	CCFS07	C0805C104K5RAC	31433
C094	Cap,SMT,Ceramic,0.1uF,10%,50V,X7R,0805	CCFS07	C0805C104K5RAC	31433
C095	Cap,SMT,Ceramic,1uF,10%,100V,X7R,1210	CCFS60	12101C105KAT2A(ROHS)	AVX CORP
C096	Cap,SMT,Ceramic,0.1uF,10%,50V,X7R,0805	CCFS07	C0805C104K5RAC	31433
C097	Cap,SMT,Ceramic,0.1uF,10%,50V,X7R,0805	CCFS07	C0805C104K5RAC	31433
C098	Cap,SMT,Ceramic,1uF,10%,100V,X7R,1210	CCFS60	12101C105KAT2A(ROHS)	AVX CORP
C099	Cap,SMT,Ceramic,1uF,10%,100V,X7R,1210	CCFS60	12101C105KAT2A(ROHS)	AVX CORP
C100	Cap,SMT,Ceramic,1uF,10%,100V,X7R,1210	CCFS60	12101C105KAT2A(ROHS)	AVX CORP
C101	Cap,SMT,Ceramic,0.1uF,10%,50V,X7R,0805	CCFS07	C0805C104K5RAC	31433
C102	Cap,SMT,Ceramic,1uF,10%,100V,X7R,1210	CCFS60	12101C105KAT2A(ROHS)	AVX CORP
C103	Cap,SMT,Ceramic,1uF,10%,100V,X7R,1210	CCFS60	12101C105KAT2A(ROHS)	AVX CORP

Continued from previous page

REFDES	DESCRIPTION	NAUTEL #	VENDOR #	OEM CODE
C104	Cap,SMT,Ceramic,1uF,10%,100V,X7R,1210	CCFS60	12101C105KAT2A(ROHS)	AVX CORP
C105	Cap,SMT,Ceramic,1uF,10%,100V,X7R,1210	CCFS60	12101C105KAT2A(ROHS)	AVX CORP
C106	Cap,SMT,Ceramic,0.1uF,10%,50V,X7R,0805	CCFS07	C0805C104K5RAC	31433
C107	Cap,SMT,Ceramic,1uF,10%,100V,X7R,1210	CCFS60	12101C105KAT2A(ROHS)	AVX CORP
C108	Cap,SMT,Ceramic,1uF,10%,100V,X7R,1210	CCFS60	12101C105KAT2A(ROHS)	AVX CORP
C109	Cap,SMT,Ceramic,0.1uF,10%,50V,X7R,0805	CCFS07	C0805C104K5RAC	31433
C110	Cap,SMT,Ceramic,1uF,10%,100V,X7R,1210	CCFS60	12101C105KAT2A(ROHS)	AVX CORP
C111	Cap,SMT,Ceramic,1uF,10%,100V,X7R,1210	CCFS60	12101C105KAT2A(ROHS)	AVX CORP
C112	Cap,SMT,Ceramic,1uF,10%,100V,X7R,1210	CCFS60	12101C105KAT2A(ROHS)	AVX CORP
C113	Cap,SMT,Ceramic,1uF,10%,100V,X7R,1210	CCFS60	12101C105KAT2A(ROHS)	AVX CORP
C114	Cap,SMT,Ceramic,1uF,10%,100V,X7R,1210	CCFS60	12101C105KAT2A(ROHS)	AVX CORP
C115	Cap,SMT,Ceramic,1uF,10%,100V,X7R,1210	CCFS60	12101C105KAT2A(ROHS)	AVX CORP
C116	Capacitor, SMT, 0.054u, NPO,5%, J-lead, 4x2225, 1000V	CT88	HMC49JN543J102TH02	SCM35
C117	Capacitor, SMT, 0.054u, NPO,5%, J-lead, 4x2225, 1000V	CT88	HMC49JN543J102TH02	SCM35
C118	Cap,SMT,Ceramic,1uF,10%,100V,X7R,1210	CCFS60	12101C105KAT2A(ROHS)	AVX CORP
C119	Cap,SMT,Ceramic,1uF,10%,100V,X7R,1210	CCFS60	12101C105KAT2A(ROHS)	AVX CORP
C120	Cap,SMT,Ceramic,1uF,10%,100V,X7R,1210	CCFS60	12101C105KAT2A(ROHS)	AVX CORP
C121	Cap,SMT,Ceramic,1uF,10%,100V,X7R,1210	CCFS60	12101C105KAT2A(ROHS)	AVX CORP
C122	Cap,SMT,Ceramic,1uF,10%,100V,X7R,1210	CCFS60	12101C105KAT2A(ROHS)	AVX CORP
C123	Cap,SMT,Ceramic,1uF,10%,100V,X7R,1210	CCFS60	12101C105KAT2A(ROHS)	AVX CORP
C124	Cap,SMT,Ceramic,1uF,10%,100V,X7R,1210	CCFS60	12101C105KAT2A(ROHS)	AVX CORP
C125	Cap,SMT,Ceramic,1uF,10%,100V,X7R,1210	CCFS60	12101C105KAT2A(ROHS)	AVX CORP
C126	Cap,SMT,Ceramic,1uF,10%,100V,X7R,1210	CCFS60	12101C105KAT2A(ROHS)	AVX CORP
C127	Cap,SMT,Ceramic,1uF,10%,100V,X7R,1210	CCFS60	12101C105KAT2A(ROHS)	AVX CORP
C128	Not Used	-	NOT USED	37338
C129	Capacitor, SMT, Al Electroytic330uF, 25VDC,ESR 0.8ohm	CT57	AVS337M25G24T	2D829
C130	Not Used	-	NOT USED	37338
C131	Not Used	-	NOT USED	37338

Continued from previous page

REFDES	DESCRIPTION	NAUTEL #	VENDOR #	OEM CODE
C132	Not Used	-	NOT USED	37338
C133	Capacitor, SMT, 0.47u, 630V,X7R, 20%, j-lead, MLCC	CT58	CKG57NX7R2J474M(RoHS)	
C134	Capacitor, SMT, 0.47u, 630V,X7R, 20%, j-lead, MLCC	CT58	CKG57NX7R2J474M(RoHS)	
C135	Cap,SMT,Ceramic,0.1uF,10%,50V,X7R,0805	CCFS07	C0805C104K5RAC	31433
C136	Cap,SMT,Ceramic,1uF,10%,100V,X7R,1210	CCFS60	12101C105KAT2A(ROHS)	AVX CORP
C137	Cap,SMT,Ceramic,0.1uF,10%,50V,X7R,0805	CCFS07	C0805C104K5RAC	31433
C138	Cap,SMT,Ceramic,1uF,10%,100V,X7R,1210	CCFS60	12101C105KAT2A(ROHS)	AVX CORP
C139	Cap,SMT,Ceramic,0.1uF,10%,50V,X7R,0805	CCFS07	C0805C104K5RAC	31433
C140	Cap,SMT,Ceramic,0.1uF,10%,50V,X7R,0805	CCFS07	C0805C104K5RAC	31433
C141	Not Used	-	NOT USED	37338
C142	Not Used	-	NOT USED	37338
C143	Not Used	-	NOT USED	37338
C144	Cap,SMT,Tantalum,10uF,10%,35V,2917	CTFS03	T494D106K035AS	31433
C145	Cap,SMT,Tantalum,10uF,10%,35V,2917	CTFS03	T494D106K035AS	31433
C146	Cap,SMT,Tantalum,10uF,10%,35V,2917	CTFS03	T494D106K035AS	31433
C147	Cap,SMT,Tantalum,10uF,10%,35V,2917	CTFS03	T494D106K035AS	31433
CR01	Not Used	-	NOT USED	37338
CR02	Not Used	-	NOT USED	37338
CR03	Not Used	-	NOT USED	37338
CR04	Not Used	-	NOT USED	37338
CR05	Not Used	-	NOT USED	37338
CR06	Not Used	-	NOT USED	37338
CR07	Not Used	-	NOT USED	37338
CR08	Not Used	-	NOT USED	37338
CR09	Diode, SMT, Ultra Fast, 1200V,15A, D2PAK	QM64	STTH1512G(STATIC)(RoHS) ST Microelectronics	4QN91
CR10	Diode,SMT,Fast Switching,80V,0.5A SOD-323	QM55	1N4448HWS-7-F(STATIC)(ROHS)	12060
CR11	Diode,SMT,Zener,5.1V,5%,3W,SMB	QDZS01	1SMB5918BT3	04713
CR12	Diode,SMT,Zener,5.1V,5%,3W,SMB	QDZS01	1SMB5918BT3	04713
CR13	Diode,SMT,Fast Switching,80V,0.5A SOD-323	QM55	1N4448HWS-7-F(STATIC)(ROHS)	12060
CR14	Diode,SMT,Fast Switching,80V,0.5A SOD-323	QM55	1N4448HWS-7-F(STATIC)(ROHS)	12060
CR15	Diode,SMT,Zener,5.1V,5%,3W,SMB	QDZS01	1SMB5918BT3	04713
CR16	Diode,SMT,Fast Switching,80V,0.5A SOD-323	QM55	1N4448HWS-7-F(STATIC)(ROHS)	12060
CR17	Diode,SMT,Zener,5.1V,5%,3W,SMB	QDZS01	1SMB5918BT3	04713
CR18	Diode,SMT,Fast Switching,80V,0.5A SOD-323	QM55	1N4448HWS-7-F(STATIC)(ROHS)	12060

Continued from previous page

REFDES	DESCRIPTION	NAUTEL #	VENDOR #	OEM CODE
CR19	Diode,Schottky,600V,10A,SIC	QK50	CSD10060A(STATIC)	CREE INC
CR20	Diode,Schottky,600V,10A,SIC	QK50	CSD10060A(STATIC)	CREE INC
CR21	Diode,Schottky,600V,10A,SIC	QK50	CSD10060A(STATIC)	CREE INC
CR22	Not Used	-	NOT USED	37338
CR23	Not Used	-	NOT USED	37338
CR24	Not Used	-	NOT USED	37338
CR25	Not Used	-	NOT USED	37338
CR26	Not Used	-	NOT USED	37338
CR27	Diode,SMT,Fast Switching,80V,0.5A SOD-323	QM55	1N4448HWS-7-F(STATIC)(ROHS)	12060
CR28	Diode,SMT,Fast Switching,80V,0.5A SOD-323	QM55	1N4448HWS-7-F(STATIC)(ROHS)	12060
CR29	Diode,SMT,Ultrafast,200V,1A,SMB	QM47	MURS120T3	04713
CR30	Not Used	-	NOT USED	37338
CR31	Not Used	-	NOT USED	37338
CR32	Not Used	-	NOT USED	37338
CR33	Not Used	-	NOT USED	37338
CR34	Not Used	-	NOT USED	37338
CR35	Not Used	-	NOT USED	37338
CR36	Not Used	-	NOT USED	37338
CR37	Not Used	-	NOT USED	37338
CR38	Diode, SMT Ultrafast, 600V, 1ASMA	QM71	MURA160T3G(RoHS)	04713
CR39	Diode, SMT Ultrafast, 600V, 1ASMA	QM71	MURA160T3G(RoHS)	04713
CR40	Diode, SMT Ultrafast, 600V, 1ASMA	QM71	MURA160T3G(RoHS)	04713
DS01	Diode,SMT,LED,Bicolor,Red/Green,1210	QDLS04	597-7701-507(STATIC)	83330
F01	Fuse,SMT,Fuse Block,3A VeryFast Acting,Installed	FA46	154 003(ROHS)	75915
J01	Conn, Modular Jack, RJ45, Shld, Side, PWB, 50u	JM44	556591-1	09482
J02	Conn, Header,Square Post,Gold,Dual,40-pin	JF47	4-102973-0	09482
L01	Choke,SMT,Common Mode,2200 ohm,200mA,1206	LS22	DLW31SN222SQ2L(ROHS)	3EH09
L02	Choke,SMT,Common Mode,2200 ohm,200mA,1206	LS22	DLW31SN222SQ2L(ROHS)	3EH09
L03	Choke,SMT,Common Mode,2200 ohm,200mA,1206	LS22	DLW31SN222SQ2L(ROHS)	3EH09
L04	Choke,SMT,Common Mode,2200 ohm,200mA,1206	LS22	DLW31SN222SQ2L(ROHS)	3EH09
L05	Inductor, SMT, Choke, 600ohms,2A, 0805	LCFS01	ILHB0805RK601V	56845
L06	Inductor,SMT,Pwr,Shielded DrumCore,P1167series, 2A, 10.0uH	LS16	P1167.103	01961
L07	Inductor, SMT, Choke, 600ohms,2A, 0805	LCFS01	ILHB0805RK601V	56845
L08	Choke,SMT,Common Mode,2200 ohm,200mA,1206	LS22	DLW31SN222SQ2L(ROHS)	3EH09

Continued from previous page

REFDES	DESCRIPTION	NAUTEL #	VENDOR #	OEM CODE
L09	Choke,SMT,Common Mode,2200 ohm,200mA,1206	LS22	DLW31SN222SQ2L(ROHS)	3EH09
L10	Inductor Assy,	207-1053-03	207-1053-03	37338
L11	Inductor Assy,	207-1053-03	207-1053-03	37338
L12	Inductor Assy	207-1053-01	207-1053-01	37338
L13	Inductor Assy	207-1053-01	207-1053-01	37338
L14	Inductor Assy	207-1053-01	207-1053-01	37338
L15	Bead, Ferrite, 3.5mm, B Mtl	LXP20	21-030-B	33062
Q01	Transistor,SMT,MOSFET,N-Channel,100V,1.5A,SOT-223	QS25	IRLL110PbF(STATIC)(ROHS)	59993
Q02	Transistor,SMT,MOSFET,N-Channel,100V,1.5A,SOT-223	QS25	IRLL110PbF(STATIC)(ROHS)	59993
Q03	Transistor,SMT,MOSFET,N-Channel,100V,1.5A,SOT-223	QS25	IRLL110PbF(STATIC)(ROHS)	59993
Q04	Transistor,SMT,MOSFET,N-Channel,100V,1.5A,SOT-223	QS25	IRLL110PbF(STATIC)(ROHS)	59993
Q05	Transistor,SMT,MOSFET,N-Channel,100V,1.5A,SOT-223	QS25	IRLL110PbF(STATIC)(ROHS)	59993
Q06	Transistor,SMT,MOSFET,N-Channel,100V,1.5A,SOT-223	QS25	IRLL110PbF(STATIC)(ROHS)	59993
Q07	Installed at Next Higher Assy	+	INSTALLED AT NEXT HIGHER ASSY	37338
Q08	Installed at Next Higher Assy	+	INSTALLED AT NEXT HIGHER ASSY	37338
Q09	Installed at Next Higher Assy	+	INSTALLED AT NEXT HIGHER ASSY	37338
Q10	Installed at Next Higher Assy	+	INSTALLED AT NEXT HIGHER ASSY	37338
Q11	Transistor, FET, N, 500V, 30A,0.165 Ohm	QR75	IXFH30N50P(STATIC)	
Q12	Transistor, FET, N, 500V, 30A,0.165 Ohm	QR75	IXFH30N50P(STATIC)	
Q13	Transistor, FET, N, 500V, 30A,0.165 Ohm	QR75	IXFH30N50P(STATIC)	
R001	Resistor,SMT,MF,475ohms,1%,1/10W,0603	RFFS34	RK73H1JLTD4750F	59124
R002	Resistor, SMT, MF, 82.5 Ohms,1% 1/4W	RAD12	RK73H2BL82R5F	59124
R003	Resistor, SMT, MF, 82.5 Ohms,1% 1/4W	RAD12	RK73H2BL82R5F	59124
R004	Resistor,SMT,MF,475ohms,1%,1/10W,0603	RFFS34	RK73H1JLTD4750F	59124
R005	Resistor, SMT, MF, 82.5 Ohms,1% 1/4W	RAD12	RK73H2BL82R5F	59124
R006	Resistor, SMT, MF, 82.5 Ohms,1% 1/4W	RAD12	RK73H2BL82R5F	59124
R007	Resistor,SMT,MF,10.0Kohms,1%,1/10W,0603	RFFS50	RK73H1JLTD1002F	59124
R008	Resistor,SMT,MF,10.0Kohms,1%,1/10W,0603	RFFS50	RK73H1JLTD1002F	59124
R009	Resistor,SMT,MF,10.0Kohms,1%,1/10W,0603	RFFS50	RK73H1JLTD1002F	59124
R010	Resistor,SMT,MF,475ohms,1%,1/10W,0603	RFFS34	RK73H1JLTD4750F	59124
R011	Resistor,SMT,MF,475ohms,1%,1/10W,0603	RFFS34	RK73H1JLTD4750F	59124
R012	Resistor,SMT,MF,475ohms,1%,1/10W,0603	RFFS34	RK73H1JLTD4750F	59124
R013	Resistor,SMT,MF,475ohms,1%,1/10W,0603	RFFS34	RK73H1JLTD4750F	59124
R014	Resistor, SMT, MF, 221 Ohms,1% 1/4W	RAD17	RK73H2BL2210F	59124

Continued from previous page

REFDES	DESCRIPTION	NAUTEL #	VENDOR #	OEM CODE
R015	Resistor, SMT, MF, 221 Ohms,1% 1/4W	RAD17	RK73H2BL2210F	59124
R016	Resistor, SMT, MF, 82.5 Ohms,1% 1/4W	RAD12	RK73H2BL82R5F	59124
R017	Resistor, SMT, MF, 82.5 Ohms,1% 1/4W	RAD12	RK73H2BL82R5F	59124
R018	Resistor,SMT,MF,475ohms,1%,1/10W,0603	RFFS34	RK73H1JLTD4750F	59124
R019	Resistor,SMT,MF,475ohms,1%,1/10W,0603	RFFS34	RK73H1JLTD4750F	59124
R020	Resistor,SMT,MF,33.2Kohms,1%,1/10W,0603	RFFS56	RK73H1JLTD3322F	59124
R021	Resistor,SMT,MF,33.2Kohms,1%,1/10W,0603	RFFS56	RK73H1JLTD3322F	59124
R022	Resistor, SMT, MF, 82.5 Ohms,1% 1/4W	RAD12	RK73H2BL82R5F	59124
R023	Resistor, SMT, MF, 82.5 Ohms,1% 1/4W	RAD12	RK73H2BL82R5F	59124
R024	Resistor, SMT, MF, 1000 Ohms,1% 1/4W	RAD25	RK73H2BL1001F	59124
R025	Resistor,SMT,MF,33.2Kohms,1%,1/10W,0603	RFFS56	RK73H1JLTD3322F	59124
R026	Resistor, SMT, 0 Ohms, 1%, 1W2512	RAD85Z	CR2512-1W-000T-SP(RoHS)	
R027	Not Used	-	NOT USED	37338
R028	Resistor,SMT,MF,10.0Kohms,1%,1/10W,0603	RFFS50	RK73H1JLTD1002F	59124
R029	Not Used	-	NOT USED	37338
R030	Resistor,SMT,MF,0.0ohms,Jumper,0603	RFFS01	RK73Z1JLTD	59124
R031	Not Used	-	NOT USED	37338
R032	Resistor,SMT,MF,10.0Kohms,1%,1/10W,0603	RFFS50	RK73H1JLTD1002F	59124
R033	Resistor,SMT,MF,10.0Kohms,1%,1/10W,0603	RFFS50	RK73H1JLTD1002F	59124
R034	Resistor,SMT,MF,10.0Kohms,1%,1/10W,0603	RFFS50	RK73H1JLTD1002F	59124
R035	Resistor, SMT, 0 Ohms, 1%, 1W2512	RAD85Z	CR2512-1W-000T-SP(RoHS)	
R036	Resistor,SMT,MF,10.0Kohms,1%,1/10W,0603	RFFS50	RK73H1JLTD1002F	59124
R037	Not Used	-	NOT USED	37338
R038	Not Used	-	NOT USED	37338
R039	Resistor,SMT,MF,10ohms,1%,2W	RAD49Z	CR2512-2W-10R0F-SP	VENKEL
R040	Resistor,SMT,MF,20ohms,1%,2W	RAD50Z	CR2512-2W-20R0F-SP	VENKEL
R041	Resistor,SMT,MF,20ohms,1%,2W	RAD50Z	CR2512-2W-20R0F-SP	VENKEL
R042	Resistor,SMT,MF,20ohms,1%,2W	RAD50Z	CR2512-2W-20R0F-SP	VENKEL
R043	Resistor, SMT, MF, 1000 Ohms,1% 1/4W	RAD25	RK73H2BL1001F	59124
R044	Resistor, SMT, MF, 1000 Ohms,1% 1/4W	RAD25	RK73H2BL1001F	59124
R045	Resistor, SMT, MF, 1000 Ohms,1% 1/4W	RAD25	RK73H2BL1001F	59124
R046	Resistor, SMT, MF, 121 Ohms,1% 1/4W	RAD14	RK73H2BL1210F	59124
R047	Resistor, SMT, MF, 121 Ohms,1% 1/4W	RAD14	RK73H2BL1210F	59124
R048	Resistor,SMT,MF,3320ohms,1%,1/10W,0603	RFFS44	RK73H1JLTD3321F	59124
R049	Resistor,SMT,MF,3320ohms,1%,1/10W,0603	RFFS44	RK73H1JLTD3321F	59124
R050	Resistor,SMT,MF,3320ohms,1%,1/10W,0603	RFFS44	RK73H1JLTD3321F	59124

Continued from previous page

REFDES	DESCRIPTION	NAUTEL #	VENDOR #	OEM CODE
R051	Resistor, SMT, MF, 1.0M Ohms,1% 1/4W	RAE13	RK73H2BL1004F	59124
R052	Resistor, SMT, MF, 1.0M Ohms,1% 1/4W	RAE13	RK73H2BL1004F	59124
R053	Resistor, SMT, MF, 1.0M Ohms,1% 1/4W	RAE13	RK73H2BL1004F	59124
R054	Resistor,SMT,MF,100Kohms,1%,1/10W,0603	RFFS62	RK73H1JLTD1003F	59124
R055	Resistor,SMT,MF,20ohms,1%,2W	RAD50Z	CR2512-2W-20R0F-SP	VENKEL
R056	Resistor,SMT,MF,20ohms,1%,2W	RAD50Z	CR2512-2W-20R0F-SP	VENKEL
R057	Resistor, SMT, MF, 1.0M Ohms,1% 1/4W	RAE13	RK73H2BL1004F	59124
R058	Resistor, SMT, MF, 1.0M Ohms,1% 1/4W	RAE13	RK73H2BL1004F	59124
R059	Resistor, SMT, MF, 1.0M Ohms,1% 1/4W	RAE13	RK73H2BL1004F	59124
R060	Resistor,SMT,MF,3320ohms,1%,1/10W,0603	RFFS44	RK73H1JLTD3321F	59124
R061	Resistor,SMT,MF,10.0Kohms,1%,1/10W,0603	RFFS50	RK73H1JLTD1002F	59124
R062	Resistor,SMT,MF,10.0Kohms,1%,1/10W,0603	RFFS50	RK73H1JLTD1002F	59124
R063	Resistor, SMT, MF, 1.0M Ohms,1% 1/4W	RAE13	RK73H2BL1004F	59124
R064	Resistor,SMT,MF,10.0Kohms,1%,1/10W,0603	RFFS50	RK73H1JLTD1002F	59124
R065	Resistor,SMT,MF,10.0Kohms,1%,1/10W,0603	RFFS50	RK73H1JLTD1002F	59124
R066	Resistor,SMT,MF,28.7 KOhms,1%,1/10W,0603	RFFS83	RK73H1JT2872F	59124
R067	Resistor, SMT, MF, 1.0M Ohms,1% 1/4W	RAE13	RK73H2BL1004F	59124
R068	Resistor, SMT, MF, 1.0M Ohms,1% 1/4W	RAE13	RK73H2BL1004F	59124
R069	Resistor,SMT,MF,28.7 KOhms,1%,1/10W,0603	RFFS83	RK73H1JT2872F	59124
R070	Resistor,SMT,MF,20ohms,1%,2W	RAD50Z	CR2512-2W-20R0F-SP	VENKEL
R071	Resistor,SMT,MF,20ohms,1%,2W	RAD50Z	CR2512-2W-20R0F-SP	VENKEL
R072	Resistor,SMT,MF,10.0Kohms,1%,1/10W,0603	RFFS50	RK73H1JLTD1002F	59124
R073	Resistor,SMT,MF,10.0Kohms,1%,1/10W,0603	RFFS50	RK73H1JLTD1002F	59124
R074	Resistor,SMT,MF,100Kohms,1%,1/10W,0603	RFFS62	RK73H1JLTD1003F	59124
R075	Resistor,SMT,MF,100Kohms,1%,1/10W,0603	RFFS62	RK73H1JLTD1003F	59124
R076	Resistor, SMT, MF, 121 Ohms,1% 1/4W	RAD14	RK73H2BL1210F	59124
R077	Resistor, SMT, MF, 1000 Ohms,1% 1/4W	RAD25	RK73H2BL1001F	59124
R078	Resistor,SMT,MF,22.1ohms,1%,1/10W,0603	RFFS18	RK73H1JLTD22R1F	59124
R079	Resistor,SMT,MF,10.0Kohms,1%,1/10W,0603	RFFS50	RK73H1JLTD1002F	59124
R080	Not Used	-	NOT USED	37338
R081	Resistor,SMT,MF,10.0Kohms,1%,1/10W,0603	RFFS50	RK73H1JLTD1002F	59124
R082	Resistor,SMT,MF,8250ohms,1%,1/10W,0603	RFFS49	RK73H1JLTD8251F	59124
R083	Resistor,SMT,MF,10.0Kohms,1%,1/10W,0603	RFFS50	RK73H1JLTD1002F	59124
R084	Resistor,SMT,MF,3320ohms,1%,1/10W,0603	RFFS44	RK73H1JLTD3321F	59124
R085	Resistor,SMT,MF,10.0Kohms,1%,1/10W,0603	RFFS50	RK73H1JLTD1002F	59124
R086	Resistor,SMT,MF,3320ohms,1%,1/10W,0603	RFFS44	RK73H1JLTD3321F	59124
R087	Resistor,SMT,MF,1500ohms,1%,1/10W,0603	RFFS40	RK73H1JLTD1501F	59124

Continued from previous page

REFDES	DESCRIPTION	NAUTEL #	VENDOR #	OEM CODE
R088	Resistor,SMT,MF,10.0Kohms,1%,1/10W,0603	RFFS50	RK73H1JLTD1002F	59124
R089	Resistor,SMT,MF,10.0Kohms,1%,1/10W,0603	RFFS50	RK73H1JLTD1002F	59124
R090	Resistor,SMT,MF,10.0Kohms,1%,1/10W,0603	RFFS50	RK73H1JLTD1002F	59124
R091	Resistor, SMT, MF, 270 Ohms,1%, 1W 2512	RAD79	ERJ-1TYF271U(RoHS)	
R092	Resistor,SMT,MF,475ohms,1%,1/10W,0603	RFFS34	RK73H1JLTD4750F	59124
R093	Resistor,SMT,MF,27.4Kohms,1%,1/10W,0603	RFFS55	RK73H1JLTD2742F	59124
R094	Resistor, SMT, MF, 121 Ohms,1% 1/4W	RAD14	RK73H2BL1210F	59124
R095	Resistor,SMT,MF,10.0Kohms,1%,1/10W,0603	RFFS50	RK73H1JLTD1002F	59124
R096	Resistor,SMT,MF,475ohms,1%,1/10W,0603	RFFS34	RK73H1JLTD4750F	59124
R097	Resistor, SMT, MF, 82.5 Ohms,1% 1/4W	RAD12	RK73H2BL82R5F	59124
R098	Resistor,SMT,MF,475ohms,1%,1/10W,0603	RFFS34	RK73H1JLTD4750F	59124
R099	Resistor,SMT,MF,475ohms,1%,1/10W,0603	RFFS34	RK73H1JLTD4750F	59124
R100	Resistor, SMT, MF, 82.5 Ohms,1% 1/4W	RAD12	RK73H2BL82R5F	59124
R101	Resistor, SMT, MF, 2210 Ohms,1% 1/4W	RAD29	RK73H2BL2211F	59124
R102	Resistor,SMT,MF,10.0Kohms,1%,1/10W,0603	RFFS50	RK73H1JLTD1002F	59124
R103	Resistor, SMT, MF, 82.5 Ohms,1% 1/4W	RAD12	RK73H2BL82R5F	59124
R104	Resistor, SMT, MF, 82.5 Ohms,1% 1/4W	RAD12	RK73H2BL82R5F	59124
R105	Resistor,SMT,MF,10.0Kohms,1%,1/10W,0603	RFFS50	RK73H1JLTD1002F	59124
R106	Resistor,SMT,MF,10.0Kohms,1%,1/10W,0603	RFFS50	RK73H1JLTD1002F	59124
R107	Resistor,SMT,MF,20ohms,1%,2W	RAD50Z	CR2512-2W-20R0F-SP	VENKEL
R108	Resistor,SMT,MF,10.0Kohms,1%,1/10W,0603	RFFS50	RK73H1JLTD1002F	59124
R109	Resistor,SMT,MF,10.0Kohms,1%,1/10W,0603	RFFS50	RK73H1JLTD1002F	59124
R110	Resistor, SMT, Power, 5 ohms,1%, 5W	RAD81	HPC 12 5.0 1% R(RoHS)	1E4C5
R111	Resistor, SMT, Power, 5 ohms,1%, 5W	RAD81	HPC 12 5.0 1% R(RoHS)	1E4C5
R112	Resistor,SMT,MF,10ohms,1%,2W	RAD49Z	CR2512-2W-10R0F-SP	VENKEL
R113	Resistor, SMT, Power, 5 ohms,1%, 5W	RAD81	HPC 12 5.0 1% R(RoHS)	1E4C5
R114	Resistor, SMT, Power, 5 ohms,1%, 5W	RAD81	HPC 12 5.0 1% R(RoHS)	1E4C5
R115	Resistor, SMT, MF, 1000 Ohms,1% 1/4W	RAD25	RK73H2BL1001F	59124
R116	Resistor, SMT, MF, 1000 Ohms,1% 1/4W	RAD25	RK73H2BL1001F	59124
R117	Resistor, SMT, MF, 1000 Ohms,1% 1/4W	RAD25	RK73H2BL1001F	59124
R118	Resistor, SMT, MF, 1000 Ohms,1% 1/4W	RAD25	RK73H2BL1001F	59124
R119	Not Used	-	NOT USED	37338
R120	Not Used	-	NOT USED	37338
R121	Not Used	-	NOT USED	37338
R122	Resistor,SMT,MF,10.0Kohms,1%,1/10W,0603	RFFS50	RK73H1JLTD1002F	59124

Continued from previous page

REFDES	DESCRIPTION	NAUTEL #	VENDOR #	OEM CODE
R123	Resistor, SMT, 0 Ohms, 1%, 1W2512	RAD85Z	CR2512-1W-000T-SP(RoHS)	
R124	Resistor, SMT, MF, 4750 Ohms,1%, 1/4W	RAD33	RK73H2BL4751F	59124
R125	Resistor, SMT, MF, 4750 Ohms,1%, 1/4W	RAD33	RK73H2BL4751F	59124
R126	Resistor,SMT,MF,10ohms,1%,2W	RAD49Z	CR2512-2W-10R0F-SP	VENKEL
R127	Not Used	-	NOT USED	37338
R128	Resistor,SMT,MF,0.0ohms,Jumper,0603	RFFS01	RK73Z1JLTD	59124
R129	Not Used	-	NOT USED	37338
R130	Not Used	-	NOT USED	37338
R131	Not Used	-	NOT USED	37338
R132	Not Used	-	NOT USED	37338
R133	Not Used	-	NOT USED	37338
R134	Not Used	-	NOT USED	37338
T01	Toroid, Ferrite, Uncoated,22.1mmOD	LA39	B64290-A719-X49	C4751
T02	Toroid, Ferrite, Uncoated,22.1mmOD	LA39	B64290-A719-X49	C4751
T03	Toroid, Ferrite, Uncoated,22.1mmOD	LA39	B64290-A719-X49	C4751
T04	Toroid, Ferrite, Uncoated,22.1mmOD	LA39	B64290-A719-X49	C4751
U01	IC,SMT,Quad RS-422 Receiver,16-SOIC	UT91	DS26C32ATM(STATIC)	NATIONAL
U02	IC, SMT, Quad FET Driver, 2A, Non-inverting	UT137	EL7457CLZ(RoSH)	
U03	IC, MOSFET, Gate Driver, 9A,20Vpk IN	UD93	ZXGD3002E6(STATIC)(RoHS)	
U04	IC, MOSFET, Gate Driver, 9A,20Vpk IN	UD93	ZXGD3002E6(STATIC)(RoHS)	
U05	IC, MOSFET, Gate Driver, 9A,20Vpk IN	UD93	ZXGD3002E6(STATIC)(RoHS)	
U06	Not Used	-	NOT USED	37338
U07	Not Used	-	NOT USED	37338
U08	Not Used	-	NOT USED	37338
U09	Not Used	-	NOT USED	37338
U10	Not Used	-	NOT USED	37338
U11	Not Used	-	NOT USED	37338
U12	Not Used	-	NOT USED	37338
U13	Not Used	-	NOT USED	37338
U14	Not Used	-	NOT USED	37338
U15	Not Used	-	NOT USED	37338
U16	Not Used	-	NOT USED	37338
U17	Current Sensor, Hall, 50A,AC/DC, Bi Direc	UP103	ACS756KCA-050B-PFF-T(Static)(RoHS)	
U18	IC, SMT, High Speed Comparator, SOIC-8	UT70	TL3016ID(STATIC)	01295
U19	Not Used	-	NOT USED	37338

Continued from previous page

NAPA34A Modulator/RF Amplifier PWBAssy, NX Series

REFDES	DESCRIPTION	NAUTEL #	VENDOR #	OEM CODE
U20	IC,SMT,RS-485 Transceiver,Sgl,SOIC-8	UDTS03	DS36C278TM(STATIC)	27014
U21	IC,SMT,Opamp,Quad,Rail-To-Rail,SOIC-14	ULAS02	TLV2374ID(STATIC)	01295
U22	IC,SMT,Micro, ADC,PWM,TQFP-32,16k Flash	UX95	ATMEGA 168-20AI(STATIC)	1FN41
U23	IC, SMT, FET Driver, 14A, Non-inverting, TO-263	UT136	IXDD614YI(STATIC)(RoHS)	0A5K5
U24	IC, SMT, FET Driver, 14A, Non-inverting, TO-263	UT136	IXDD614YI(STATIC)(RoHS)	0A5K5
U25	IC,SMT,Single,2 InputExclusive OR,SOT23-5L	UD64	74V1G86STR(STATIC)(ROHS)	SCE76
U26	IC, SMT, FET Driver, 14A, Non-inverting, TO-263	UT136	IXDD614YI(STATIC)(RoHS)	0A5K5
U27	IC,SMT,Quad RS-422 Receiver,16-SOIC	UT91	DS26C32ATM(STATIC)	NATIONAL
U28	IC,SMT,Voltage Regulator,5V,1A, D2PAK	UT93	L7805ABD2T-TR(STATIC)(ROHS)	ST MICRO
U29	IC, SMT, FET Driver, 14A, Non-inverting, TO-263	UT136	IXDD614YI(STATIC)(RoHS)	0A5K5
U30	IC, SMT, Delay Line, 5 Taps,20-100nS, SOIC8 (150mil)	UD81	DS1100Z-100+(Static)(RoHS) Dallas	0B0A9
U31	IC, SMT, 2-Input Logic, UHSUniv Config SC70-6	UD82	NC7SZ57P6X(Static)(RoHS)	07933
U32	IC, SMT, 2-Input Logic, UHSUniv Config SC70-6	UD82	NC7SZ57P6X(Static)(RoHS)	07933
Y01	Crystal, SMT, Fund, 11.0592MHz	XFPS11	HCM49-11.0592MABJ-UT(RoHS)	3DX59

REFDES	DESCRIPTION	NAUTEL #	VENDOR #	OEM CODE
BT01	Battery, Lithium, 3V,20mm Coin Cell	BBLT01	CR2032	PANAS
C001	Cap, SMT, Ceramic, 0.1uF, 10%25V X7R, 0603	CCFS52	C0603C104K3RAC	31433
C002	Cap, SMT, Ceramic, 0.1uF, 10%25V X7R, 0603	CCFS52	C0603C104K3RAC	31433
C003	Cap,SMT,Ceramic,1uF,10%,25V,,X7R,1206	CCFS10	C1206C105K3RAC	31433
C004	Cap,SMT,Ceramic,1uF,10%,25V,,X7R,1206	CCFS10	C1206C105K3RAC	31433
C005	Cap, SMT, Ceramic, 0.1uF, 10%25V X7R, 0603	CCFS52	C0603C104K3RAC	31433
C006	Cap, SMT, Ceramic, 0.1uF, 10%25V X7R, 0603	CCFS52	C0603C104K3RAC	31433
C007	Cap, SMT, Ceramic, 0.1uF, 10%25V X7R, 0603	CCFS52	C0603C104K3RAC	31433
C008	Cap, SMT, Ceramic, 0.1uF, 10%25V X7R, 0603	CCFS52	C0603C104K3RAC	31433
C009	Cap,SMT,Ceramic,10uF,20%,6.3V,X5R,0805	CCFS57	C2012X5R0J106M	54583
C010	Cap, SMT, Ceramic, 0.1uF, 10%25V X7R, 0603	CCFS52	C0603C104K3RAC	31433
C011	Cap,SMT,Ceramic,1uF,10%,25V,,X7R,1206	CCFS10	C1206C105K3RAC	31433
C012	Cap,SMT,Ceramic,1uF,10%,25V,,X7R,1206	CCFS10	C1206C105K3RAC	31433
C013	Cap,SMT,Ceramic,1uF,10%,25V,,X7R,1206	CCFS10	C1206C105K3RAC	31433
C014	Cap,SMT,Ceramic,1uF,10%,25V,,X7R,1206	CCFS10	C1206C105K3RAC	31433
C015	Cap, SMT, Ceramic, 0.1uF, 10%25V X7R, 0603	CCFS52	C0603C104K3RAC	31433
C016	Cap, SMT, Ceramic, 0.1uF, 10%25V X7R, 0603	CCFS52	C0603C104K3RAC	31433
C017	Cap, SMT, Ceramic, 0.1uF, 10%25V X7R, 0603	CCFS52	C0603C104K3RAC	31433
C018	Cap, SMT, Ceramic, 0.1uF, 10%25V X7R, 0603	CCFS52	C0603C104K3RAC	31433
C019	Cap,SMT,Ceramic,1uF,10%,25V,,X7R,1206	CCFS10	C1206C105K3RAC	31433
C020	Cap,SMT,Ceramic,1uF,10%,25V,,X7R,1206	CCFS10	C1206C105K3RAC	31433
C021	Cap,SMT,Ceramic,1uF,10%,25V,,X7R,1206	CCFS10	C1206C105K3RAC	31433
C022	Cap, SMT, Ceramic, 0.1uF, 10%25V X7R, 0603	CCFS52	C0603C104K3RAC	31433
C023	Cap,SMT,Ceramic,1uF,10%,25V,,X7R,1206	CCFS10	C1206C105K3RAC	31433
C024	Cap, SMT, Ceramic, 0.1uF, 10%25V X7R, 0603	CCFS52	C0603C104K3RAC	31433
C025	Cap,SMT,Ceramic,1uF,10%,25V,,X7R,1206	CCFS10	C1206C105K3RAC	31433
C026	Cap, SMT, Ceramic, 0.1uF, 10%25V X7R, 0603	CCFS52	C0603C104K3RAC	31433
C027	Cap,SMT,Ceramic,1uF,10%,25V,,X7R,1206	CCFS10	C1206C105K3RAC	31433
C028	Cap, SMT, Ceramic, 0.1uF, 10%25V X7R, 0603	CCFS52	C0603C104K3RAC	31433
C029	Cap, SMT, Ceramic, 0.1uF, 10%25V X7R, 0603	CCFS52	C0603C104K3RAC	31433
C030	Cap, SMT, Ceramic, 0.1uF, 10%25V X7R, 0603	CCFS52	C0603C104K3RAC	31433
C031	Cap,SMT,Ceramic,1uF,10%,25V,,X7R,1206	CCFS10	C1206C105K3RAC	31433
C032	Cap, SMT, Ceramic,47uF,20%,6.3V, 1210	CCFS53	C3225X5R0J476M(RoHS)	56289
C033	Cap, SMT, Ceramic, 0.1uF, 10%25V X7R, 0603	CCFS52	C0603C104K3RAC	31433
C034	Cap, SMT, Ceramic, 0.1uF, 10%25V X7R, 0603	CCFS52	C0603C104K3RAC	31433
C035	Cap,SMT,Ceramic,1uF,10%,25V,,X7R,1206	CCFS10	C1206C105K3RAC	31433
C036	Cap, SMT, Ceramic, 0.1uF, 10%25V X7R, 0603	CCFS52	C0603C104K3RAC	31433
C037	Cap, SMT, Ceramic, 0.1uF, 10%25V X7R, 0603	CCFS52	C0603C104K3RAC	31433

Continued from previous page

NAPC160B/01 Control/Interface PWB Assy, NXSeries

REFDES	DESCRIPTION	NAUTEL #	VENDOR #	OEM CODE
C038	Cap, SMT, Ceramic,47uF,20%,6.3V, 1210	CCFS53	C3225X5R0J476M(RoHS)	56289
C039	Cap, SMT, Ceramic, 0.1uF, 10%25V X7R, 0603	CCFS52	C0603C104K3RAC	31433
C040	Cap, SMT, Ceramic, 0.1uF, 10%25V X7R, 0603	CCFS52	C0603C104K3RAC	31433
C041	Cap, SMT, Ceramic, 0.1uF, 10%25V X7R, 0603	CCFS52	C0603C104K3RAC	31433
C042	Cap, SMT, Ceramic, 0.1uF, 10%25V X7R, 0603	CCFS52	C0603C104K3RAC	31433
C043	Cap,SMT,Ceramic,1uF,10%,25V,,X7R,1206	CCFS10	C1206C105K3RAC	31433
C044	Cap,SMT,Ceramic,1uF,10%,25V,,X7R,1206	CCFS10	C1206C105K3RAC	31433
C045	Cap,SMT,Ceramic,1uF,10%,25V,,X7R,1206	CCFS10	C1206C105K3RAC	31433
C046	Cap,SMT,Ceramic,1uF,10%,25V,,X7R,1206	CCFS10	C1206C105K3RAC	31433
C047	Cap,SMT,Ceramic,0.01uF,10%,50V,X7R,0603	CCFS04	C0603C103K5RAC	31433
C048	Cap, SMT, Ceramic, 0.1uF, 10%25V X7R, 0603	CCFS52	C0603C104K3RAC	31433
C049	Cap,SMT,Ceramic,10uF,20%,6.3V,X5R,0805	CCFS57	C2012X5R0J106M	54583
C050	Cap,SMT,Ceramic,10uF,20%,6.3V,X5R,0805	CCFS57	C2012X5R0J106M	54583
C051	Cap, SMT, Ceramic, 0.1uF, 10%25V X7R, 0603	CCFS52	C0603C104K3RAC	31433
C052	Cap, SMT, Ceramic, 0.1uF, 10%25V X7R, 0603	CCFS52	C0603C104K3RAC	31433
C053	Cap,SMT,Ceramic,10uF,20%,6.3V,X5R,0805	CCFS57	C2012X5R0J106M	54583
C054	Cap, SMT, Ceramic, 0.1uF, 10%25V X7R, 0603	CCFS52	C0603C104K3RAC	31433
C055	Cap, SMT, Ceramic, 0.1uF, 10%25V X7R, 0603	CCFS52	C0603C104K3RAC	31433
C056	Cap, SMT, Ceramic, 0.1uF, 10%25V X7R, 0603	CCFS52	C0603C104K3RAC	31433
C057	Cap, SMT, Ceramic, 0.1uF, 10%25V X7R, 0603	CCFS52	C0603C104K3RAC	31433
C058	Cap, SMT, Ceramic, 0.1uF, 10%25V X7R, 0603	CCFS52	C0603C104K3RAC	31433
C059	Cap, SMT, Ceramic, 0.1uF, 10%25V X7R, 0603	CCFS52	C0603C104K3RAC	31433
C060	Cap, SMT, Ceramic, 0.1uF, 10%25V X7R, 0603	CCFS52	C0603C104K3RAC	31433
C061	Cap, SMT, Ceramic, 0.1uF, 10%25V X7R, 0603	CCFS52	C0603C104K3RAC	31433
C062	Cap, SMT, Ceramic, 0.1uF, 10%25V X7R, 0603	CCFS52	C0603C104K3RAC	31433
C063	Cap, SMT, Ceramic, 0.1uF, 10%25V X7R, 0603	CCFS52	C0603C104K3RAC	31433
C064	Cap, SMT, Ceramic, 0.1uF, 10%25V X7R, 0603	CCFS52	C0603C104K3RAC	31433
C065	Cap, SMT, Ceramic, 0.1uF, 10%25V X7R, 0603	CCFS52	C0603C104K3RAC	31433
C066	Cap, SMT, Ceramic, 0.1uF, 10%25V X7R, 0603	CCFS52	C0603C104K3RAC	31433
C067	Cap, SMT, Ceramic, 0.1uF, 10%25V X7R, 0603	CCFS52	C0603C104K3RAC	31433
C068	Cap, SMT, Ceramic, 0.1uF, 10%25V X7R, 0603	CCFS52	C0603C104K3RAC	31433
C069	Cap, SMT, Ceramic, 0.1uF, 10%25V X7R, 0603	CCFS52	C0603C104K3RAC	31433
C070	Cap, SMT, Ceramic,47uF,20%,6.3V, 1210	CCFS53	C3225X5R0J476M(RoHS)	56289
C071	Cap, SMT, Ceramic, 0.1uF, 10%25V X7R, 0603	CCFS52	C0603C104K3RAC	31433
C072	Cap, SMT, Ceramic, 0.1uF, 10%25V X7R, 0603	CCFS52	C0603C104K3RAC	31433
C073	Cap, SMT, Ceramic, 0.1uF, 10%25V X7R, 0603	CCFS52	C0603C104K3RAC	31433
C074	Cap, SMT, Ceramic, 0.1uF, 10%25V X7R, 0603	CCFS52	C0603C104K3RAC	31433
C075	Cap, SMT, Ceramic, 0.1uF, 10%25V X7R, 0603	CCFS52	C0603C104K3RAC	31433

Continued from previous page

NAPC160B/01 Control/Interface PWB Assy, NXSeries

REFDES	DESCRIPTION	NAUTEL #	VENDOR #	OEM CODE
C076	Cap, SMT, Ceramic, 0.1uF, 10%25V X7R, 0603	CCFS52	C0603C104K3RAC	31433
C077	Cap, SMT, Ceramic, 0.1uF, 10%25V X7R, 0603	CCFS52	C0603C104K3RAC	31433
C078	Cap, SMT, Ceramic, 0.1uF, 10%25V X7R, 0603	CCFS52	C0603C104K3RAC	31433
C079	Cap, SMT, Ceramic, 0.1uF, 10%25V X7R, 0603	CCFS52	C0603C104K3RAC	31433
C080	Cap,SMT,Ceramic,1uF,10%,25V,,X7R,1206	CCFS10	C1206C105K3RAC	31433
C081	Cap, SMT, Ceramic, 0.1uF, 10%25V X7R, 0603	CCFS52	C0603C104K3RAC	31433
C082	Cap,SMT,Ceramic,1uF,10%,25V,,X7R,1206	CCFS10	C1206C105K3RAC	31433
C083	Cap,SMT,Ceramic,10uF,20%,6.3V,X5R,0805	CCFS57	C2012X5R0J106M	54583
C084	Cap,SMT,Ceramic,1uF,10%,25V,,X7R,1206	CCFS10	C1206C105K3RAC	31433
C085	Cap,SMT,Ceramic,10uF,20%,6.3V,X5R,0805	CCFS57	C2012X5R0J106M	54583
C086	Cap, SMT, Ceramic, 0.1uF, 10%25V X7R, 0603	CCFS52	C0603C104K3RAC	31433
C087	Cap, SMT, Ceramic, 0.1uF, 10%25V X7R, 0603	CCFS52	C0603C104K3RAC	31433
C088	Cap, SMT, Ceramic, 0.1uF, 10%25V X7R, 0603	CCFS52	C0603C104K3RAC	31433
C089	Cap, SMT, Ceramic,47uF,20%,6.3V, 1210	CCFS53	C3225X5R0J476M(RoHS)	56289
C090	Cap,SMT,Ceramic,1uF,10%,25V,,X7R,1206	CCFS10	C1206C105K3RAC	31433
C091	Cap, SMT, Ceramic, 0.1uF, 10%25V X7R, 0603	CCFS52	C0603C104K3RAC	31433
C092	Cap,SMT,Ceramic,1uF,10%,25V,,X7R,1206	CCFS10	C1206C105K3RAC	31433
C093	Cap, SMT, Ceramic, 0.1uF, 10%25V X7R, 0603	CCFS52	C0603C104K3RAC	31433
C094	Cap,SMT,Ceramic,1uF,10%,25V,,X7R,1206	CCFS10	C1206C105K3RAC	31433
C095	Cap, SMT, Ceramic, 0.1uF, 10%25V X7R, 0603	CCFS52	C0603C104K3RAC	31433
C096	Cap,SMT,Tantalum,10uF,10%,35V,2917	CTFS03	T494D106K035AS	31433
C097	Cap,SMT,Ceramic,0.001uF,10%,50V,X7R,0603	CCFS01	C0603C102K5RAC	31433
C098	Cap, SMT, Ceramic, 0.1uF, 10%25V X7R, 0603	CCFS52	C0603C104K3RAC	31433
C099	Cap,SMT,Ceramic,1uF,10%,25V,,X7R,1206	CCFS10	C1206C105K3RAC	31433
C100	Cap, SMT, Ceramic, 0.1uF, 10%25V X7R, 0603	CCFS52	C0603C104K3RAC	31433
C101	Cap,SMT,Tantalum,10uF,10%,35V,2917	CTFS03	T494D106K035AS	31433
C102	Cap,SMT,Ceramic,1uF,10%,25V,,X7R,1206	CCFS10	C1206C105K3RAC	31433
C103	Cap,SMT,Tantalum,10uF,10%,35V,2917	CTFS03	T494D106K035AS	31433
C104	Cap, SMT, Ceramic, 0.1uF, 10%25V X7R, 0603	CCFS52	C0603C104K3RAC	31433
C105	Cap,SMT,Ceramic,1uF,10%,25V,,X7R,1206	CCFS10	C1206C105K3RAC	31433
C106	Cap, SMT, Ceramic, 0.1uF, 10%25V X7R, 0603	CCFS52	C0603C104K3RAC	31433
C107	Cap, SMT, Ceramic, 0.1uF, 10%25V X7R, 0603	CCFS52	C0603C104K3RAC	31433
C108	Cap,SMT,Ceramic,1uF,10%,25V,,X7R,1206	CCFS10	C1206C105K3RAC	31433
C109	Cap, SMT, Ceramic, 0.1uF, 10%25V X7R, 0603	CCFS52	C0603C104K3RAC	31433
C110	Cap, SMT, Ceramic, 0.1uF, 10%25V X7R, 0603	CCFS52	C0603C104K3RAC	31433
C111	Cap,SMT,Tantalum,10uF,10%,35V,2917	CTFS03	T494D106K035AS	31433
C112	Cap,SMT,Ceramic,1uF,10%,25V,,X7R,1206	CCFS10	C1206C105K3RAC	31433
C113	Cap,SMT,Ceramic,1uF,10%,25V,,X7R,1206	CCFS10	C1206C105K3RAC	31433
C114	Cap,SMT,Ceramic,0.01uF,10%,50V,X7R,0603	CCFS04	C0603C103K5RAC	31433

Continued from previous page

NAPC160B/01 Control/Interface PWB Assy, NXSeries

REFDES	DESCRIPTION	NAUTEL #	VENDOR #	OEM CODE
C115	Cap, SMT, Ceramic, 0.1uF, 10%25V X7R, 0603	CCFS52	C0603C104K3RAC	31433
C116	Cap,SMT,Ceramic,0.0047uF,10%,50V,X7R,0603	CCFS03	C0603C472K5RAC	31433
C117	Cap, SMT, Ceramic, 0.1uF, 10%25V X7R, 0603	CCFS52	C0603C104K3RAC	31433
C118	Cap,SMT,Tantalum,10uF,10%,35V,2917	CTFS03	T494D106K035AS	31433
C119	Cap, SMT, Ceramic, 0.1uF, 10%25V X7R, 0603	CCFS52	C0603C104K3RAC	31433
C120	Cap, SMT, Ceramic, 0.1uF, 10%25V X7R, 0603	CCFS52	C0603C104K3RAC	31433
C121	Cap, SMT, Ceramic, 0.1uF, 10%25V X7R, 0603	CCFS52	C0603C104K3RAC	31433
C122	Cap, SMT, Ceramic, 0.1uF, 10%25V X7R, 0603	CCFS52	C0603C104K3RAC	31433
C123	Cap, SMT, Ceramic, 0.1uF, 10%25V X7R, 0603	CCFS52	C0603C104K3RAC	31433
C124	Cap, SMT, Ceramic, 0.1uF, 10%25V X7R, 0603	CCFS52	C0603C104K3RAC	31433
C125	Cap,SMT,Tantalum,10uF,10%,35V,2917	CTFS03	T494D106K035AS	31433
C126	Cap,SMT,Ceramic,1uF,10%,25V,,X7R,1206	CCFS10	C1206C105K3RAC	31433
C127	Cap, SMT, Ceramic, 0.1uF, 10%25V X7R, 0603	CCFS52	C0603C104K3RAC	31433
C128	Cap,SMT,Ceramic,1uF,10%,25V,,X7R,1206	CCFS10	C1206C105K3RAC	31433
C129	Cap, SMT, Ceramic, 0.1uF, 10%25V X7R, 0603	CCFS52	C0603C104K3RAC	31433
C130	Cap, SMT, Ceramic, 0.1uF, 10%25V X7R, 0603	CCFS52	C0603C104K3RAC	31433
C131	Cap, SMT, Ceramic, 0.1uF, 10%25V X7R, 0603	CCFS52	C0603C104K3RAC	31433
C132	Cap, SMT, Ceramic, 0.1uF, 10%25V X7R, 0603	CCFS52	C0603C104K3RAC	31433
C133	Cap, SMT, Ceramic, 0.1uF, 10%25V X7R, 0603	CCFS52	C0603C104K3RAC	31433
C134	Cap, SMT, Ceramic, 0.1uF, 10%25V X7R, 0603	CCFS52	C0603C104K3RAC	31433
C135	Cap, SMT, Ceramic, 0.1uF, 10%25V X7R, 0603	CCFS52	C0603C104K3RAC	31433
C136	Cap,SMT,Ceramic,0.01uF,10%,50V,X7R,0603	CCFS04	C0603C103K5RAC	31433
C137	Cap, SMT, Ceramic, 0.1uF, 10%25V X7R, 0603	CCFS52	C0603C104K3RAC	31433
C138	Cap,SMT,Ceramic,10uF,20%,6.3V,X5R,0805	CCFS57	C2012X5R0J106M	54583
C139	Cap,SMT,Ceramic,0.01uF,10%,50V,X7R,0603	CCFS04	C0603C103K5RAC	31433
C140	Cap, SMT, Ceramic, 0.1uF, 10%25V X7R, 0603	CCFS52	C0603C104K3RAC	31433
C141	Cap,SMT,Ceramic,1uF,10%,25V,,X7R,1206	CCFS10	C1206C105K3RAC	31433
C142	Cap, SMT, Ceramic, 0.1uF, 10%25V X7R, 0603	CCFS52	C0603C104K3RAC	31433
C143	Cap, SMT, Ceramic, 0.1uF, 10%25V X7R, 0603	CCFS52	C0603C104K3RAC	31433
C144	Cap, SMT, Ceramic, 0.1uF, 10%25V X7R, 0603	CCFS52	C0603C104K3RAC	31433
C145	Cap,SMT,Ceramic,1uF,10%,25V,,X7R,1206	CCFS10	C1206C105K3RAC	31433
C146	Cap, SMT, Ceramic, 0.1uF, 10%25V X7R, 0603	CCFS52	C0603C104K3RAC	31433
C147	Cap,SMT,Ceramic,0.01uF,10%,50V,X7R,0603	CCFS04	C0603C103K5RAC	31433
C148	Cap, SMT, Ceramic, 0.1uF, 10%25V X7R, 0603	CCFS52	C0603C104K3RAC	31433
C149	Cap,SMT,Ceramic,1uF,10%,25V,,X7R,1206	CCFS10	C1206C105K3RAC	31433
C150	Cap,SMT,Ceramic,10uF,20%,6.3V,X5R,0805	CCFS57	C2012X5R0J106M	54583
C151	Cap, SMT, Ceramic, 0.1uF, 10%25V X7R, 0603	CCFS52	C0603C104K3RAC	31433
C152	Cap, SMT, Ceramic, 0.1uF, 10%25V X7R, 0603	CCFS52	C0603C104K3RAC	31433
C153	Cap,SMT,Ceramic,18pF,2%,50V,C0G,0603	CCFS23	C0603C180G5GAC	31433

Continued from previous page

NAPC160B/01 Control/Interface PWB Assy, NXSeries

REFDES	DESCRIPTION	NAUTEL #	VENDOR #	OEM CODE
C154	Cap, SMT, Ceramic, 10uF, 10%,25V	CCFS62	C3225X5R1E106K	
C155	Cap,SMT,Ceramic,18pF,2%,50V,C0G,0603	CCFS23	C0603C180G5GAC	31433
C156	Cap,SMT,Ceramic,0.01uF,10%,50V,X7R,0603	CCFS04	C0603C103K5RAC	31433
C157	Cap, SMT, Ceramic, 0.1uF, 10%25V X7R, 0603	CCFS52	C0603C104K3RAC	31433
C158	Cap, SMT, Ceramic, 0.1uF, 10%25V X7R, 0603	CCFS52	C0603C104K3RAC	31433
C159	Cap, SMT, Ceramic, 10uF, 10%,25V	CCFS62	C3225X5R1E106K	
C160	Cap, SMT, Ceramic, 0.1uF, 10%25V X7R, 0603	CCFS52	C0603C104K3RAC	31433
C161	Cap,SMT,Tantalum,10uF,10%,35V,2917	CTFS03	T494D106K035AS	31433
C162	Cap, SMT, Ceramic, 0.1uF, 10%25V X7R, 0603	CCFS52	C0603C104K3RAC	31433
C163	Cap, SMT, Ceramic, 0.1uF, 10%25V X7R, 0603	CCFS52	C0603C104K3RAC	31433
C164	Cap, SMT, Ceramic, 0.1uF, 10%25V X7R, 0603	CCFS52	C0603C104K3RAC	31433
C165	Cap,SMT,Ceramic,220pF,2%,50V,C0G,0603	CCFS34	C0603C221G5GAC	31433
C166	Cap,SMT,Ceramic,220pF,2%,50V,C0G,0603	CCFS34	C0603C221G5GAC	31433
C167	Cap, SMT, Ceramic, 0.1uF, 10%25V X7R, 0603	CCFS52	C0603C104K3RAC	31433
C168	Cap, SMT, Ceramic, 0.1uF, 10%25V X7R, 0603	CCFS52	C0603C104K3RAC	31433
C169	Cap, SMT, Ceramic, 0.1uF, 10%25V X7R, 0603	CCFS52	C0603C104K3RAC	31433
C170	Cap, SMT, Ceramic,47uF,20%,6.3V, 1210	CCFS53	C3225X5R0J476M(RoHS)	56289
C171	Cap, SMT, Ceramic, 0.1uF, 10%25V X7R, 0603	CCFS52	C0603C104K3RAC	31433
C172	Cap, SMT, Ceramic, 0.1uF, 10%25V X7R, 0603	CCFS52	C0603C104K3RAC	31433
C173	Cap, SMT, Ceramic, 0.1uF, 10%25V X7R, 0603	CCFS52	C0603C104K3RAC	31433
C174	Cap,SMT,Ceramic,0.1uF,10%,50V,X7R,0805	CCFS07	C0805C104K5RAC	31433
C175	Cap,SMT,Ceramic,1uF,10%,25V,,X7R,1206	CCFS10	C1206C105K3RAC	31433
C176	Cap, SMT, Ceramic, 0.1uF, 10%25V X7R, 0603	CCFS52	C0603C104K3RAC	31433
C177	Cap,SMT,Ceramic,1uF,10%,25V,,X7R,1206	CCFS10	C1206C105K3RAC	31433
C178	Cap, SMT, Ceramic, 0.1uF, 10%25V X7R, 0603	CCFS52	C0603C104K3RAC	31433
C179	Cap,SMT,Ceramic,1uF,10%,25V,,X7R,1206	CCFS10	C1206C105K3RAC	31433
C180	Cap, SMT, Ceramic, 0.1uF, 10%25V X7R, 0603	CCFS52	C0603C104K3RAC	31433
C181	Cap, SMT, Ceramic, 0.1uF, 10%25V X7R, 0603	CCFS52	C0603C104K3RAC	31433
C182	Cap, SMT, Ceramic, 0.1uF, 10%25V X7R, 0603	CCFS52	C0603C104K3RAC	31433
C183	Cap,SMT,Ceramic,0.01uF,10%,50V,X7R,0603	CCFS04	C0603C103K5RAC	31433
C184	Cap,SMT,Tantalum,10uF,10%,35V,2917	CTFS03	T494D106K035AS	31433
C185	Cap,SMT,Ceramic,0.01uF,10%,50V,X7R,0603	CCFS04	C0603C103K5RAC	31433
C186	Cap, SMT, Ceramic, 0.1uF, 10%25V X7R, 0603	CCFS52	C0603C104K3RAC	31433
C187	Cap, SMT, Ceramic, 0.1uF, 10%25V X7R, 0603	CCFS52	C0603C104K3RAC	31433
C188	Cap,SMT,Ceramic,1uF,10%,25V,,X7R,1206	CCFS10	C1206C105K3RAC	31433
C189	Cap,SMT,Tantalum,10uF,10%,35V,2917	CTFS03	T494D106K035AS	31433
C190	Cap,SMT,Ceramic,0.01uF,10%,50V,X7R,0603	CCFS04	C0603C103K5RAC	31433
C191	Cap, SMT, Ceramic, 0.1uF, 10%25V X7R, 0603	CCFS52	C0603C104K3RAC	31433
C192	Cap, SMT, Ceramic, 0.1uF, 10%25V X7R, 0603	CCFS52	C0603C104K3RAC	31433

Continued from previous page

NAPC160B/01 Control/Interface PWB Assy, NXSeries

REFDES	DESCRIPTION	NAUTEL #	VENDOR #	OEM CODE
C193	Cap,SMT,Ceramic,0.01uF,10%,50V,X7R,0603	CCFS04	C0603C103K5RAC	31433
C194	Cap,SMT,Ceramic,0.01uF,10%,50V,X7R,0603	CCFS04	C0603C103K5RAC	31433
C195	Cap, SMT, Ceramic, 0.1uF, 10%25V X7R, 0603	CCFS52	C0603C104K3RAC	31433
C196	Cap,SMT,Ceramic,0.01uF,10%,50V,X7R,0603	CCFS04	C0603C103K5RAC	31433
C197	Cap, SMT, Ceramic, 0.1uF, 10%25V X7R, 0603	CCFS52	C0603C104K3RAC	31433
C198	Cap,SMT,Ceramic,1uF,10%,25V,,X7R,1206	CCFS10	C1206C105K3RAC	31433
C199	Cap, SMT, Ceramic, 0.1uF, 10%25V X7R, 0603	CCFS52	C0603C104K3RAC	31433
C200	Cap, SMT, Ceramic, 0.1uF, 10%25V X7R, 0603	CCFS52	C0603C104K3RAC	31433
C201	Cap,SMT,Ceramic,1uF,10%,25V,,X7R,1206	CCFS10	C1206C105K3RAC	31433
C202	Cap,SMT,Ceramic,1uF,10%,25V,,X7R,1206	CCFS10	C1206C105K3RAC	31433
C203	Cap,SMT,Tantalum,10uF,10%,35V,2917	CTFS03	T494D106K035AS	31433
C204	Cap, SMT, Ceramic, 0.1uF, 10%25V X7R, 0603	CCFS52	C0603C104K3RAC	31433
C205	Cap, SMT, Ceramic, 0.1uF, 10%25V X7R, 0603	CCFS52	C0603C104K3RAC	31433
C206	Cap, SMT, Ceramic, 0.1uF, 10%25V X7R, 0603	CCFS52	C0603C104K3RAC	31433
C207	Cap, SMT, Ceramic, 0.1uF, 10%25V X7R, 0603	CCFS52	C0603C104K3RAC	31433
C208	Cap, SMT, Ceramic, 0.1uF, 10%25V X7R, 0603	CCFS52	C0603C104K3RAC	31433
C209	Cap,SMT,Ceramic,10uF,20%,6.3V,X5R,0805	CCFS57	C2012X5R0J106M	54583
C210	Cap,SMT,Ceramic,0.01uF,10%,50V,X7R,0603	CCFS04	C0603C103K5RAC	31433
C211	Cap, SMT, Ceramic, 0.1uF, 10%25V X7R, 0603	CCFS52	C0603C104K3RAC	31433
C212	Cap,SMT,Ceramic,10uF,20%,6.3V,X5R,0805	CCFS57	C2012X5R0J106M	54583
C213	Cap,SMT,Ceramic,0.01uF,10%,50V,X7R,0603	CCFS04	C0603C103K5RAC	31433
C214	Cap,SMT,Ceramic,0.01uF,10%,50V,X7R,0603	CCFS04	C0603C103K5RAC	31433
C215	Cap, SMT, Ceramic, 0.1uF, 10%25V X7R, 0603	CCFS52	C0603C104K3RAC	31433
C216	Cap,SMT,Ceramic,0.01uF,10%,50V,X7R,0603	CCFS04	C0603C103K5RAC	31433
C217	Cap,SMT,Ceramic,0.01uF,10%,50V,X7R,0603	CCFS04	C0603C103K5RAC	31433
C218	Cap, SMT, Ceramic, 0.1uF, 10%25V X7R, 0603	CCFS52	C0603C104K3RAC	31433
C219	Cap, SMT, Ceramic, 0.1uF, 10%25V X7R, 0603	CCFS52	C0603C104K3RAC	31433
C220	Cap, SMT, Ceramic, 0.1uF, 10%25V X7R, 0603	CCFS52	C0603C104K3RAC	31433
C221	Cap, SMT, Ceramic, 0.1uF, 10%25V X7R, 0603	CCFS52	C0603C104K3RAC	31433
C222	Cap, SMT, Ceramic, 0.1uF, 10%25V X7R, 0603	CCFS52	C0603C104K3RAC	31433
C223	Cap,SMT,Ceramic,1uF,10%,25V,,X7R,1206	CCFS10	C1206C105K3RAC	31433
C224	Cap, SMT, Ceramic, 0.1uF, 10%25V X7R, 0603	CCFS52	C0603C104K3RAC	31433
C225	Cap, SMT, Ceramic, 0.1uF, 10%25V X7R, 0603	CCFS52	C0603C104K3RAC	31433
C226	Cap,SMT,Ceramic,0.01uF,10%,50V,X7R,0603	CCFS04	C0603C103K5RAC	31433
C227	Cap,SMT,Ceramic,0.01uF,10%,50V,X7R,0603	CCFS04	C0603C103K5RAC	31433
C228	Cap, SMT, Ceramic, 0.1uF, 10%25V X7R, 0603	CCFS52	C0603C104K3RAC	31433
C229	Cap,SMT,Ceramic,0.01uF,10%,50V,X7R,0603	CCFS04	C0603C103K5RAC	31433
C230	Cap,SMT,Ceramic,1uF,10%,25V,,X7R,1206	CCFS10	C1206C105K3RAC	31433
C231	Cap,SMT,Ceramic,0.01uF,10%,50V,X7R,0603	CCFS04	C0603C103K5RAC	31433

Continued from previous page

NAPC160B/01 Control/Interface PWB Assy, NXSeries

REFDES	DESCRIPTION	NAUTEL #	VENDOR #	OEM CODE
C232	Cap,SMT,Ceramic,0.01uF,10%,50V,X7R,0603	CCFS04	C0603C103K5RAC	31433
C233	Cap,SMT,Ceramic,0.01uF,10%,50V,X7R,0603	CCFS04	C0603C103K5RAC	31433
C234	Cap,SMT,Ceramic,0.01uF,10%,50V,X7R,0603	CCFS04	C0603C103K5RAC	31433
C235	Cap,SMT,Ceramic,0.01uF,10%,50V,X7R,0603	CCFS04	C0603C103K5RAC	31433
C236	Cap,SMT,Ceramic,0.01uF,10%,50V,X7R,0603	CCFS04	C0603C103K5RAC	31433
C237	Cap,SMT,Ceramic,0.01uF,10%,50V,X7R,0603	CCFS04	C0603C103K5RAC	31433
C238	Cap,SMT,Ceramic,0.01uF,10%,50V,X7R,0603	CCFS04	C0603C103K5RAC	31433
C239	Cap,SMT,Ceramic,0.01uF,10%,50V,X7R,0603	CCFS04	C0603C103K5RAC	31433
C240	Cap,SMT,Ceramic,0.01uF,10%,50V,X7R,0603	CCFS04	C0603C103K5RAC	31433
C241	Cap,SMT,Ceramic,0.01uF,10%,50V,X7R,0603	CCFS04	C0603C103K5RAC	31433
C242	Cap,SMT,Ceramic,0.01uF,10%,50V,X7R,0603	CCFS04	C0603C103K5RAC	31433
C243	Cap,SMT,Ceramic,0.01uF,10%,50V,X7R,0603	CCFS04	C0603C103K5RAC	31433
C244	Cap,SMT,Ceramic,0.01uF,10%,50V,X7R,0603	CCFS04	C0603C103K5RAC	31433
C245	Cap,SMT,Ceramic,0.01uF,10%,50V,X7R,0603	CCFS04	C0603C103K5RAC	31433
C246	Cap,SMT,Ceramic,0.01uF,10%,50V,X7R,0603	CCFS04	C0603C103K5RAC	31433
C247	Cap,SMT,Ceramic,0.01uF,10%,50V,X7R,0603	CCFS04	C0603C103K5RAC	31433
C248	Cap,SMT,Ceramic,0.1uF,10%,50V,X7R,0805	CCFS07	C0805C104K5RAC	31433
C249	Cap,SMT,Ceramic,0.1uF,10%,50V,X7R,0805	CCFS07	C0805C104K5RAC	31433
C250	Cap,SMT,Ceramic,0.1uF,10%,50V,X7R,0805	CCFS07	C0805C104K5RAC	31433
C251	Cap,SMT,Ceramic,0.1uF,10%,50V,X7R,0805	CCFS07	C0805C104K5RAC	31433
C252	Cap,SMT,Ceramic,0.1uF,10%,50V,X7R,0805	CCFS07	C0805C104K5RAC	31433
C253	Cap,SMT,Ceramic,0.1uF,10%,50V,X7R,0805	CCFS07	C0805C104K5RAC	31433
C254	Cap,SMT,Ceramic,0.1uF,10%,50V,X7R,0805	CCFS07	C0805C104K5RAC	31433
C255	Cap,SMT,Ceramic,0.1uF,10%,50V,X7R,0805	CCFS07	C0805C104K5RAC	31433
C256	Cap,SMT,Ceramic,0.1uF,10%,50V,X7R,0805	CCFS07	C0805C104K5RAC	31433
C257	Cap,SMT,Ceramic,0.1uF,10%,50V,X7R,0805	CCFS07	C0805C104K5RAC	31433
C258	Cap,SMT,Ceramic,0.1uF,10%,50V,X7R,0805	CCFS07	C0805C104K5RAC	31433
C259	Cap,SMT,Ceramic,0.1uF,10%,50V,X7R,0805	CCFS07	C0805C104K5RAC	31433
C260	Cap,SMT,Ceramic,0.1uF,10%,50V,X7R,0805	CCFS07	C0805C104K5RAC	31433
C261	Cap,SMT,Ceramic,0.1uF,10%,50V,X7R,0805	CCFS07	C0805C104K5RAC	31433
C262	Cap,SMT,Ceramic,0.1uF,10%,50V,X7R,0805	CCFS07	C0805C104K5RAC	31433
C263	Cap,SMT,Ceramic,0.1uF,10%,50V,X7R,0805	CCFS07	C0805C104K5RAC	31433
C264	Cap, SMT, Ceramic, 0.1uF, 10%25V X7R, 0603	CCFS52	C0603C104K3RAC	31433
C265	Cap, SMT, Ceramic, 0.1uF, 10%25V X7R, 0603	CCFS52	C0603C104K3RAC	31433
C266	Cap, SMT, Ceramic, 0.1uF, 10%25V X7R, 0603	CCFS52	C0603C104K3RAC	31433
C267	Cap, SMT, Ceramic, 0.1uF, 10%25V X7R, 0603	CCFS52	C0603C104K3RAC	31433
C268	Cap,SMT,Ceramic,1uF,10%,25V,,X7R,1206	CCFS10	C1206C105K3RAC	31433
C269	Cap, SMT, Ceramic, 0.1uF, 10%25V X7R, 0603	CCFS52	C0603C104K3RAC	31433
C270	Cap, SMT, Ceramic, 0.1uF, 10%25V X7R, 0603	CCFS52	C0603C104K3RAC	31433

Continued from previous page

NAPC160B/01 Control/Interface PWB Assy, NXSeries

REFDES	DESCRIPTION	NAUTEL #	VENDOR #	OEM CODE
C271	Cap, SMT, Ceramic, 0.1uF, 10%25V X7R, 0603	CCFS52	C0603C104K3RAC	31433
C272	Cap, SMT, Ceramic, 0.1uF, 10%25V X7R, 0603	CCFS52	C0603C104K3RAC	31433
C273	Cap, SMT, Ceramic, 0.1uF, 10%25V X7R, 0603	CCFS52	C0603C104K3RAC	31433
C274	Cap, SMT, Ceramic, 0.1uF, 10%25V X7R, 0603	CCFS52	C0603C104K3RAC	31433
C275	Not Used	-	NOT USED	37338
C276	Not Used	-	NOT USED	37338
C277	Cap,SMT,Ceramic,0.01uF,10%,50V,X7R,0603	CCFS04	C0603C103K5RAC	31433
CR01	Suppressor, Transient Voltage,SMT 60V Clamp	QR70	0603ESDA-TR1(RoHS)	71400
CR02	Suppressor, Transient Voltage,SMT 60V Clamp	QR70	0603ESDA-TR1(RoHS)	71400
CR03	Diode, SMT, Zener, 5.6V, 5%,3W, SMB	QDZ01	1SMB5919BT3	04713
CR04	Diode,SMT,Switching,250V,0.2A,SOD-323	QDRS01	BAS21HT1(STATIC)	04713
CR05	Diode,SMT,Switching,250V,0.2A,SOD-323	QDRS01	BAS21HT1(STATIC)	04713
CR06	Diode,SMT,Switching,250V,0.2A,SOD-323	QDRS01	BAS21HT1(STATIC)	04713
CR07	Diode,SMT,Switching,250V,0.2A,SOD-323	QDRS01	BAS21HT1(STATIC)	04713
CR08	Diode,SMT,Switching,250V,0.2A,SOD-323	QDRS01	BAS21HT1(STATIC)	04713
CR09	Diode,SMT,Switching,250V,0.2A,SOD-323	QDRS01	BAS21HT1(STATIC)	04713
CR10	Diode,SMT,Switching,250V,0.2A,SOD-323	QDRS01	BAS21HT1(STATIC)	04713
CR11	Diode,SMT,Switching,250V,0.2A,SOD-323	QDRS01	BAS21HT1(STATIC)	04713
CR12	Diode,SMT,Switching,250V,0.2A,SOD-323	QDRS01	BAS21HT1(STATIC)	04713
CR13	Suppressor, Transient Voltage,SMT 60V Clamp	QR70	0603ESDA-TR1(RoHS)	71400
CR14	Suppressor, Transient Voltage,SMT 60V Clamp	QR70	0603ESDA-TR1(RoHS)	71400
CR15	Diode, SMT, Shottky, 70V, 15mA, SOD-123	QK53	1N5711W-7-F(STATIC)(RoHS)	12060
CR16	Diode, SMT, Shottky, 70V, 15mA, SOD-123	QK53	1N5711W-7-F(STATIC)(RoHS)	12060
CR17	Diode, SMT, Shottky, 70V, 15mA, SOD-123	QK53	1N5711W-7-F(STATIC)(RoHS)	12060
CR18	Diode, SMT, Shottky, 70V, 15mA, SOD-123	QK53	1N5711W-7-F(STATIC)(RoHS)	12060
CR19	Diode, SMT, Shottky, 70V, 15mA, SOD-123	QK53	1N5711W-7-F(STATIC)(RoHS)	12060
CR20	Diode,SMT,Switching,250V,0.2A,SOD-323	QDRS01	BAS21HT1(STATIC)	04713
CR21	Suppressor, Transient Voltage,SMT 60V Clamp	QR70	0603ESDA-TR1(RoHS)	71400
CR22	Suppressor, Transient Voltage,SMT 60V Clamp	QR70	0603ESDA-TR1(RoHS)	71400
CR23	Suppressor, Transient Voltage,SMT 60V Clamp	QR70	0603ESDA-TR1(RoHS)	71400
CR24	Suppressor, Transient Voltage,SMT 60V Clamp	QR70	0603ESDA-TR1(RoHS)	71400
CR25	Suppressor, Transient Voltage,SMT 60V Clamp	QR70	0603ESDA-TR1(RoHS)	71400

Continued from previous page

NAPC160B/01 Control/Interface PWB Assy, NXSeries

REFDES	DESCRIPTION	NAUTEL #	VENDOR #	OEM CODE
CR26	Suppressor, Transient Voltage,SMT 60V Clamp	QR70	0603ESDA-TR1(RoHS)	71400
CR27	Suppressor, Transient Voltage,SMT 60V Clamp	QR70	0603ESDA-TR1(RoHS)	71400
CR28	Suppressor, Transient Voltage,SMT 60V Clamp	QR70	0603ESDA-TR1(RoHS)	71400
CR29	Suppressor, Transient Voltage,SMT 60V Clamp	QR70	0603ESDA-TR1(RoHS)	71400
CR30	Suppressor, Transient Voltage,SMT 60V Clamp	QR70	0603ESDA-TR1(RoHS)	71400
CR31	Diode,SMT,Zener,39V,5%,3W,SMB	QDZS04	1SMB5939BT3	04713
CR32	Diode,SMT,Switching,250V,0.2A,SOD-323	QDRS01	BAS21HT1(STATIC)	04713
CR33	Diode,SMT,Switching,250V,0.2A,SOD-323	QDRS01	BAS21HT1(STATIC)	04713
CR34	Diode,SMT,Switching,250V,0.2A,SOD-323	QDRS01	BAS21HT1(STATIC)	04713
CR35	Diode,SMT,Switching,250V,0.2A,SOD-323	QDRS01	BAS21HT1(STATIC)	04713
CR36	Diode,SMT,Switching,250V,0.2A,SOD-323	QDRS01	BAS21HT1(STATIC)	04713
CR37	Diode,SMT,Switching,250V,0.2A,SOD-323	QDRS01	BAS21HT1(STATIC)	04713
CR38	Diode,SMT,Switching,250V,0.2A,SOD-323	QDRS01	BAS21HT1(STATIC)	04713
CR39	Diode,SMT,Schottky,30V,0.2A,SOD-323	QDSS01	BAT54HT1(STATIC)	04713
CR40	Diode,SMT,Schottky,30V,0.2A,SOD-323	QDSS01	BAT54HT1(STATIC)	04713
CR41	Diode,SMT,Transient Suppr,10V,SMB	QM48	1SMB10CAT3	04713
CR42	Diode,SMT,Switching,250V,0.2A,SOD-323	QDRS01	BAS21HT1(STATIC)	04713
CR43	Diode,SMT,Switching,250V,0.2A,SOD-323	QDRS01	BAS21HT1(STATIC)	04713
CR44	Diode,SMT,Switching,250V,0.2A,SOD-323	QDRS01	BAS21HT1(STATIC)	04713
CR45	Diode,SMT,Switching,250V,0.2A,SOD-323	QDRS01	BAS21HT1(STATIC)	04713
CR46	Diode,SMT,Transient Suppr,10V,SMB	QM48	1SMB10CAT3	04713
CR47	Diode,SMT,Switching,250V,0.2A,SOD-323	QDRS01	BAS21HT1(STATIC)	04713
CR48	Suppressor, Transient Voltage,SMT 60V Clamp	QR70	0603ESDA-TR1(RoHS)	71400
CR49	Diode,SMT,Switching,250V,0.2A,SOD-323	QDRS01	BAS21HT1(STATIC)	04713
CR50	Suppressor, Transient Voltage,SMT 60V Clamp	QR70	0603ESDA-TR1(RoHS)	71400
CR51	Diode,SMT,Switching,250V,0.2A,SOD-323	QDRS01	BAS21HT1(STATIC)	04713
CR52	Suppressor, Transient Voltage,SMT 60V Clamp	QR70	0603ESDA-TR1(RoHS)	71400
CR53	Diode,SMT,Switching,250V,0.2A,SOD-323	QDRS01	BAS21HT1(STATIC)	04713
CR54	Suppressor, Transient Voltage,SMT 60V Clamp	QR70	0603ESDA-TR1(RoHS)	71400
CR55	Diode,SMT,Switching,250V,0.2A,SOD-323	QDRS01	BAS21HT1(STATIC)	04713
CR56	Suppressor, Transient Voltage,SMT 60V Clamp	QR70	0603ESDA-TR1(RoHS)	71400
CR57	Diode,SMT,Switching,250V,0.2A,SOD-323	QDRS01	BAS21HT1(STATIC)	04713
CR58	Diode,SMT,Zener,39V,5%,3W,SMB	QDZS04	1SMB5939BT3	04713
CR59	Diode,SMT,Zener,39V,5%,3W,SMB	QDZS04	1SMB5939BT3	04713

Continued from previous page

REFDES	DESCRIPTION	NAUTEL #	VENDOR #	OEM CODE
CR60	Diode,SMT,Zener,39V,5%,3W,SMB	QDZS04	1SMB5939BT3	04713
CR61	Diode,SMT,Switching,250V,0.2A,SOD-323	QDRS01	BAS21HT1(STATIC)	04713
CR62	Diode,SMT,Switching,250V,0.2A,SOD-323	QDRS01	BAS21HT1(STATIC)	04713
CR63	Diode,SMT,Switching,250V,0.2A,SOD-323	QDRS01	BAS21HT1(STATIC)	04713
CR64	Diode,SMT,Switching,250V,0.2A,SOD-323	QDRS01	BAS21HT1(STATIC)	04713
CR65	Diode,SMT,Switching,250V,0.2A,SOD-323	QDRS01	BAS21HT1(STATIC)	04713
CR66	Diode,SMT,Switching,250V,0.2A,SOD-323	QDRS01	BAS21HT1(STATIC)	04713
CR67	Diode,SMT,Switching,250V,0.2A,SOD-323	QDRS01	BAS21HT1(STATIC)	04713
CR68	Diode,SMT,Switching,250V,0.2A,SOD-323	QDRS01	BAS21HT1(STATIC)	04713
CR69	Diode,SMT,Switching,250V,0.2A,SOD-323	QDRS01	BAS21HT1(STATIC)	04713
CR70	Diode,SMT,Switching,250V,0.2A,SOD-323	QDRS01	BAS21HT1(STATIC)	04713
CR71	Diode,SMT,Switching,250V,0.2A,SOD-323	QDRS01	BAS21HT1(STATIC)	04713
CR72	Diode,SMT,Switching,250V,0.2A,SOD-323	QDRS01	BAS21HT1(STATIC)	04713
CR73	Diode,SMT,Switching,250V,0.2A,SOD-323	QDRS01	BAS21HT1(STATIC)	04713
CR74	Diode,SMT,Switching,250V,0.2A,SOD-323	QDRS01	BAS21HT1(STATIC)	04713
CR75	Diode,SMT,Switching,250V,0.2A,SOD-323	QDRS01	BAS21HT1(STATIC)	04713
CR76	Diode,SMT,Switching,250V,0.2A,SOD-323	QDRS01	BAS21HT1(STATIC)	04713
CR77	Suppressor, Transient Voltage,SMT 60V Clamp	QR70	0603ESDA-TR1(RoHS)	71400
CR78	Suppressor, Transient Voltage,SMT 60V Clamp	QR70	0603ESDA-TR1(RoHS)	71400
CR79	Suppressor, Transient Voltage,SMT 60V Clamp	QR70	0603ESDA-TR1(RoHS)	71400
CR80	Suppressor, Transient Voltage,SMT 60V Clamp	QR70	0603ESDA-TR1(RoHS)	71400
DS01	Diode, SMT, LED, Amber,(592nm), 0603	QDLS07	598-8040-107F(STATIC)(RoHS)	83330
DS02	Diode, SMT, LED, Amber,(592nm), 0603	QDLS07	598-8040-107F(STATIC)(RoHS)	83330
DS03	Diode, SMT, LED, Amber,(592nm), 0603	QDLS07	598-8040-107F(STATIC)(RoHS)	83330
DS04	Diode, SMT, LED, Amber,(592nm), 0603	QDLS07	598-8040-107F(STATIC)(RoHS)	83330
DS05	Diode, SMT, LED, Amber,(592nm), 0603	QDLS07	598-8040-107F(STATIC)(RoHS)	83330
DS06	Diode, SMT, LED, Amber,(592nm), 0603	QDLS07	598-8040-107F(STATIC)(RoHS)	83330
DS07	Diode, SMT, LED, Red, (660nm),0603	QDLS03	597-5112-402(STATIC)	83330
DS08	Diode, SMT, LED, Green,(560nm), 0603	QDLS01	597-5312-402F(STATIC)(RoHS)	83330
DS09	Diode, SMT, LED, Green,(560nm), 0603	QDLS01	597-5312-402F(STATIC)(RoHS)	83330
DS10	Diode, SMT, LED, Green,(560nm), 0603	QDLS01	597-5312-402F(STATIC)(RoHS)	83330
DS11	Diode, SMT, LED, Green,(560nm), 0603	QDLS01	597-5312-402F(STATIC)(RoHS)	83330

Continued from previous page

NAPC160B/01 Control/Interface PWB Assy, NXSeries

REFDES	DESCRIPTION	NAUTEL #	VENDOR #	OEM CODE
DS12	Diode, SMT, LED, Green,(560nm), 0603	QDLS01	597-5312-402F(STATIC)(RoHS)	83330
DS13	Diode, SMT, LED, Green,(560nm), 0603	QDLS01	597-5312-402F(STATIC)(RoHS)	83330
DS14	Diode, SMT, LED, Green,(560nm), 0603	QDLS01	597-5312-402F(STATIC)(RoHS)	83330
DS15	Diode, SMT, LED, Green,(560nm), 0603	QDLS01	597-5312-402F(STATIC)(RoHS)	83330
DS16	Diode, SMT, LED, Green,(560nm), 0603	QDLS01	597-5312-402F(STATIC)(RoHS)	83330
DS17	Diode, SMT, LED, Green,(560nm), 0603	QDLS01	597-5312-402F(STATIC)(RoHS)	83330
DS18	Diode, SMT, LED, Green,(560nm), 0603	QDLS01	597-5312-402F(STATIC)(RoHS)	83330
E01	Conn, Post Shunt, 2 Pos, .10 Centreline	JQ15	390088-2	09482
E02	Not Used	-	NOT USED	37338
E03	Conn, Post Shunt, 2 Pos, .10 Centreline	JQ15	390088-2	09482
J01	Conn, Plug, D-Sub, 25 pin, PWB Mt	JS12	K22X-B25P-NJ	63590
J02	Conn, Socket, D-Sub, 9 pin, PWB Mt	JQ34	K22-E9S-NJ	KYCON
J03	Conn, Dual, D-Sub, F/M, 9 pin, Rt. Angle, PWB	JT121	178-009-313R571(RoHS)	1L3S8
J04	Not Used	-	NOT USED	37338
J05	Conn, Socket, D-Sub, 25 pin, PWB Mt	JS13	K22-B25S-NJ	22421
J06	Not Used	-	NOT USED	37338
J07	Conn, BNC, Recept, 50ohm,Insul, Rt Angle	JT61	227161-6	09482
J08	Conn, BNC, Recept, 50ohm,Insul, Rt Angle	JT61	227161-6	09482
J09	Not Used	-	NOT USED	37338
J10	Conn,3-pin,PWB Mount, Fem, XLR	JT87	NC3FAH-2	NEUTRIK A
J11	Conn,3-pin,PWB Mount, Fem, XLR	JT87	NC3FAH-2	NEUTRIK A
J12	Conn,3-pin,PWB Mount, Fem, XLR	JT87	NC3FAH-2	NEUTRIK A
J13	Conn, Socket, D-Sub, 9 pin, PWB Mt	JQ34	K22-E9S-NJ	KYCON
J14	Connector,Modular,2x4,RJ45,Jack	JT90	569262-1	AMP/TYCO
J15	Connector,Modular,2x4,RJ45,Jack	JT90	569262-1	AMP/TYCO
J16	Conn, Socket, D-Sub, 25 pin, PWB Mt	JS13	K22-B25S-NJ	22421
J17	Conn, Plug, D-Sub, 25 pin, PWB Mt	JS12	K22X-B25P-NJ	63590
J18	Conn, Socket, D-Sub, 25 pin, PWB Mt	JS13	K22-B25S-NJ	22421
J19	Conn, Plug, D-Sub, 25 pin, PWB Mt	JS12	K22X-B25P-NJ	63590
J20	Conn, Modular Jack, RJ45, Shld, Side, PWB, 50u	JM44	556591-1	09482
J21	Conn, Header, Ribbon Cbl, 10-Pin	JQ54	103308-1	00779
J22	Connector, Dual, D-Sub, F/F,9 pin, Rt. Angle, PWB	JT99	1734285-3(RoHS)	09482
J23	Conn, Socket, D-Sub, 25 pin, PWB Mt	JS13	K22-B25S-NJ	22421
J24	Conn, Plug, D-Sub, 25 pin, PWB Mt	JS12	K22X-B25P-NJ	63590
J25	Conn, Header,Square Post,Gold,Dual,40-pin	JF47	4-102973-0	09482

Continued from previous page

NAPC160B/01 Control/Interface PWB Assy, NXSeries

REFDES	DESCRIPTION	NAUTEL #	VENDOR #	OEM CODE
J26	Conn, Header,Square Post,Gold,Dual,40-pin	JF47	4-102973-0	09482
J27	Conn, Modular Jack, RJ45, Shld, Side, PWB, 50u	JM44	556591-1	09482
L01	Inductor, Choke, 2.5 Turns, JMtl	LA16	82-152-J	33062
L02	Inductor, Choke, 2.5 Turns, JMtl	LA16	82-152-J	33062
L03	Inductor, Choke, 2.5 Turns, JMtl	LA16	82-152-J	33062
L04	Inductor, Choke, 2.5 Turns, JMtl	LA16	82-152-J	33062
L05	Inductor, Choke, 2.5 Turns, JMtl	LA16	82-152-J	33062
L06	Inductor, Choke, 2.5 Turns, JMtl	LA16	82-152-J	33062
L07	Inductor, Choke, 2.5 Turns, JMtl	LA16	82-152-J	33062
L08	Choke,SMT,Common Mode,2200 ohm,200mA,1206	LS22	DLW31SN222SQ2L(ROHS)	3EH09
L09	Choke,SMT,Common Mode,2200 ohm,200mA,1206	LS22	DLW31SN222SQ2L(ROHS)	3EH09
L10	Choke,SMT,Common Mode,2200 ohm,200mA,1206	LS22	DLW31SN222SQ2L(ROHS)	3EH09
L11	Choke,SMT,Common Mode,2200 ohm,200mA,1206	LS22	DLW31SN222SQ2L(ROHS)	3EH09
L12	Choke,SMT,Common Mode,2200 ohm,200mA,1206	LS22	DLW31SN222SQ2L(ROHS)	3EH09
L13	Inductor, Choke, 2.5 Turns, JMtl	LA16	82-152-J	33062
L14	Inductor, SMT, Choke, 600ohms,2A, 0805	LCFS01	ILHB0805RK601V	56845
L15	Inductor, SMT, Choke, 600ohms,2A, 0805	LCFS01	ILHB0805RK601V	56845
L16	Inductor, SMT, Choke, 600ohms,2A, 0805	LCFS01	ILHB0805RK601V	56845
L17	Inductor, Choke, 2.5 Turns, JMtl	LA16	82-152-J	33062
LS01	Alarm, Audio Piezoelectric,Sonalert	LP30	MSR516N	90201
Q01	Transistor,SMT,NPN,Switch/Amp,SOT-23	QBNS01	MMBT4401LT1(STATIC)	04713
Q02	Not Used	-	NOT USED	37338
Q03	Not Used	-	NOT USED	37338
R001	Resistor,SMT,MF,49.9R,1%,1/10W0603	RAE34	RK73H1JT49R9F	59124
R002	Resistor,SMT,MF,49.9R,1%,1/10W0603	RAE34	RK73H1JT49R9F	59124
R003	Not Used	-	NOT USED	37338
R004	Resistor, SMT, MF, 121K Ohms,1% 1/4W	RAE02	RK73H2BL1213F	59124
R005	Resistor, SMT, MF, 121K Ohms,1% 1/4W	RAE02	RK73H2BL1213F	59124
R006	Resistor,SMT,MF,825ohms,1%,1/10W,0603	RFFS37	RK73H1JLTD8250F	59124
R007	Resistor, SMT, MF, 121K Ohms,1% 1/4W	RAE02	RK73H2BL1213F	59124
R008	Resistor, SMT, MF, 121K Ohms,1% 1/4W	RAE02	RK73H2BL1213F	59124
R009	Resistor,SMT,MF,1000ohms,1%,1/10W,0603	RFFS38	RK73H1JLTD1001F	59124
R010	Resistor,SMT,MF,681ohms,1%,1/10W,0603	RFFS36	RK73H1JLTD6810F	59124
R011	Resistor,SMT,MF,1000ohms,1%,1/10W,0603	RFFS38	RK73H1JLTD1001F	59124
R012	Resistor,SMT,MF,681ohms,1%,1/10W,0603	RFFS36	RK73H1JLTD6810F	59124
R013	Resistor,SMT,MF,1000ohms,1%,1/10W,0603	RFFS38	RK73H1JLTD1001F	59124

Continued from previous page

NAPC160B/01 Control/Interface PWB Assy, NXSeries

REFDES	DESCRIPTION	NAUTEL #	VENDOR #	OEM CODE
R014	Resistor,SMT,MF,10.0Kohms,1%,1/10W,0603	RFFS50	RK73H1JLTD1002F	59124
R015	Resistor,SMT,MF,4750ohms,1%,1/10W,0603	RFFS46	RK73H1JLTD4751F	59124
R016	Resistor,SMT,MF,100ohms,1%,1/10W,0603	RFFS26	RK73H1JLTD1000F	59124
R017	Not Used	-	NOT USED	37338
R018	Not Used	-	NOT USED	37338
R019	Resistor,SMT,MF,68.1Kohms,1%,1/10W,0603	RFFS60	RK73H1JLTD6812F	59124
R020	Resistor,SMT,MF,6810ohms,1%,1/10W,0603	RFFS48	RK73H1JLTD6811F	59124
R021	Not Used	-	NOT USED	37338
R022	Not Used	-	NOT USED	37338
R023	Resistor,SMT,MF,10.0Kohms,1%,1/10W,0603	RFFS50	RK73H1JLTD1002F	59124
R024	Resistor,SMT,MF,10.0ohms,1%,1/10W,0603	RFFS14	RK73H1JLTD10R0F	59124
R025	Resistor,SMT,MF,1000ohms,1%,1/10W,0603	RFFS38	RK73H1JLTD1001F	59124
R026	Resistor,SMT,MF,1000ohms,1%,1/10W,0603	RFFS38	RK73H1JLTD1001F	59124
R027	Resistor,SMT,MF,1000ohms,1%,1/10W,0603	RFFS38	RK73H1JLTD1001F	59124
R028	Resistor,SMT,MF,1000ohms,1%,1/10W,0603	RFFS38	RK73H1JLTD1001F	59124
R029	Resistor,SMT,MF,1000ohms,1%,1/10W,0603	RFFS38	RK73H1JLTD1001F	59124
R030	Resistor,SMT,MF,1000ohms,1%,1/10W,0603	RFFS38	RK73H1JLTD1001F	59124
R031	Resistor,SMT,MF,1000ohms,1%,1/10W,0603	RFFS38	RK73H1JLTD1001F	59124
R032	Resistor,SMT,MF,1000ohms,1%,1/10W,0603	RFFS38	RK73H1JLTD1001F	59124
R033	Resistor,SMT,MF,1000ohms,1%,1/10W,0603	RFFS38	RK73H1JLTD1001F	59124
R034	Resistor,SMT,MF,10.0Kohms,1%,1/10W,0603	RFFS50	RK73H1JLTD1002F	59124
R035	Resistor,SMT,MF,1.00Mohms,1%,1/10W,0603	RFFS74	RK73H1JLTD1004F	59124
R036	Resistor,SMT,MF,1000ohms,1%,1/10W,0603	RFFS38	RK73H1JLTD1001F	59124
R037	Resistor,SMT,MF,1000ohms,1%,1/10W,0603	RFFS38	RK73H1JLTD1001F	59124
R038	Resistor,SMT,MF,1.00Mohms,1%,1/10W,0603	RFFS74	RK73H1JLTD1004F	59124
R039	Resistor,SMT,MF,1000ohms,1%,1/10W,0603	RFFS38	RK73H1JLTD1001F	59124
R040	Resistor,SMT,MF,1000ohms,1%,1/10W,0603	RFFS38	RK73H1JLTD1001F	59124
R041	Resistor,SMT,MF,1.00Mohms,1%,1/10W,0603	RFFS74	RK73H1JLTD1004F	59124
R042	Resistor,SMT,MF,1000ohms,1%,1/10W,0603	RFFS38	RK73H1JLTD1001F	59124
R043	Resistor,SMT,MF,1000ohms,1%,1/10W,0603	RFFS38	RK73H1JLTD1001F	59124
R044	Resistor,SMT,MF,475ohms,1%,1/10W,0603	RFFS34	RK73H1JLTD4750F	59124
R045	Resistor,SMT,MF,475ohms,1%,1/10W,0603	RFFS34	RK73H1JLTD4750F	59124
R046	Resistor,SMT,MF,475ohms,1%,1/10W,0603	RFFS34	RK73H1JLTD4750F	59124
R047	Resistor,SMT,MF,475ohms,1%,1/10W,0603	RFFS34	RK73H1JLTD4750F	59124
R048	Resistor,SMT,MF,475ohms,1%,1/10W,0603	RFFS34	RK73H1JLTD4750F	59124
R049	Resistor,SMT,MF,475ohms,1%,1/10W,0603	RFFS34	RK73H1JLTD4750F	59124
R050	Resistor,SMT,MF,475ohms,1%,1/10W,0603	RFFS34	RK73H1JLTD4750F	59124
R051	Resistor,SMT,MF,475ohms,1%,1/10W,0603	RFFS34	RK73H1JLTD4750F	59124
R052	Resistor,SMT,MF,475ohms,1%,1/10W,0603	RFFS34	RK73H1JLTD4750F	59124

Continued from previous page

NAPC160B/01 Control/Interface PWB Assy, NXSeries

REFDES	DESCRIPTION	NAUTEL #	VENDOR #	OEM CODE
R053	Resistor,SMT,MF,475ohms,1%,1/10W,0603	RFFS34	RK73H1JLTD4750F	59124
R054	Resistor,SMT,MF,475ohms,1%,1/10W,0603	RFFS34	RK73H1JLTD4750F	59124
R055	Resistor,SMT,MF,1000ohms,1%,1/10W,0603	RFFS38	RK73H1JLTD1001F	59124
R056	Resistor,SMT,MF,1.00Mohms,1%,1/10W,0603	RFFS74	RK73H1JLTD1004F	59124
R057	Resistor,SMT,MF,1.00Mohms,1%,1/10W,0603	RFFS74	RK73H1JLTD1004F	59124
R058	Resistor,SMT,MF,1.00Mohms,1%,1/10W,0603	RFFS74	RK73H1JLTD1004F	59124
R059	Resistor,SMT,MF,1.00Mohms,1%,1/10W,0603	RFFS74	RK73H1JLTD1004F	59124
R060	Resistor,SMT,MF,1000ohms,1%,1/10W,0603	RFFS38	RK73H1JLTD1001F	59124
R061	Resistor,SMT,MF,49.9R,1%,1/10W0603	RAE34	RK73H1JT49R9F	59124
R062	Resistor,SMT,MF,49.9R,1%,1/10W0603	RAE34	RK73H1JT49R9F	59124
R063	Resistor,SMT,MF,10.0Kohms,1%,1/10W,0603	RFFS50	RK73H1JLTD1002F	59124
R064	Resistor,SMT,MF,10.0Kohms,1%,1/10W,0603	RFFS50	RK73H1JLTD1002F	59124
R065	Resistor,SMT,MF,1.00Mohms,1%,1/10W,0603	RFFS74	RK73H1JLTD1004F	59124
R066	Resistor,SMT,MF,1000ohms,1%,1/10W,0603	RFFS38	RK73H1JLTD1001F	59124
R067	Resistor,SMT,MF,1.00Mohms,1%,1/10W,0603	RFFS74	RK73H1JLTD1004F	59124
R068	Resistor,SMT,MF,825ohms,1%,1/10W,0603	RFFS37	RK73H1JLTD8250F	59124
R069	Resistor,SMT,MF,1000ohms,1%,1/10W,0603	RFFS38	RK73H1JLTD1001F	59124
R070	Resistor,SMT,MF,10.0Kohms,1%,1/10W,0603	RFFS50	RK73H1JLTD1002F	59124
R071	Resistor,SMT,MF,221ohms,1%,1/10W,0603	RFFS30	RK73H1JLTD2210F	59124
R072	Resistor,SMT,MF,4750ohms,1%,1/10W,0603	RFFS46	RK73H1JLTD4751F	59124
R073	Resistor,SMT,MF,1000ohms,1%,1/10W,0603	RFFS38	RK73H1JLTD1001F	59124
R074	Resistor,SMT,MF,10.0Kohms,1%,1/10W,0603	RFFS50	RK73H1JLTD1002F	59124
R075	Resistor,SMT,MF,10.0Kohms,1%,1/10W,0603	RFFS50	RK73H1JLTD1002F	59124
R076	Resistor,SMT,MF,10.0Kohms,1%,1/10W,0603	RFFS50	RK73H1JLTD1002F	59124
R077	Resistor,SMT,MF,4750ohms,1%,1/10W,0603	RFFS46	RK73H1JLTD4751F	59124
R078	Resistor, Variable, Film, 10Kohms, 1/2W	RW39	3299W-1-103	80294
R079	Resistor,SMT,MF,4750ohms,1%,1/10W,0603	RFFS46	RK73H1JLTD4751F	59124
R080	Resistor,SMT,MF,15.0Kohms,1%,1/10W,0603	RFFS52	RK73H1JLTD1502F	59124
R081	Resistor,SMT,MF,10.0Kohms,1%,1/10W,0603	RFFS50	RK73H1JLTD1002F	59124
R082	Resistor,SMT,MF,10.0Kohms,1%,1/10W,0603	RFFS50	RK73H1JLTD1002F	59124
R083	Resistor,SMT,MF,4750ohms,1%,1/10W,0603	RFFS46	RK73H1JLTD4751F	59124
R084	Not Used	-	NOT USED	37338
R085	Resistor,SMT,MF,3320ohms,1%,1/10W,0603	RFFS44	RK73H1JLTD3321F	59124
R086	Not Used	-	NOT USED	37338
R087	Not Used	-	NOT USED	37338
R088	Resistor,SMT,MF,100ohms,1%,1/10W,0603	RFFS26	RK73H1JLTD1000F	59124
R089	Resistor,SMT,MF,47.5ohms,1%,1/10W,0603	RFFS22	RK73H1JLTD47R5F	59124
R090	Resistor,SMT,MF,100ohms,1%,1/10W,0603	RFFS26	RK73H1JLTD1000F	59124
R091	Resistor,SMT,MF,1000ohms,1%,1/10W,0603	RFFS38	RK73H1JLTD1001F	59124

Continued from previous page

NAPC160B/01 Control/Interface PWB Assy, NXSeries

REFDES	DESCRIPTION	NAUTEL #	VENDOR #	OEM CODE
R092	Resistor,SMT,MF,1000ohms,1%,1/10W,0603	RFFS38	RK73H1JLTD1001F	59124
R093	Resistor,SMT,MF,4750ohms,1%,1/10W,0603	RFFS46	RK73H1JLTD4751F	59124
R094	Resistor,SMT,MF,10.0Kohms,1%,1/10W,0603	RFFS50	RK73H1JLTD1002F	59124
R095	Resistor,SMT,MF,100ohms,1%,1/10W,0603	RFFS26	RK73H1JLTD1000F	59124
R096	Resistor,SMT,MF,1000ohms,1%,1/10W,0603	RFFS38	RK73H1JLTD1001F	59124
R097	Not Used	-	NOT USED	37338
R098	Resistor,SMT,MF,0.0ohms,Jumper,0603	RFFS01	RK73Z1JLTD	59124
R099	Resistor, SMT, MF, 3320 Ohms,1% 1/4W	RAD31	RK73H2BL3321F	59124
R100	Resistor, SMT, MF, 1500 Ohms,1% 1/4W	RAD27	RK73H2BL1501F	59124
R101	Resistor,SMT,MF,10.0Kohms,1%,1/10W,0603	RFFS50	RK73H1JLTD1002F	59124
R102	Resistor,SMT,MF,10.0Kohms,1%,1/10W,0603	RFFS50	RK73H1JLTD1002F	59124
R103	Resistor,SMT,MF,49.9R,1%,1/10W0603	RAE34	RK73H1JT49R9F	59124
R104	Resistor,SMT,MF,49.9R,1%,1/10W0603	RAE34	RK73H1JT49R9F	59124
R105	Resistor,SMT,MF,10ohms,1%,2W	RAD49Z	CR2512-2W-10R0F-SP	VENKEL
R106	Resistor,SMT,MF,100ohms,1%,1/10W,0603	RFFS26	RK73H1JLTD1000F	59124
R107	Resistor,SMT,MF,10.0Kohms,1%,1/10W,0603	RFFS50	RK73H1JLTD1002F	59124
R108	Resistor,SMT,MF,1000ohms,1%,1/10W,0603	RFFS38	RK73H1JLTD1001F	59124
R109	Not Used	-	NOT USED	37338
R110	Resistor,SMT,MF,100ohms,1%,1/10W,0603	RFFS26	RK73H1JLTD1000F	59124
R111	Resistor,SMT,MF,825ohms,1%,1/10W,0603	RFFS37	RK73H1JLTD8250F	59124
R112	Resistor,SMT,MF,10.0Kohms,1%,1/10W,0603	RFFS50	RK73H1JLTD1002F	59124
R113	Resistor,SMT,MF,10.0Kohms,1%,1/10W,0603	RFFS50	RK73H1JLTD1002F	59124
R114	Resistor,SMT,MF,100ohms,1%,1/10W,0603	RFFS26	RK73H1JLTD1000F	59124
R115	Resistor,SMT,MF,49.9R,1%,1/10W0603	RAE34	RK73H1JT49R9F	59124
R116	Resistor,SMT,MF,49.9R,1%,1/10W0603	RAE34	RK73H1JT49R9F	59124
R117	Resistor,SMT,MF,20ohms,1%,2W	RAD50Z	CR2512-2W-20R0F-SP	VENKEL
R118	Resistor,SMT,MF,20ohms,1%,2W	RAD50Z	CR2512-2W-20R0F-SP	VENKEL
R119	Resistor,SMT,MF,49.9R,1%,1/10W0603	RAE34	RK73H1JT49R9F	59124
R120	Resistor,SMT,MF,49.9R,1%,1/10W0603	RAE34	RK73H1JT49R9F	59124
R121	Resistor,SMT,MF,49.9R,1%,1/10W0603	RAE34	RK73H1JT49R9F	59124
R122	Resistor,SMT,MF,49.9R,1%,1/10W0603	RAE34	RK73H1JT49R9F	59124
R123	Resistor,SMT,MF,10.0Kohms,1%,1/10W,0603	RFFS50	RK73H1JLTD1002F	59124
R124	Resistor,SMT,MF,10.0Kohms,1%,1/10W,0603	RFFS50	RK73H1JLTD1002F	59124
R125	Resistor,SMT,MF,10.0Kohms,1%,1/10W,0603	RFFS50	RK73H1JLTD1002F	59124
R126	Resistor,SMT,MF,100ohms,1%,1/10W,0603	RFFS26	RK73H1JLTD1000F	59124
R127	Resistor,SMT,MF,1000ohms,1%,1/10W,0603	RFFS38	RK73H1JLTD1001F	59124
R128	Not Used	-	NOT USED	37338
R129	Resistor,SMT,MF,1210ohms,1%,1/10W,0603	RFFS39	RK73H1JLTD1211F	59124

Continued from previous page

NAPC160B/01 Control/Interface PWB Assy, NXSeries

REFDES	DESCRIPTION	NAUTEL #	VENDOR #	OEM CODE
R130	Resistor,SMT,49.9 Ohms, 1%	RT20	RK73H2ET49R9F	59124
R131	Resistor,SMT,49.9 Ohms, 1%	RT20	RK73H2ET49R9F	59124
R132	Resistor,SMT,49.9 Ohms, 1%	RT20	RK73H2ET49R9F	59124
R133	Resistor,SMT,49.9 Ohms, 1%	RT20	RK73H2ET49R9F	59124
R134	Resistor,SMT,MF,121ohms,1%,1/10W,0603	RFFS27	RK73H1JLTD1210F	59124
R135	Resistor,SMT,MF,82.5ohms,1%,1/10W,0603	RFFS25	RK73H1JLTD82R5F	59124
R136	Resistor,SMT,MF,49.9R,1%,1/10W0603	RAE34	RK73H1JT49R9F	59124
R137	Resistor,SMT,MF,1000ohms,1%,1/10W,0603	RFFS38	RK73H1JLTD1001F	59124
R138	Resistor,SMT,MF,49.9R,1%,1/10W0603	RAE34	RK73H1JT49R9F	59124
R139	Resistor,SMT,MF,100Kohms,1%,1/10W,0603	RFFS62	RK73H1JLTD1003F	59124
R140	Resistor,SMT,MF,10.0Kohms,1%,1/10W,0603	RFFS50	RK73H1JLTD1002F	59124
R141	Resistor,SMT,49.9 Ohms, 1%	RT20	RK73H2ET49R9F	59124
R142	Resistor,SMT,49.9 Ohms, 1%	RT20	RK73H2ET49R9F	59124
R143	Resistor,SMT,49.9 Ohms, 1%	RT20	RK73H2ET49R9F	59124
R144	Resistor,SMT,49.9 Ohms, 1%	RT20	RK73H2ET49R9F	59124
R145	Resistor,SMT,MF,12.1ohms,1%,1/10W,0603	RFFS15	RK73H1JLTD12R1F	59124
R146	Resistor,SMT,MF,10.0Kohms,1%,1/10W,0603	RFFS50	RK73H1JLTD1002F	59124
R147	Resistor,SMT,MF,121ohms,1%,1/10W,0603	RFFS27	RK73H1JLTD1210F	59124
R148	Not Used	-	NOT USED	37338
R149	Resistor, SMT, MF, 1500 Ohms,1% 1/4W	RAD27	RK73H2BL1501F	59124
R150	Resistor, SMT, MF, 3320 Ohms,1% 1/4W	RAD31	RK73H2BL3321F	59124
R151	Resistor,SMT,MF,10.0Kohms,1%,1/10W,0603	RFFS50	RK73H1JLTD1002F	59124
R152	Resistor,SMT,MF,1210ohms,1%,1/10W,0603	RFFS39	RK73H1JLTD1211F	59124
R153	Resistor,SMT,MF,10.0Kohms,1%,1/10W,0603	RFFS50	RK73H1JLTD1002F	59124
R154	Resistor,SMT,MF,1210ohms,1%,1/10W,0603	RFFS39	RK73H1JLTD1211F	59124
R155	Resistor, SMT, MF, 1500 Ohms,1% 1/4W	RAD27	RK73H2BL1501F	59124
R156	Resistor, SMT, MF, 3320 Ohms,1% 1/4W	RAD31	RK73H2BL3321F	59124
R157	Resistor,SMT,MF,100Kohms,1%,1/10W,0603	RFFS62	RK73H1JLTD1003F	59124
R158	Resistor,SMT,MF,10.0Kohms,1%,1/10W,0603	RFFS50	RK73H1JLTD1002F	59124
R159	Resistor,SMT,MF,10.0Kohms,1%,1/10W,0603	RFFS50	RK73H1JLTD1002F	59124
R160	Resistor,SMT,MF,10.0Kohms,1%,1/10W,0603	RFFS50	RK73H1JLTD1002F	59124
R161	Resistor,SMT,MF,10.0Kohms,1%,1/10W,0603	RFFS50	RK73H1JLTD1002F	59124
R162	Resistor,SMT,MF,10.0Kohms,1%,1/10W,0603	RFFS50	RK73H1JLTD1002F	59124
R163	Resistor,SMT,MF,10.0Kohms,1%,1/10W,0603	RFFS50	RK73H1JLTD1002F	59124
R164	Resistor,SMT,MF,22.1ohms,1%,1/10W,0603	RFFS18	RK73H1JLTD22R1F	59124
R165	Resistor,SMT,MF,22.1ohms,1%,1/10W,0603	RFFS18	RK73H1JLTD22R1F	59124
R166	Resistor,SMT,MF,22.1ohms,1%,1/10W,0603	RFFS18	RK73H1JLTD22R1F	59124
R167	Resistor,SMT,MF,10.0Kohms,1%,1/10W,0603	RFFS50	RK73H1JLTD1002F	59124
R168	Resistor,SMT,MF,10.0Kohms,1%,1/10W,0603	RFFS50	RK73H1JLTD1002F	59124

Continued from previous page

NAPC160B/01 Control/Interface PWB Assy, NXSeries

REFDES	DESCRIPTION	NAUTEL #	VENDOR #	OEM CODE
R169	Resistor,SMT,MF,27.4Kohms,1%,1/10W,0603	RFFS55	RK73H1JLTD2742F	59124
R170	Resistor,SMT,MF,10.0Kohms,1%,1/10W,0603	RFFS50	RK73H1JLTD1002F	59124
R171	Resistor,SMT,MF,10.0Kohms,1%,1/10W,0603	RFFS50	RK73H1JLTD1002F	59124
R172	Resistor,SMT,MF,100ohms,1%,1/10W,0603	RFFS26	RK73H1JLTD1000F	59124
R173	Resistor,SMT,MF,10.0Kohms,1%,1/10W,0603	RFFS50	RK73H1JLTD1002F	59124
R174	Resistor,SMT,MF,121ohms,1%,1/10W,0603	RFFS27	RK73H1JLTD1210F	59124
R175	Resistor,SMT,MF,1210ohms,1%,1/10W,0603	RFFS39	RK73H1JLTD1211F	59124
R176	Resistor, SMT, MF, 100 Ohms,1% 1/4W	RAD13	RK73H2BL1000F	59124
R177	Resistor,SMT,MF,1000ohms,1%,1/10W,0603	RFFS38	RK73H1JLTD1001F	59124
R178	Resistor,SMT,MF,1000ohms,1%,1/10W,0603	RFFS38	RK73H1JLTD1001F	59124
R179	Resistor, SMT, MF, 100 Ohms,1% 1/4W	RAD13	RK73H2BL1000F	59124
R180	Resistor,SMT,150 Ohms,,1%,2W	RAD55Z	CR2512-2W-1500F-SP	3EQW4
R181	Resistor,SMT,MF,49.9R,1%,1/10W0603	RAE34	RK73H1JT49R9F	59124
R182	Resistor,SMT,MF,681ohms,1%,1/10W,0603	RFFS36	RK73H1JLTD6810F	59124
R183	Resistor,SMT,MF,49.9R,1%,1/10W0603	RAE34	RK73H1JT49R9F	59124
R184	Resistor,SMT,MF,49.9R,1%,1/10W0603	RAE34	RK73H1JT49R9F	59124
R185	Resistor,SMT,MF,10.0Kohms,1%,1/10W,0603	RFFS50	RK73H1JLTD1002F	59124
R186	Resistor,SMT,MF,10.0Kohms,1%,1/10W,0603	RFFS50	RK73H1JLTD1002F	59124
R187	Resistor,SMT,MF,49.9R,1%,1/10W0603	RAE34	RK73H1JT49R9F	59124
R188	Resistor,SMT,MF,10.0Kohms,1%,1/10W,0603	RFFS50	RK73H1JLTD1002F	59124
R189	Resistor,SMT,MF,681ohms,1%,1/10W,0603	RFFS36	RK73H1JLTD6810F	59124
R190	Resistor,SMT,MF,10.0Kohms,1%,1/10W,0603	RFFS50	RK73H1JLTD1002F	59124
R191	Resistor,SMT,MF,2210ohms,1%,1/10W,0603	RFFS42	RK73H1JLTD2211F	59124
R192	Resistor,SMT,MF,10.0Kohms,1%,1/10W,0603	RFFS50	RK73H1JLTD1002F	59124
R193	Resistor,SMT,MF,10.0Kohms,1%,1/10W,0603	RFFS50	RK73H1JLTD1002F	59124
R194	Resistor,SMT,MF,2210ohms,1%,1/10W,0603	RFFS42	RK73H1JLTD2211F	59124
R195	Resistor,SMT,MF,10.0Kohms,1%,1/10W,0603	RFFS50	RK73H1JLTD1002F	59124
R196	Resistor,SMT,MF,10.0Kohms,1%,1/10W,0603	RFFS50	RK73H1JLTD1002F	59124
R197	Resistor,SMT,MF,681ohms,1%,1/10W,0603	RFFS36	RK73H1JLTD6810F	59124
R198	Resistor,SMT,MF,562ohms,1%,1/10W,0603	RFFS35	RK73H1JLTD5620F	59124
R199	Resistor,SMT,MF,681ohms,1%,1/10W,0603	RFFS36	RK73H1JLTD6810F	59124
R200	Resistor,SMT,MF,562ohms,1%,1/10W,0603	RFFS35	RK73H1JLTD5620F	59124
R201	Resistor,SMT,MF,10.0Kohms,1%,1/10W,0603	RFFS50	RK73H1JLTD1002F	59124
R202	Resistor,SMT,MF,475ohms,1%,1/10W,0603	RFFS34	RK73H1JLTD4750F	59124
R203	Resistor,SMT,MF,4750ohms,1%,1/10W,0603	RFFS46	RK73H1JLTD4751F	59124
R204	Resistor,SMT,MF,12.1Kohms,1%,1/10W,0603	RFFS51	RK73H1JLTD1212F	59124
R205	Resistor,SMT,MF,10.0Kohms,1%,1/10W,0603	RFFS50	RK73H1JLTD1002F	59124
R206	Resistor,SMT,MF,1000ohms,1%,1/10W,0603	RFFS38	RK73H1JLTD1001F	59124
R207	Resistor,SMT,MF,10.0Kohms,1%,1/10W,0603	RFFS50	RK73H1JLTD1002F	59124

Continued from previous page

NAPC160B/01 Control/Interface PWB Assy, NXSeries

REFDES	DESCRIPTION	NAUTEL #	VENDOR #	OEM CODE
R208	Resistor, SMT, MF, 1000 Ohms,1% 1/4W	RAD25	RK73H2BL1001F	59124
R209	Resistor,SMT,MF,475ohms,1%,1/10W,0603	RFFS34	RK73H1JLTD4750F	59124
R210	Resistor,SMT,MF,10.0Kohms,1%,1/10W,0603	RFFS50	RK73H1JLTD1002F	59124
R211	Resistor,SMT,MF,274ohms,1%,1/10W,0603	RFFS31	RK73H1JLTD2740F	59124
R212	Not Used	-	NOT USED	37338
R213	Resistor, SMT, MF, 1000 Ohms,1% 1/4W	RAD25	RK73H2BL1001F	59124
R214	Resistor,SMT,MF,475ohms,1%,1/10W,0603	RFFS34	RK73H1JLTD4750F	59124
R215	Resistor,SMT,MF,1000ohms,1%,1/10W,0603	RFFS38	RK73H1JLTD1001F	59124
R216	Resistor,SMT,MF,10.0Kohms,1%,1/10W,0603	RFFS50	RK73H1JLTD1002F	59124
R217	Resistor,SMT,MF,475ohms,1%,1/10W,0603	RFFS34	RK73H1JLTD4750F	59124
R218	Resistor,SMT,MF,1000ohms,1%,1/10W,0603	RFFS38	RK73H1JLTD1001F	59124
R219	Resistor,SMT,MF,10.0Kohms,1%,1/10W,0603	RFFS50	RK73H1JLTD1002F	59124
R220	Resistor,SMT,MF,1000ohms,1%,1/10W,0603	RFFS38	RK73H1JLTD1001F	59124
R221	Resistor,SMT,MF,10.0Kohms,1%,1/10W,0603	RFFS50	RK73H1JLTD1002F	59124
R222	Resistor,SMT,MF,475ohms,1%,1/10W,0603	RFFS34	RK73H1JLTD4750F	59124
R223	Resistor,SMT,MF,10.0Kohms,1%,1/10W,0603	RFFS50	RK73H1JLTD1002F	59124
R224	Resistor,SMT,MF,3320ohms,1%,1/10W,0603	RFFS44	RK73H1JLTD3321F	59124
R225	Resistor,SMT,MF,10.0Kohms,1%,1/10W,0603	RFFS50	RK73H1JLTD1002F	59124
R226	Resistor,SMT,MF,3320ohms,1%,1/10W,0603	RFFS44	RK73H1JLTD3321F	59124
R227	Resistor,SMT,MF,10.0Kohms,1%,1/10W,0603	RFFS50	RK73H1JLTD1002F	59124
R228	Not Used	-	NOT USED	37338
R229	Resistor,SMT,MF,10.0Kohms,1%,1/10W,0603	RFFS50	RK73H1JLTD1002F	59124
R230	Resistor,SMT,MF,10.0Kohms,1%,1/10W,0603	RFFS50	RK73H1JLTD1002F	59124
R231	Resistor,SMT,MF,10.0Kohms,1%,1/10W,0603	RFFS50	RK73H1JLTD1002F	59124
R232	Resistor,SMT,MF,10.0Kohms,1%,1/10W,0603	RFFS50	RK73H1JLTD1002F	59124
R233	Resistor,SMT,MF,475ohms,1%,1/10W,0603	RFFS34	RK73H1JLTD4750F	59124
R234	Resistor,SMT,MF,1000ohms,1%,1/10W,0603	RFFS38	RK73H1JLTD1001F	59124
R235	Resistor,SMT,MF,10.0Kohms,1%,1/10W,0603	RFFS50	RK73H1JLTD1002F	59124
R236	Resistor,SMT,MF,681ohms,1%,1/10W,0603	RFFS36	RK73H1JLTD6810F	59124
R237	Resistor, SMT, MF, 221 Ohms,1% 1/4W	RAD17	RK73H2BL2210F	59124
R238	Resistor,SMT,MF,681ohms,1%,1/10W,0603	RFFS36	RK73H1JLTD6810F	59124
R239	Resistor,SMT,MF,10.0Kohms,1%,1/10W,0603	RFFS50	RK73H1JLTD1002F	59124
R240	Resistor, SMT, MF, 221 Ohms,1% 1/4W	RAD17	RK73H2BL2210F	59124
R241	Resistor,SMT,MF,475ohms,1%,1/10W,0603	RFFS34	RK73H1JLTD4750F	59124
R242	Resistor,SMT,MF,10.0ohms,1%,1/10W,0603	RFFS14	RK73H1JLTD10R0F	59124
R243	Resistor,SMT,MF,10.0ohms,1%,1/10W,0603	RFFS14	RK73H1JLTD10R0F	59124
R244	Resistor,SMT,MF,10.0Kohms,1%,1/10W,0603	RFFS50	RK73H1JLTD1002F	59124
R245	Resistor,SMT,MF,10.0Kohms,1%,1/10W,0603	RFFS50	RK73H1JLTD1002F	59124
R246	Resistor,SMT,MF,10.0Kohms,1%,1/10W,0603	RFFS50	RK73H1JLTD1002F	59124

Continued from previous page

NAPC160B/01 Control/Interface PWB Assy, NXSeries

REFDES	DESCRIPTION	NAUTEL #	VENDOR #	OEM CODE
R247	Resistor,SMT,MF,10.0Kohms,1%,1/10W,0603	RFFS50	RK73H1JLTD1002F	59124
R248	Resistor,SMT,MF,10.0ohms,1%,1/10W,0603	RFFS14	RK73H1JLTD10R0F	59124
R249	Resistor,SMT,MF,10.0ohms,1%,1/10W,0603	RFFS14	RK73H1JLTD10R0F	59124
R250	Resistor,SMT,MF,1000ohms,1%,1/10W,0603	RFFS38	RK73H1JLTD1001F	59124
R251	Resistor,SMT,MF,10.0Kohms,1%,1/10W,0603	RFFS50	RK73H1JLTD1002F	59124
R252	Resistor,SMT,MF,10.0Kohms,1%,1/10W,0603	RFFS50	RK73H1JLTD1002F	59124
R253	Resistor,SMT,MF,10.0Kohms,1%,1/10W,0603	RFFS50	RK73H1JLTD1002F	59124
R254	Resistor,SMT,MF,100ohms,1%,1/10W,0603	RFFS26	RK73H1JLTD1000F	59124
R255	Resistor,SMT,MF,100ohms,1%,1/10W,0603	RFFS26	RK73H1JLTD1000F	59124
R256	Resistor,SMT,MF,100ohms,1%,1/10W,0603	RFFS26	RK73H1JLTD1000F	59124
R257	Resistor,SMT,MF,10.0Kohms,1%,1/10W,0603	RFFS50	RK73H1JLTD1002F	59124
R258	Resistor,SMT,MF,10.0Kohms,1%,1/10W,0603	RFFS50	RK73H1JLTD1002F	59124
R259	Resistor,SMT,MF,10.0ohms,1%,1/10W,0603	RFFS14	RK73H1JLTD10R0F	59124
R260	Resistor,SMT,MF,10.0ohms,1%,1/10W,0603	RFFS14	RK73H1JLTD10R0F	59124
R261	Resistor,SMT,MF,10.0Kohms,1%,1/10W,0603	RFFS50	RK73H1JLTD1002F	59124
R262	Resistor,SMT,MF,10.0Kohms,1%,1/10W,0603	RFFS50	RK73H1JLTD1002F	59124
R263	Resistor,SMT,MF,10.0ohms,1%,1/10W,0603	RFFS14	RK73H1JLTD10R0F	59124
R264	Resistor,SMT,MF,10.0ohms,1%,1/10W,0603	RFFS14	RK73H1JLTD10R0F	59124
R265	Resistor,SMT,MF,10.0Kohms,1%,1/10W,0603	RFFS50	RK73H1JLTD1002F	59124
R266	Resistor,SMT,MF,10.0Kohms,1%,1/10W,0603	RFFS50	RK73H1JLTD1002F	59124
R267	Resistor,SMT,MF,10.0Kohms,1%,1/10W,0603	RFFS50	RK73H1JLTD1002F	59124
R268	Resistor,SMT,MF,10.0Kohms,1%,1/10W,0603	RFFS50	RK73H1JLTD1002F	59124
R269	Resistor,SMT,MF,10.0Kohms,1%,1/10W,0603	RFFS50	RK73H1JLTD1002F	59124
R270	Resistor,SMT,MF,10.0Kohms,1%,1/10W,0603	RFFS50	RK73H1JLTD1002F	59124
R271	Resistor,SMT,MF,4750ohms,1%,1/10W,0603	RFFS46	RK73H1JLTD4751F	59124
R272	Resistor,SMT,MF,4750ohms,1%,1/10W,0603	RFFS46	RK73H1JLTD4751F	59124
R273	Resistor,SMT,MF,4750ohms,1%,1/10W,0603	RFFS46	RK73H1JLTD4751F	59124
R274	Resistor,SMT,MF,4750ohms,1%,1/10W,0603	RFFS46	RK73H1JLTD4751F	59124
R275	Resistor,SMT,MF,4750ohms,1%,1/10W,0603	RFFS46	RK73H1JLTD4751F	59124
R276	Resistor,SMT,MF,4750ohms,1%,1/10W,0603	RFFS46	RK73H1JLTD4751F	59124
R277	Resistor,SMT,MF,4750ohms,1%,1/10W,0603	RFFS46	RK73H1JLTD4751F	59124
R278	Resistor,SMT,MF,4750ohms,1%,1/10W,0603	RFFS46	RK73H1JLTD4751F	59124
R279	Resistor,SMT,MF,4750ohms,1%,1/10W,0603	RFFS46	RK73H1JLTD4751F	59124
R280	Resistor,SMT,MF,4750ohms,1%,1/10W,0603	RFFS46	RK73H1JLTD4751F	59124
R281	Resistor,SMT,MF,4750ohms,1%,1/10W,0603	RFFS46	RK73H1JLTD4751F	59124
R282	Resistor,SMT,MF,4750ohms,1%,1/10W,0603	RFFS46	RK73H1JLTD4751F	59124
R283	Resistor,SMT,MF,4750ohms,1%,1/10W,0603	RFFS46	RK73H1JLTD4751F	59124
R284	Resistor,SMT,MF,4750ohms,1%,1/10W,0603	RFFS46	RK73H1JLTD4751F	59124
R285	Resistor,SMT,MF,4750ohms,1%,1/10W,0603	RFFS46	RK73H1JLTD4751F	59124

Continued from previous page

REFDES	DESCRIPTION	NAUTEL #	VENDOR #	OEM CODE
R286	Resistor,SMT,MF,4750ohms,1%,1/10W,0603	RFFS46	RK73H1JLTD4751F	59124
R287	Resistor,SMT,MF,10.0Kohms,1%,1/10W,0603	RFFS50	RK73H1JLTD1002F	59124
R288	Resistor,SMT,MF,10.0Kohms,1%,1/10W,0603	RFFS50	RK73H1JLTD1002F	59124
R289	Resistor,SMT,MF,10.0Kohms,1%,1/10W,0603	RFFS50	RK73H1JLTD1002F	59124
R290	Resistor,SMT,MF,10.0Kohms,1%,1/10W,0603	RFFS50	RK73H1JLTD1002F	59124
R291	Resistor,SMT,MF,10.0Kohms,1%,1/10W,0603	RFFS50	RK73H1JLTD1002F	59124
R292	Resistor,SMT,MF,10.0Kohms,1%,1/10W,0603	RFFS50	RK73H1JLTD1002F	59124
R293	Resistor,SMT,MF,10.0Kohms,1%,1/10W,0603	RFFS50	RK73H1JLTD1002F	59124
R294	Resistor,SMT,MF,10.0Kohms,1%,1/10W,0603	RFFS50	RK73H1JLTD1002F	59124
R295	Resistor,SMT,MF,10.0Kohms,1%,1/10W,0603	RFFS50	RK73H1JLTD1002F	59124
R296	Resistor,SMT,MF,10.0Kohms,1%,1/10W,0603	RFFS50	RK73H1JLTD1002F	59124
R297	Resistor,SMT,MF,10.0Kohms,1%,1/10W,0603	RFFS50	RK73H1JLTD1002F	59124
R298	Resistor,SMT,MF,10.0Kohms,1%,1/10W,0603	RFFS50	RK73H1JLTD1002F	59124
R299	Resistor,SMT,MF,10.0Kohms,1%,1/10W,0603	RFFS50	RK73H1JLTD1002F	59124
R300	Resistor,SMT,MF,10.0Kohms,1%,1/10W,0603	RFFS50	RK73H1JLTD1002F	59124
R301	Resistor,SMT,MF,10.0Kohms,1%,1/10W,0603	RFFS50	RK73H1JLTD1002F	59124
R302	Resistor,SMT,MF,10.0Kohms,1%,1/10W,0603	RFFS50	RK73H1JLTD1002F	59124
R303	Resistor,SMT,MF,10.0Kohms,1%,1/10W,0603	RFFS50	RK73H1JLTD1002F	59124
R304	Resistor,SMT,MF,10.0Kohms,1%,1/10W,0603	RFFS50	RK73H1JLTD1002F	59124
R305	Resistor,SMT,MF,10.0Kohms,1%,1/10W,0603	RFFS50	RK73H1JLTD1002F	59124
R306	Resistor,SMT,MF,10.0Kohms,1%,1/10W,0603	RFFS50	RK73H1JLTD1002F	59124
R307	Resistor,SMT,MF,10.0Kohms,1%,1/10W,0603	RFFS50	RK73H1JLTD1002F	59124
R308	Resistor,SMT,MF,10.0Kohms,1%,1/10W,0603	RFFS50	RK73H1JLTD1002F	59124
R309	Resistor,SMT,MF,10.0ohms,1%,1/10W,0603	RFFS14	RK73H1JLTD10R0F	59124
R310	Resistor,SMT,MF,10.0ohms,1%,1/10W,0603	RFFS14	RK73H1JLTD10R0F	59124
R311	Resistor,SMT,MF,10.0ohms,1%,1/10W,0603	RFFS14	RK73H1JLTD10R0F	59124
R312	Resistor,SMT,MF,10.0ohms,1%,1/10W,0603	RFFS14	RK73H1JLTD10R0F	59124
R313	Resistor, SMT, MF, 4750 Ohms,1%, 1/4W	RAD33	RK73H2BL4751F	59124
R314	Resistor, SMT, MF, 4750 Ohms,1%, 1/4W	RAD33	RK73H2BL4751F	59124
R315	Resistor, SMT, MF, 4750 Ohms,1%, 1/4W	RAD33	RK73H2BL4751F	59124
R316	Resistor, SMT, MF, 4750 Ohms,1%, 1/4W	RAD33	RK73H2BL4751F	59124
R317	Resistor, SMT, MF, 4750 Ohms,1%, 1/4W	RAD33	RK73H2BL4751F	59124
R318	Resistor, SMT, MF, 4750 Ohms,1%, 1/4W	RAD33	RK73H2BL4751F	59124
R319	Resistor, SMT, MF, 4750 Ohms,1%, 1/4W	RAD33	RK73H2BL4751F	59124
R320	Resistor, SMT, MF, 4750 Ohms,1%, 1/4W	RAD33	RK73H2BL4751F	59124
R321	Resistor, SMT, MF, 4750 Ohms,1%, 1/4W	RAD33	RK73H2BL4751F	59124
R322	Resistor, SMT, MF, 4750 Ohms,1%, 1/4W	RAD33	RK73H2BL4751F	59124
R323	Resistor, SMT, MF, 4750 Ohms,1%, 1/4W	RAD33	RK73H2BL4751F	59124
R324	Resistor, SMT, MF, 4750 Ohms,1%, 1/4W	RAD33	RK73H2BL4751F	59124

Continued from previous page

NAPC160B/01 Control/Interface PWB Assy, NXSeries

REFDES	DESCRIPTION	NAUTEL #	VENDOR #	OEM CODE
R325	Resistor, SMT, MF, 4750 Ohms,1%, 1/4W	RAD33	RK73H2BL4751F	59124
R326	Resistor, SMT, MF, 4750 Ohms,1%, 1/4W	RAD33	RK73H2BL4751F	59124
R327	Resistor, SMT, MF, 4750 Ohms,1%, 1/4W	RAD33	RK73H2BL4751F	59124
R328	Resistor, SMT, MF, 4750 Ohms,1%, 1/4W	RAD33	RK73H2BL4751F	59124
R329	Resistor,SMT,MF,12.1ohms,1%,1/10W,0603	RFFS15	RK73H1JLTD12R1F	59124
R330	Resistor,SMT,MF,12.1ohms,1%,1/10W,0603	RFFS15	RK73H1JLTD12R1F	59124
R331	Resistor,SMT,MF,12.1ohms,1%,1/10W,0603	RFFS15	RK73H1JLTD12R1F	59124
R332	Resistor,SMT,MF,12.1ohms,1%,1/10W,0603	RFFS15	RK73H1JLTD12R1F	59124
R333	Resistor,SMT,MF,12.1ohms,1%,1/10W,0603	RFFS15	RK73H1JLTD12R1F	59124
R334	Resistor,SMT,MF,12.1ohms,1%,1/10W,0603	RFFS15	RK73H1JLTD12R1F	59124
R335	Resistor,SMT,MF,12.1ohms,1%,1/10W,0603	RFFS15	RK73H1JLTD12R1F	59124
R336	Resistor,SMT,MF,12.1ohms,1%,1/10W,0603	RFFS15	RK73H1JLTD12R1F	59124
R337	Resistor,SMT,MF,12.1ohms,1%,1/10W,0603	RFFS15	RK73H1JLTD12R1F	59124
R338	Resistor,SMT,MF,12.1ohms,1%,1/10W,0603	RFFS15	RK73H1JLTD12R1F	59124
R339	Resistor,SMT,MF,12.1ohms,1%,1/10W,0603	RFFS15	RK73H1JLTD12R1F	59124
R340	Resistor,SMT,MF,12.1ohms,1%,1/10W,0603	RFFS15	RK73H1JLTD12R1F	59124
R341	Resistor,SMT,MF,12.1ohms,1%,1/10W,0603	RFFS15	RK73H1JLTD12R1F	59124
R342	Resistor,SMT,MF,12.1ohms,1%,1/10W,0603	RFFS15	RK73H1JLTD12R1F	59124
R343	Resistor,SMT,MF,12.1ohms,1%,1/10W,0603	RFFS15	RK73H1JLTD12R1F	59124
R344	Resistor,SMT,MF,12.1ohms,1%,1/10W,0603	RFFS15	RK73H1JLTD12R1F	59124
R345	Resistor,SMT,MF,10.0ohms,1%,1/10W,0603	RFFS14	RK73H1JLTD10R0F	59124
R346	Resistor,SMT,MF,10.0ohms,1%,1/10W,0603	RFFS14	RK73H1JLTD10R0F	59124
R347	Resistor,SMT,MF,10.0ohms,1%,1/10W,0603	RFFS14	RK73H1JLTD10R0F	59124
R348	Resistor,SMT,MF,10.0ohms,1%,1/10W,0603	RFFS14	RK73H1JLTD10R0F	59124
R349	Resistor,2512 SMT,100 ohms,1%,1W,	RAD52	ERJ-1TYF101U	PANAS
R350	Resistor,2512 SMT,100 ohms,1%,1W,	RAD52	ERJ-1TYF101U	PANAS
R351	Resistor,SMT,MF,49.9R,1%,1/10W0603	RAE34	RK73H1JT49R9F	59124
R352	Resistor,SMT,MF,49.9R,1%,1/10W0603	RAE34	RK73H1JT49R9F	59124
R353	Not Used	-	NOT USED	37338
R354	Not Used	-	NOT USED	37338
R355	Not Used	-	NOT USED	37338
R356	Not Used	-	NOT USED	37338
R357	Resistor, SMT, MF, 1000 Ohms,1% 1/4W	RAD25	RK73H2BL1001F	59124
R358	Not Used	-	NOT USED	37338
R359	Resistor, SMT, MF, 1000 Ohms,1% 1/4W	RAD25	RK73H2BL1001F	59124
R360	Not Used	-	NOT USED	37338
R361	Resistor,SMT,MF,100ohms,1%,1/10W,0603	RFFS26	RK73H1JLTD1000F	59124
RT01	Thermistor, PTC, .15-.25 Ohms, 1.1A Hold	RT17	RXE110	06090
RT02	Thermistor, PTC, .15-.25 Ohms, 1.1A Hold	RT17	RXE110	06090

Continued from previous page

NAPC160B/01 Control/Interface PWB Assy, NXSeries

REFDES	DESCRIPTION	NAUTEL #	VENDOR #	OEM CODE
RT03	Thermistor, PTC, .50-.77 Ohms, 0.5A Hold	RT16	RXE050	06090
RT04	Thermistor, PTC, .15-.25 Ohms, 1.1A Hold	RT17	RXE110	06090
S01	Switch, SMT, SPST, Momentary,w/ESD gnd	SD77	B3SN-3112P(RoHS)	34361
S02	Switch, SMT, SPST, Momentary,w/ESD gnd	SD77	B3SN-3112P(RoHS)	34361
S03	Switch, SMT, SPST, Momentary,w/ESD gnd	SD77	B3SN-3112P(RoHS)	34361
S04	Switch, SMT, SPST, Momentary,w/ESD gnd	SD77	B3SN-3112P(RoHS)	34361
S05	Switch, Slide, DPDT, ON, ON	SD07	MHS-222	95146
S06	Switch, SMT, SPST, Momentary,w/ESD gnd	SD77	B3SN-3112P(RoHS)	34361
S07	Switch, SMT, SPST, Momentary,w/ESD gnd	SD77	B3SN-3112P(RoHS)	34361
T01	Transformer,SMT,50 ohms,0.03to 125MHz	TZ88	ADT1-6T+(ROHS)	MINI-CIRC
T02	Transformer,SMT,50 ohms,0.03to 125MHz	TZ88	ADT1-6T+(ROHS)	MINI-CIRC
T03	Transformer, Gate Drive, HighFreq	TZ74	P0584	01961
T04	Not Used	-	NOT USED	37338
T05	Transmformer RF, 4:1, 0.03 to75 MHz, Gull Wing	TE22	T16-6T-KK81+(RoHS)	15542
T06	Not Used	-	NOT USED	37338
T07	Transmformer RF, 4:1, 0.03 to75 MHz, Gull Wing	TE22	T16-6T-KK81+(RoHS)	15542
T08	Transformer, Gate Drive, HighFreq	TZ74	P0584	01961
TB01	Terminal Block,5mm,3-pos,PWBMt,Green	JR50	282836-3	5Y407
TP01	Terminal, SMT, Test Point, PWB	HAJ66	TP-107-02-1-T(RoHS) COMPONENTS CORP	
TP08	Terminal, SMT, Test Point, PWB	HAJ66	TP-107-02-1-T(RoHS) COMPONENTS CORP	
TP12	Terminal, SMT, Test Point, PWB	HAJ66	TP-107-02-1-T(RoHS) COMPONENTS CORP	
TP13	Terminal, SMT, Test Point, PWB	HAJ66	TP-107-02-1-T(RoHS) COMPONENTS CORP	
TP14	Terminal, SMT, Test Point, PWB	HAJ66	TP-107-02-1-T(RoHS) COMPONENTS CORP	
TP15	Terminal, SMT, Test Point, PWB	HAJ66	TP-107-02-1-T(RoHS) COMPONENTS CORP	
TP16	Terminal, SMT, Test Point, PWB	HAJ66	TP-107-02-1-T(RoHS) COMPONENTS CORP	
TP17	Terminal, SMT, Test Point, PWB	HAJ66	TP-107-02-1-T(RoHS) COMPONENTS CORP	
TP19	Terminal, SMT, Test Point, PWB	HAJ66	TP-107-02-1-T(RoHS) COMPONENTS CORP	

Continued from previous page

NAPC160B/01 Control/Interface PWB Assy, NXSeries

REFDES	DESCRIPTION	NAUTEL #	VENDOR #	OEM CODE
TP20	Terminal, SMT, Test Point, PWB	HAJ66	TP-107-02-1-T(RoHS) COMPONENTS CORP	
TP32	Terminal, SMT, Test Point, PWB	HAJ66	TP-107-02-1-T(RoHS) COMPONENTS CORP	
TP36	Terminal, SMT, Test Point, PWB	HAJ66	TP-107-02-1-T(RoHS) COMPONENTS CORP	
TP38	Terminal, SMT, Test Point, PWB	HAJ66	TP-107-02-1-T(RoHS) COMPONENTS CORP	
TP39	Terminal, SMT, Test Point, PWB	HAJ66	TP-107-02-1-T(RoHS) COMPONENTS CORP	
TP43	Terminal, SMT, Test Point, PWB	HAJ66	TP-107-02-1-T(RoHS) COMPONENTS CORP	
TP44	Terminal, SMT, Test Point, PWB	HAJ66	TP-107-02-1-T(RoHS) COMPONENTS CORP	
U01	IC,SMT,RS-232 Transceiver,3.3V,SO-16	UDTS05	ADM3202ARN(STATIC)	45496
U02	IC,SMT,Quad RS-422 DIFF LineDriver	UD66	DS26C31T/DS26C31M (STATIC)	NATIONAL
U03	IC,SMT,Quad RS-422 DIFF LineDriver	UD66	DS26C31T/DS26C31M (STATIC)	NATIONAL
U04	IC,SMT,Quad RS-422 DIFF LineDriver	UD66	DS26C31T/DS26C31M (STATIC)	NATIONAL
U05	IC,SMT,Quad RS-422 DIFF LineDriver	UD66	DS26C31T/DS26C31M (STATIC)	NATIONAL
U06	IC,SMT,Optocoupler,High CMR &Speed Gull Wing	UD68	6N137-300E(STATIC)(ROHS) AVAGO TECHNOLOGIES	AVAGO
U07	IC,SMT,Optocoupler,High CMR &Speed Gull Wing	UD68	6N137-300E(STATIC)(ROHS) AVAGO TECHNOLOGIES	AVAGO
U08	IC,DC-DC Converter,3kV ISO,5V-5V,1W	UT73	NMV0505SA(STATIC)	C&D
U09	IC,SMT,Quad RS-422 DIFF LineDriver	UD66	DS26C31T/DS26C31M (STATIC)	NATIONAL
U10	IC,SMT,Quad RS-422 DIFF LineDriver	UD66	DS26C31T/DS26C31M (STATIC)	NATIONAL
U11	IC,SMT,Quad RS-422 DIFF LineDriver	UD66	DS26C31T/DS26C31M (STATIC)	NATIONAL
U12	IC,SMT,Quad RS-422 DIFF LineDriver	UD66	DS26C31T/DS26C31M (STATIC)	NATIONAL
U13	IC, SMT, High Speed Comparator, SOIC-8	UT70	TL3016ID(STATIC)	01295
U14	IC,SMT,Quad RS-422 DIFF LineDriver	UD66	DS26C31T/DS26C31M (STATIC)	NATIONAL
U15	IC,SMT,Quad RS-422 DIFF LineDriver	UD66	DS26C31T/DS26C31M (STATIC)	NATIONAL

Continued from previous page

NAPC160B/01 Control/Interface PWB Assy, NXSeries

REFDES	DESCRIPTION	NAUTEL #	VENDOR #	OEM CODE
U16	IC,SMT,Quad RS-422 DIFF LineDriver	UD66	DS26C31T/DS26C31M (STATIC)	NATIONAL
U17	IC,SMT,Quad RS-422 DIFF LineDriver	UD66	DS26C31T/DS26C31M (STATIC)	NATIONAL
U18	IC,SMT,Quad 2-input AND gate,SO-14	UD70	MC74ACT08D(STATIC)	ON SEMI
U19	IC,SMT,Quad 2 to 1 DATA Sel/Mux 3 States Outputs,5V	UD67	SN74HC257PW(STATIC)(ROHS)	TEXAS
U20	IC, SMT, 2-Input Logic, UHSUniv Config SC70-6	UD82	NC7SZ57P6X(Static)(RoHS)	07933
U21	IC,SMT,Quad 2 TO 1 DATA Sel/Mux 3 States Output,3.3V	UW90	74LVC257APW(STATIC)(ROHS) NXP SEMICONDUCTOR	NXP SEMI
U22	IC,SMT,Quad 2 TO 1 DATA Sel/Mux 3 States Output,3.3V	UW90	74LVC257APW(STATIC)(ROHS) NXP SEMICONDUCTOR	NXP SEMI
U23	IC,SMT,Quad 2 TO 1 DATA Sel/Mux 3 States Output,3.3V	UW90	74LVC257APW(STATIC)(ROHS) NXP SEMICONDUCTOR	NXP SEMI
U24	IC,SMT,Quad 2 TO 1 DATA Sel/Mux 3 States Output,3.3V	UW90	74LVC257APW(STATIC)(ROHS) NXP SEMICONDUCTOR	NXP SEMI
U25	IC,SMT,RS-232 Transceiver,3.3V,SO-16	UDTS05	ADM3202ARN(STATIC)	45496
U26	IC,SMT,CMOS,8-Bit Shft Reg,Par O/P, SOIC-16	UDLS05	MC74HC595AD(STATIC)	04713
U27	IC,SMT,CMOS,8-Bit Shft Reg,Par O/P, SOIC-16	UDLS05	MC74HC595AD(STATIC)	04713
U28	IC,SMT,Comparator,Quad,SOIC-14	ULCS01	MC3302D(STATIC)	04713
U29	IC,SMT,Comparator,Quad,SOIC-14	ULCS01	MC3302D(STATIC)	04713
U30	IC,SMT,Comparator,Quad,SOIC-14	ULCS01	MC3302D(STATIC)	04713
U31	IC, SMT, High Speed Comparator, SOIC-8	UT70	TL3016ID(STATIC)	01295
U32	IC,SMT,Quad RS-422 DIFF LineDriver	UD66	DS26C31T/DS26C31M (STATIC)	NATIONAL
U33	IC,SMT,Digital Pot,Quad,20K,TSSOP-24	UX87	AD5263BRU20(STATIC)	45496
U34	IC, Voltage Regulator, 1.5A,ADJ, Low Drop	UT110	LP38500TS-ADJ(STATIC) National	27014
U35	IC,SMT,Quad 2 TO 1 DATA Sel/Mux 3 States Output,3.3V	UW90	74LVC257APW(STATIC)(ROHS) NXP SEMICONDUCTOR	NXP SEMI
U36	IC,SMT,OP-AMP,Dual,CurrentFeedback,SO-8	UD71	OPA2691ID(STATIC)	TEXAS
U37	IC, SMT, High Speed Comparator, SOIC-8	UT70	TL3016ID(STATIC)	01295
U38	IC,SMT,Quad 2 TO 1 DATA Sel/Mux 3 States Output,3.3V	UW90	74LVC257APW(STATIC)(ROHS) NXP SEMICONDUCTOR	NXP SEMI
U39	IC,SMT,Quad 2 TO 1 DATA Sel/Mux 3 States Output,3.3V	UW90	74LVC257APW(STATIC)(ROHS) NXP SEMICONDUCTOR	NXP SEMI
U40	IC,SMT,RS-485 Transceiver,Sgl,SOIC-8	UDTS03	DS36C278TM(STATIC)	27014

Continued from previous page

NAPC160B/01 Control/Interface PWB Assy, NXSeries

REFDES	DESCRIPTION	NAUTEL #	VENDOR #	OEM CODE
U41	IC,SMT,OP-AMP,Dual,CurrentFeedback,SO-8	UD71	OPA2691ID(STATIC)	TEXAS
U42	IC,SMT,Dual Optocoupler,SOIC-8	UDOS01	MOCD223-M(STATIC)	7D893
U43	IC,SMT,CMOS,Quad 2-Input NANDGate,SO-14	UDLS10	MM74HC00M(STATIC)	07263
U44	IC, SMT, Voltage Regulator,-5V, DPAK	UP70	MC79M05BDT(STATIC)	ON SEMI
U45	IC,SMT,Quad RS-422 Receiver,16-SOIC	UT91	DS26C32ATM(STATIC)	NATIONAL
U46	IC,SMT,Quad 2 TO 1 DATA Sel/Mux 3 States Output,3.3V	UW90	74LVC257APW(STATIC)(ROHS) NXP SEMICONDUCTOR	NXP SEMI
U47	IC,SMT,Trans Array, 7 Darl.,SOIC-16	UDAS01	MC1413BD(STATIC)	04713
U48	IC,SMT,Quad RS-422 Receiver,16-SOIC	UT91	DS26C32ATM(STATIC)	NATIONAL
U49	IC, SMT, 2-Input Logic, UHSUniv Config SC70-6	UD82	NC7SZ57P6X(Static)(RoHS)	07933
U50	IC,SMT,Dual Optocoupler,SOIC-8	UDOS01	MOCD223-M(STATIC)	7D893
U51	IC,SMT,Low Voltage Temp SensorSO-8	UC62	TMP36FS(STATIC)	ANALOG D
U52	IC,SMT,Opamp,Quad,Rail-To-Rail,SOIC-14	ULAS02	TLV2374ID(STATIC)	01295
U53	IC,SMT,Micro,256K Flash,5V,TQFP-100	UX100	ATmega2560-16AUR(STATIC)(ROHS) ATMEL	1FN41
U54	IC,SMT,Ultrafast Single Supply Comparator,TSSOP	UT83	AD8561ARUZ(STATIC)	45496
U55	IC,SMT,Op Amp,Audio,Dual,SO-8	UP93	OP275GS(STATIC)	45496
U56	IC, SMT, CMOS, Octal Latch,SOIC-20	UDLS02	SN74AHC573DW(STATIC)	01295
U57	IC, SMT, real Time Clock, 12C, SOIC-8	UD89	ISL12022IBZ(STATIC)(RoHS)	
U58	IC. CMOS, EEPROM, 32kx8, 2.7V-5V, 8SOIC	UW98	AT25256AN-10SU-2.7(Static)(RoHS) ATMEL	
U59	IC, SMT, SRAM, 32Kx8, SOIC-28(Wide)	UDMS01	CY62256NLL-55SNXI(STATIC)(RoHS)	65786
U60	IC,SMT,Amp,35MHz,CurrentFeedback 1.1A,TO263-7	UT90	LT1210CR(STATIC)	64155
U61	IC, SMT, Backup Battery Supervisor, 10-MSOP	UP117	TPS3613-01DGS(STATIC)(RoHS) Texas	01295
U62	IC,Variable Gain Amp,SMT,90MHz,SOIC-8	UT79	AD603AR(STATIC)	45496
U63	IC,SMT,DAC,8-Bit,4-ch,SPI,SOIC-14	UMDS01	TLV5620ID(STATIC)	64155
U64	IC,SMT,RS-485 Transceiver,Sgl,SOIC-8	UDTS03	DS36C278TM(STATIC)	27014
U65	IC,SMT,2.5V Reference,0.1%,SOT-23-6	UX83	LT1790BIS6-2.5(STATIC)	64155
U66	IC,SMT,Opamp,Quad,Single Supply,SOIC-14	ULAS01	MC33074AD(STATIC)	04713
U67	IC,SMT,DAC,8-Bit,4-ch,SPI,SOIC-14	UMDS01	TLV5620ID(STATIC)	64155
U68	IC,SMT,Quad LVDS Rxcvr,3.3V,SOIC-16	UX76	DS90LV048ATM(STATIC)	27014

Continued from previous page

NAPC160B/01 Control/Interface PWB Assy, NXSeries

REFDES	DESCRIPTION	NAUTEL #	VENDOR #	OEM CODE
U69	IC,SMT,CMOS,8-Bit Shft Reg,Par I/P, SOIC-16	UDLS04	MC74HC165AD(STATIC)	04713
U70	IC,SMT,CMOS,Quad Tri-State Buffer, SOIC-14	UDLS06	MC74HC125AD(STATIC)	04713
U71	IC,SMT,CMOS,8-Bit Shft Reg,Par I/P, SOIC-16	UDLS04	MC74HC165AD(STATIC)	04713
U72	IC,SMT,CMOS,8-Bit Shft Reg,Par O/P, SOIC-16	UDLS05	MC74HC595AD(STATIC)	04713
U73	IC,SMT,CMOS,8-Bit Shft Reg,Par O/P, SOIC-16	UDLS05	MC74HC595AD(STATIC)	04713
U74	IC,SMT,Opamp,Quad,Single Supply,SOIC-14	ULAS01	MC33074AD(STATIC)	04713
U75	IC,SMT,Dual Optocoupler,SOIC-8	UDOS01	MOCD223-M(STATIC)	7D893
U76	IC,SMT,Dual Optocoupler,SOIC-8	UDOS01	MOCD223-M(STATIC)	7D893
U77	IC,SMT,Dual Optocoupler,SOIC-8	UDOS01	MOCD223-M(STATIC)	7D893
U78	IC,SMT,Dual Optocoupler,SOIC-8	UDOS01	MOCD223-M(STATIC)	7D893
U79	IC,SMT,Dual Optocoupler,SOIC-8	UDOS01	MOCD223-M(STATIC)	7D893
U80	IC,SMT,Dual Optocoupler,SOIC-8	UDOS01	MOCD223-M(STATIC)	7D893
U81	IC,SMT,Dual Optocoupler,SOIC-8	UDOS01	MOCD223-M(STATIC)	7D893
U82	IC,SMT,Dual Optocoupler,SOIC-8	UDOS01	MOCD223-M(STATIC)	7D893
U83	IC,SMT,Trans Array, 7 Darl.,SOIC-16	UDAS01	MC1413BD(STATIC)	04713
U84	IC,SMT,Trans Array, 7 Darl.,SOIC-16	UDAS01	MC1413BD(STATIC)	04713
U85	IC,SMT,Trans Array, 7 Darl.,SOIC-16	UDAS01	MC1413BD(STATIC)	04713
U86	IC,SMT,RS-232 Transceiver,3.3V,SO-16	UDTS05	ADM3202ARN(STATIC)	45496
U87	IC, SMT, 2-Input Logic, UHSUniv Config SC70-6	UD82	NC7SZ57P6X(Static)(RoHS)	07933
XBT01	Holder, 20mm Coin Cell, PWB Mt	BBHT01	1065	91833
XE01	Conn, Header, SIP,12 Pin Breakaway,.10 Ctr	JQ16	1-103185-2	09482
XE03	Conn, Header, SIP,12 Pin Breakaway,.10 Ctr	JQ16	1-103185-2	09482
Y01	Crystal, SMT, Fund, 11.0592MHz	XFPS11	HCM49-11.0592MABJ-UT(RoHS)	3DX59
Y02	Crystal,SMT,Fund,ParRes,32.768kHz, 20ppm, 12.5pF, -40-85C	XFPS10	ABS07-32.768KHZ-T(STATIC)(RoHS) Abracon Corp	

REFDES	DESCRIPTION	NAUTEL #	VENDOR #	OEM CODE
C001	Cap,SMT,Ceramic,22pF,2%,50V,C0G,0603	CCFS24	C0603C220G5GAC	31433
C002	Cap,SMT,Ceramic,100pF,2%,50V,C0G,0603	CCFS32	C0603C101G5GAC	31433
C003	Cap,SMT,Ceramic,100pF,2%,50V,C0G,0603	CCFS32	C0603C101G5GAC	31433
C004	Cap,SMT,Ceramic,22pF,2%,50V,C0G,0603	CCFS24	C0603C220G5GAC	31433
C005	Not Used	-	NOT USED	37338
C006	Cap,SMT,Ceramic,0.01uF,10%,50V,X7R,0603	CCFS04	C0603C103K5RAC	31433
C007	Cap,SMT,Ceramic,0.001uF,10%,50V,X7R,0603	CCFS01	C0603C102K5RAC	31433
C008	Cap, SMT, Ceramic, 0.1uF, 10%25V X7R, 0603	CCFS52	C0603C104K3RAC	31433
C009	Cap, SMT, Ceramic, 0.1uF, 10%25V X7R, 0603	CCFS52	C0603C104K3RAC	31433
C010	Not Used	-	NOT USED	37338
C011	Not Used	-	NOT USED	37338
C012	Cap,SMT,Ceramic,0.01uF,10%,50V,X7R,0603	CCFS04	C0603C103K5RAC	31433
C013	Cap,SMT,Ceramic,1uF,10%,25V,,X7R,1206	CCFS10	C1206C105K3RAC	31433
C014	Cap, SMT, Ceramic, 0.1uF, 10%25V X7R, 0603	CCFS52	C0603C104K3RAC	31433
C015	Cap,SMT,Ceramic,4700pF,2%,50V,C0G,1206	CCFS48	C1206C472G5GAC	31433
C016	Cap,SMT,Ceramic,0.01uF,10%,50V,X7R,0603	CCFS04	C0603C103K5RAC	31433
C017	Cap,SMT,Ceramic,1uF,10%,25V,,X7R,1206	CCFS10	C1206C105K3RAC	31433
C018	Cap,SMT,Ceramic,100pF,2%,50V,C0G,0603	CCFS32	C0603C101G5GAC	31433
C019	Cap,SMT,Ceramic,10uF,20%,6.3V,X5R,0805	CCFS57	C2012X5R0J106M	54583
C020	Cap,SMT,Ceramic,0.01uF,10%,50V,X7R,0603	CCFS04	C0603C103K5RAC	31433
C021	Cap,SMT,Ceramic,0.01uF,10%,50V,X7R,0603	CCFS04	C0603C103K5RAC	31433
C022	Cap, SMT, Ceramic, 0.1uF, 10%25V X7R, 0603	CCFS52	C0603C104K3RAC	31433
C023	Not Used	-	NOT USED	37338
C024	Not Used	-	NOT USED	37338
C025	Not Used	-	NOT USED	37338
C026	Cap, SMT, Ceramic, 0.1uF, 10%25V X7R, 0603	CCFS52	C0603C104K3RAC	31433
C027	Cap, SMT, Ceramic, 0.1uF, 10%25V X7R, 0603	CCFS52	C0603C104K3RAC	31433
C028	Cap,SMT,Ceramic,1uF,10%,25V,,X7R,1206	CCFS10	C1206C105K3RAC	31433
C029	Cap,SMT,Ceramic,1uF,10%,25V,,X7R,1206	CCFS10	C1206C105K3RAC	31433
C030	Cap,SMT,Ceramic,0.01uF,10%,50V,X7R,0603	CCFS04	C0603C103K5RAC	31433
C031	Cap,SMT,Ceramic,0.01uF,10%,50V,X7R,0603	CCFS04	C0603C103K5RAC	31433
C032	Cap, SMT, Ceramic, 0.1uF, 10%25V X7R, 0603	CCFS52	C0603C104K3RAC	31433
C033	Cap, SMT, Ceramic, 0.1uF, 10%25V X7R, 0603	CCFS52	C0603C104K3RAC	31433
C034	Cap, SMT, Ceramic, 0.1uF, 10%25V X7R, 0603	CCFS52	C0603C104K3RAC	31433
C035	Cap, SMT, Ceramic,47uF,20%,6.3V, 1210	CCFS53	C3225X5R0J476M(RoHS)	56289
C036	Cap, SMT, Ceramic,47uF,20%,6.3V, 1210	CCFS53	C3225X5R0J476M(RoHS)	56289
C037	Cap, SMT, Ceramic, 0.1uF, 10%25V X7R, 0603	CCFS52	C0603C104K3RAC	31433
C038	Cap, SMT, Ceramic, 0.1uF, 10%25V X7R, 0603	CCFS52	C0603C104K3RAC	31433

Continued from previous page

NAPE78A/01 Digital AM Exciter PWB Assy

REFDES	DESCRIPTION	NAUTEL #	VENDOR #	OEM CODE
C039	Cap, SMT, Ceramic,47uF,20%,6.3V, 1210	CCFS53	C3225X5R0J476M(RoHS)	56289
C040	Cap, SMT, Ceramic, 0.1uF, 10%25V X7R, 0603	CCFS52	C0603C104K3RAC	31433
C041	Cap,SMT,Ceramic,0.01uF,10%,50V,X7R,0603	CCFS04	C0603C103K5RAC	31433
C042	Cap, SMT, Ceramic, 0.1uF, 10%25V X7R, 0603	CCFS52	C0603C104K3RAC	31433
C043	Cap,SMT,Ceramic,0.01uF,10%,50V,X7R,0603	CCFS04	C0603C103K5RAC	31433
C044	Cap,SMT,Ceramic,0.01uF,10%,50V,X7R,0603	CCFS04	C0603C103K5RAC	31433
C045	Cap, SMT, Ceramic, 0.1uF, 10%25V X7R, 0603	CCFS52	C0603C104K3RAC	31433
C046	Cap,SMT,Ceramic,0.0047uF,10%,50V,X7R,0603	CCFS03	C0603C472K5RAC	31433
C047	Not Used	-	NOT USED	37338
C048	Cap,SMT,Ceramic,0.047uF,10%,50V,X7R,0603	CCFS06	C0603C473K5RAC	31433
C049	Cap,SMT,Ceramic,220pF,2%,50V,C0G,0603	CCFS34	C0603C221G5GAC	31433
C050	Cap,SMT,Ceramic,0.0047uF,10%,50V,X7R,0603	CCFS03	C0603C472K5RAC	31433
C051	Cap, SMT, Ceramic, 0.1uF, 10%25V X7R, 0603	CCFS52	C0603C104K3RAC	31433
C052	Cap, SMT, Ceramic, 0.1uF, 10%25V X7R, 0603	CCFS52	C0603C104K3RAC	31433
C053	Cap, SMT, Ceramic, 0.1uF, 10%25V X7R, 0603	CCFS52	C0603C104K3RAC	31433
C054	Cap, SMT, Ceramic, 0.1uF, 10%25V X7R, 0603	CCFS52	C0603C104K3RAC	31433
C055	Cap, SMT, Ceramic, 0.1uF, 10%25V X7R, 0603	CCFS52	C0603C104K3RAC	31433
C056	Cap, SMT, Ceramic, 0.1uF, 10%25V X7R, 0603	CCFS52	C0603C104K3RAC	31433
C057	Cap,SMT,Ceramic,100pF,2%,50V,C0G,0603	CCFS32	C0603C101G5GAC	31433
C058	Cap,SMT,Ceramic,100pF,2%,50V,C0G,0603	CCFS32	C0603C101G5GAC	31433
C059	Cap,SMT,Ceramic,1000pF,2%,50V,C0G,0805	CCFS42	C0805C102G5GAC	31433
C060	Cap, SMT, Ceramic, 0.1uF, 10%25V X7R, 0603	CCFS52	C0603C104K3RAC	31433
C061	Cap, SMT, Ceramic, 0.1uF, 10%25V X7R, 0603	CCFS52	C0603C104K3RAC	31433
C062	Cap, SMT, Ceramic, 0.1uF, 10%25V X7R, 0603	CCFS52	C0603C104K3RAC	31433
C063	Cap, SMT, Ceramic, 0.1uF, 10%25V X7R, 0603	CCFS52	C0603C104K3RAC	31433
C064	Cap, SMT, Ceramic, 0.1uF, 10%25V X7R, 0603	CCFS52	C0603C104K3RAC	31433
C065	Cap,SMT,Ceramic,1000pF,2%,50V,C0G,0805	CCFS42	C0805C102G5GAC	31433
C066	Cap,SMT,Ceramic,1000pF,2%,50V,C0G,0805	CCFS42	C0805C102G5GAC	31433
C067	Cap,SMT,Ceramic,1000pF,2%,50V,C0G,0805	CCFS42	C0805C102G5GAC	31433
C068	Cap, SMT, Ceramic, 0.1uF, 10%25V X7R, 0603	CCFS52	C0603C104K3RAC	31433
C069	Cap,SMT,Ceramic,18pF,2%,50V,C0G,0603	CCFS23	C0603C180G5GAC	31433
C070	Cap,SMT,Ceramic,1uF,10%,25V,,X7R,1206	CCFS10	C1206C105K3RAC	31433
C071	Cap, SMT, Ceramic, 0.1uF, 10%25V X7R, 0603	CCFS52	C0603C104K3RAC	31433
C072	Cap, SMT, Ceramic, 0.1uF, 10%25V X7R, 0603	CCFS52	C0603C104K3RAC	31433
C073	Cap,SMT,Ceramic,1000pF,2%,50V,C0G,0805	CCFS42	C0805C102G5GAC	31433
C074	Cap,SMT,Ceramic,1uF,10%,25V,,X7R,1206	CCFS10	C1206C105K3RAC	31433
C075	Cap,SMT,Ceramic,100pF,2%,50V,C0G,0603	CCFS32	C0603C101G5GAC	31433
C076	Cap,SMT,Ceramic,100pF,2%,50V,C0G,0603	CCFS32	C0603C101G5GAC	31433
C077	Cap,SMT,Ceramic,18pF,2%,50V,C0G,0603	CCFS23	C0603C180G5GAC	31433

Continued from previous page

REFDES	DESCRIPTION	NAUTEL #	VENDOR #	OEM CODE
C078	Cap, SMT, Ceramic, 0.1uF, 10%25V X7R, 0603	CCFS52	C0603C104K3RAC	31433
C079	Cap, SMT, Ceramic, 0.1uF, 10%25V X7R, 0603	CCFS52	C0603C104K3RAC	31433
C080	Cap,SMT,Ceramic,10uF,20%,6.3V,X5R,0805	CCFS57	C2012X5R0J106M	54583
C081	Cap, SMT, Ceramic, 0.1uF, 10%25V X7R, 0603	CCFS52	C0603C104K3RAC	31433
C082	Cap, SMT, Ceramic, 0.1uF, 10%25V X7R, 0603	CCFS52	C0603C104K3RAC	31433
C083	Cap,SMT,Ceramic,10uF,20%,6.3V,X5R,0805	CCFS57	C2012X5R0J106M	54583
C084	Cap,SMT,Ceramic,10uF,20%,6.3V,X5R,0805	CCFS57	C2012X5R0J106M	54583
C085	Cap,SMT,Ceramic,10uF,20%,6.3V,X5R,0805	CCFS57	C2012X5R0J106M	54583
C086	Cap, SMT, Ceramic, 0.1uF, 10%25V X7R, 0603	CCFS52	C0603C104K3RAC	31433
C087	Cap, SMT, Ceramic, 0.1uF, 10%25V X7R, 0603	CCFS52	C0603C104K3RAC	31433
C088	Cap, SMT, Ceramic, 0.1uF, 10%25V X7R, 0603	CCFS52	C0603C104K3RAC	31433
C089	Cap, SMT, Ceramic, 0.1uF, 10%25V X7R, 0603	CCFS52	C0603C104K3RAC	31433
C090	Cap, SMT, Ceramic, 0.1uF, 10%25V X7R, 0603	CCFS52	C0603C104K3RAC	31433
C091	Cap,SMT,Ceramic,10uF,20%,6.3V,X5R,0805	CCFS57	C2012X5R0J106M	54583
C092	Cap, SMT, Ceramic, 0.1uF, 10%25V X7R, 0603	CCFS52	C0603C104K3RAC	31433
C093	Cap, SMT, Ceramic, 0.1uF, 10%25V X7R, 0603	CCFS52	C0603C104K3RAC	31433
C094	Cap, SMT, Ceramic, 0.1uF, 10%25V X7R, 0603	CCFS52	C0603C104K3RAC	31433
C095	Cap, SMT, Ceramic, 0.1uF, 10%25V X7R, 0603	CCFS52	C0603C104K3RAC	31433
C096	Cap, SMT, Ceramic, 0.1uF, 10%25V X7R, 0603	CCFS52	C0603C104K3RAC	31433
C097	Cap, SMT, Ceramic, 0.1uF, 10%25V X7R, 0603	CCFS52	C0603C104K3RAC	31433
C098	Cap, SMT, Ceramic, 0.1uF, 10%25V X7R, 0603	CCFS52	C0603C104K3RAC	31433
C099	Cap, SMT, Ceramic, 0.1uF, 10%25V X7R, 0603	CCFS52	C0603C104K3RAC	31433
C100	Cap, SMT, Ceramic, 0.1uF, 10%25V X7R, 0603	CCFS52	C0603C104K3RAC	31433
C101	Cap, SMT, Ceramic, 0.1uF, 10%25V X7R, 0603	CCFS52	C0603C104K3RAC	31433
C102	Cap, SMT, Ceramic, 0.1uF, 10%25V X7R, 0603	CCFS52	C0603C104K3RAC	31433
C103	Cap, SMT, Ceramic, 0.1uF, 10%25V X7R, 0603	CCFS52	C0603C104K3RAC	31433
C104	Cap, SMT, Ceramic, 0.1uF, 10%25V X7R, 0603	CCFS52	C0603C104K3RAC	31433
C105	Cap, SMT, Ceramic, 0.1uF, 10%25V X7R, 0603	CCFS52	C0603C104K3RAC	31433
C106	Cap, SMT, Ceramic, 0.1uF, 10%25V X7R, 0603	CCFS52	C0603C104K3RAC	31433
C107	Cap, SMT, Ceramic, 0.1uF, 10%25V X7R, 0603	CCFS52	C0603C104K3RAC	31433
C108	Cap, SMT, Ceramic, 0.1uF, 10%25V X7R, 0603	CCFS52	C0603C104K3RAC	31433
C109	Cap, SMT, Ceramic, 0.1uF, 10%25V X7R, 0603	CCFS52	C0603C104K3RAC	31433
C110	Cap, SMT, Ceramic, 0.1uF, 10%25V X7R, 0603	CCFS52	C0603C104K3RAC	31433
C111	Cap, SMT, Ceramic, 0.1uF, 10%25V X7R, 0603	CCFS52	C0603C104K3RAC	31433
C112	Cap, SMT, Ceramic, 0.1uF, 10%25V X7R, 0603	CCFS52	C0603C104K3RAC	31433
C113	Cap, SMT, Ceramic, 0.1uF, 10%25V X7R, 0603	CCFS52	C0603C104K3RAC	31433
C114	Cap, SMT, Ceramic, 0.1uF, 10%25V X7R, 0603	CCFS52	C0603C104K3RAC	31433
C115	Cap, SMT, Ceramic, 0.1uF, 10%25V X7R, 0603	CCFS52	C0603C104K3RAC	31433
C116	Cap, SMT, Ceramic, 0.1uF, 10%25V X7R, 0603	CCFS52	C0603C104K3RAC	31433

Continued from previous page

NAPE78A/01 Digital AM Exciter PWB Assy

REFDES	DESCRIPTION	NAUTEL #	VENDOR #	OEM CODE
C117	Cap, SMT, Ceramic, 0.1uF, 10%25V X7R, 0603	CCFS52	C0603C104K3RAC	31433
C118	Cap, SMT, Ceramic, 0.1uF, 10%25V X7R, 0603	CCFS52	C0603C104K3RAC	31433
C119	Cap, SMT, Ceramic, 0.1uF, 10%25V X7R, 0603	CCFS52	C0603C104K3RAC	31433
C120	Cap, SMT, Ceramic, 0.1uF, 10%25V X7R, 0603	CCFS52	C0603C104K3RAC	31433
C121	Cap, SMT, Ceramic, 0.1uF, 10%25V X7R, 0603	CCFS52	C0603C104K3RAC	31433
C122	Cap, SMT, Ceramic, 0.1uF, 10%25V X7R, 0603	CCFS52	C0603C104K3RAC	31433
C123	Cap,SMT,Ceramic,10uF,20%,6.3V,X5R,0805	CCFS57	C2012X5R0J106M	54583
C124	Cap,SMT,Ceramic,10uF,20%,6.3V,X5R,0805	CCFS57	C2012X5R0J106M	54583
C125	Cap, SMT, Ceramic, 0.1uF, 10%25V X7R, 0603	CCFS52	C0603C104K3RAC	31433
C126	Cap, SMT, Ceramic, 0.1uF, 10%25V X7R, 0603	CCFS52	C0603C104K3RAC	31433
C127	Cap, SMT, Ceramic, 0.1uF, 10%25V X7R, 0603	CCFS52	C0603C104K3RAC	31433
C128	Cap,SMT,Ceramic,10uF,20%,6.3V,X5R,0805	CCFS57	C2012X5R0J106M	54583
C129	Cap, SMT, Ceramic, 0.1uF, 10%25V X7R, 0603	CCFS52	C0603C104K3RAC	31433
C130	Cap, SMT, Ceramic, 0.1uF, 10%25V X7R, 0603	CCFS52	C0603C104K3RAC	31433
C131	Cap, SMT, Ceramic, 0.1uF, 10%25V X7R, 0603	CCFS52	C0603C104K3RAC	31433
C132	Cap, SMT, Ceramic, 0.1uF, 10%25V X7R, 0603	CCFS52	C0603C104K3RAC	31433
C133	Cap, SMT, Ceramic, 0.1uF, 10%25V X7R, 0603	CCFS52	C0603C104K3RAC	31433
C134	Cap, SMT, Ceramic, 0.1uF, 10%25V X7R, 0603	CCFS52	C0603C104K3RAC	31433
C135	Cap, SMT, Ceramic, 0.1uF, 10%25V X7R, 0603	CCFS52	C0603C104K3RAC	31433
C136	Cap, SMT, Ceramic, 0.1uF, 10%25V X7R, 0603	CCFS52	C0603C104K3RAC	31433
C137	Cap, SMT, Ceramic, 0.1uF, 10%25V X7R, 0603	CCFS52	C0603C104K3RAC	31433
C138	Cap, SMT, Ceramic, 0.1uF, 10%25V X7R, 0603	CCFS52	C0603C104K3RAC	31433
C139	Cap, SMT, Ceramic, 0.1uF, 10%25V X7R, 0603	CCFS52	C0603C104K3RAC	31433
C140	Cap,SMT,Ceramic,10uF,20%,6.3V,X5R,0805	CCFS57	C2012X5R0J106M	54583
C141	Cap, SMT, Ceramic, 0.1uF, 10%25V X7R, 0603	CCFS52	C0603C104K3RAC	31433
C142	Cap, SMT, Ceramic, 0.1uF, 10%25V X7R, 0603	CCFS52	C0603C104K3RAC	31433
C143	Cap, SMT, Ceramic, 0.1uF, 10%25V X7R, 0603	CCFS52	C0603C104K3RAC	31433
C144	Cap, SMT, Ceramic, 0.1uF, 10%25V X7R, 0603	CCFS52	C0603C104K3RAC	31433
C145	Cap, SMT, Ceramic, 0.1uF, 10%25V X7R, 0603	CCFS52	C0603C104K3RAC	31433
C146	Cap, SMT, Ceramic, 0.1uF, 10%25V X7R, 0603	CCFS52	C0603C104K3RAC	31433
C147	Cap, SMT, Ceramic, 0.1uF, 10%25V X7R, 0603	CCFS52	C0603C104K3RAC	31433
C148	Cap, SMT, Ceramic, 0.1uF, 10%25V X7R, 0603	CCFS52	C0603C104K3RAC	31433
C149	Cap, SMT, Ceramic, 0.1uF, 10%25V X7R, 0603	CCFS52	C0603C104K3RAC	31433
C150	Cap, SMT, Ceramic, 0.1uF, 10%25V X7R, 0603	CCFS52	C0603C104K3RAC	31433
C151	Cap,SMT,Ceramic,10uF,20%,6.3V,X5R,0805	CCFS57	C2012X5R0J106M	54583
C152	Cap, SMT, Ceramic, 0.1uF, 10%25V X7R, 0603	CCFS52	C0603C104K3RAC	31433
C153	Cap, SMT, Ceramic, 0.1uF, 10%25V X7R, 0603	CCFS52	C0603C104K3RAC	31433
C154	Cap, SMT, Ceramic, 0.1uF, 10%25V X7R, 0603	CCFS52	C0603C104K3RAC	31433
C155	Cap, SMT, Ceramic, 0.1uF, 10%25V X7R, 0603	CCFS52	C0603C104K3RAC	31433

Continued from previous page

NAPE78A/01 Digital AM Exciter PWB Assy

REFDES	DESCRIPTION	NAUTEL #	VENDOR #	OEM CODE
C156	Cap, SMT, Ceramic, 0.1uF, 10%25V X7R, 0603	CCFS52	C0603C104K3RAC	31433
C157	Cap, SMT, Ceramic, 0.1uF, 10%25V X7R, 0603	CCFS52	C0603C104K3RAC	31433
C158	Cap, SMT, Ceramic, 0.1uF, 10%25V X7R, 0603	CCFS52	C0603C104K3RAC	31433
C159	Cap, SMT, Ceramic, 0.1uF, 10%25V X7R, 0603	CCFS52	C0603C104K3RAC	31433
C160	Cap, SMT, Ceramic, 0.1uF, 10%25V X7R, 0603	CCFS52	C0603C104K3RAC	31433
C161	Cap, SMT, Ceramic, 0.1uF, 10%25V X7R, 0603	CCFS52	C0603C104K3RAC	31433
C162	Cap, SMT, Ceramic, 0.1uF, 10%25V X7R, 0603	CCFS52	C0603C104K3RAC	31433
C163	Cap, SMT, Ceramic, 0.1uF, 10%25V X7R, 0603	CCFS52	C0603C104K3RAC	31433
C164	Cap, SMT, Ceramic, 0.1uF, 10%25V X7R, 0603	CCFS52	C0603C104K3RAC	31433
C165	Cap, SMT, Ceramic, 0.1uF, 10%25V X7R, 0603	CCFS52	C0603C104K3RAC	31433
C166	Cap, SMT, Ceramic, 0.1uF, 10%25V X7R, 0603	CCFS52	C0603C104K3RAC	31433
C167	Cap, SMT, Ceramic, 0.1uF, 10%25V X7R, 0603	CCFS52	C0603C104K3RAC	31433
C168	Cap, SMT, Ceramic, 0.1uF, 10%25V X7R, 0603	CCFS52	C0603C104K3RAC	31433
C169	Cap, SMT, Ceramic, 0.1uF, 10%25V X7R, 0603	CCFS52	C0603C104K3RAC	31433
C170	Cap, SMT, Ceramic, 0.1uF, 10%25V X7R, 0603	CCFS52	C0603C104K3RAC	31433
C171	Cap, SMT, Ceramic, 0.1uF, 10%25V X7R, 0603	CCFS52	C0603C104K3RAC	31433
C172	Cap, SMT, Ceramic, 0.1uF, 10%25V X7R, 0603	CCFS52	C0603C104K3RAC	31433
C173	Cap, SMT, Ceramic, 0.1uF, 10%25V X7R, 0603	CCFS52	C0603C104K3RAC	31433
C174	Cap, SMT, Ceramic, 0.1uF, 10%25V X7R, 0603	CCFS52	C0603C104K3RAC	31433
C175	Cap, SMT, Ceramic, 0.1uF, 10%25V X7R, 0603	CCFS52	C0603C104K3RAC	31433
C176	Cap, SMT, Ceramic, 0.1uF, 10%25V X7R, 0603	CCFS52	C0603C104K3RAC	31433
C177	Cap,SMT,Ceramic,10uF,20%,6.3V,X5R,0805	CCFS57	C2012X5R0J106M	54583
C178	Cap, SMT, Ceramic, 0.1uF, 10%25V X7R, 0603	CCFS52	C0603C104K3RAC	31433
C179	Cap, SMT, Ceramic, 0.1uF, 10%25V X7R, 0603	CCFS52	C0603C104K3RAC	31433
C180	Cap, SMT, Ceramic, 0.1uF, 10%25V X7R, 0603	CCFS52	C0603C104K3RAC	31433
C181	Cap, SMT, Ceramic, 0.1uF, 10%25V X7R, 0603	CCFS52	C0603C104K3RAC	31433
C182	Cap, SMT, Ceramic, 0.1uF, 10%25V X7R, 0603	CCFS52	C0603C104K3RAC	31433
C183	Cap, SMT, Ceramic, 0.1uF, 10%25V X7R, 0603	CCFS52	C0603C104K3RAC	31433
C184	Cap, SMT, Ceramic, 0.1uF, 10%25V X7R, 0603	CCFS52	C0603C104K3RAC	31433
C185	Cap, SMT, Ceramic, 0.1uF, 10%25V X7R, 0603	CCFS52	C0603C104K3RAC	31433
C186	Cap, SMT, Ceramic, 0.1uF, 10%25V X7R, 0603	CCFS52	C0603C104K3RAC	31433
C187	Cap, SMT, Ceramic, 0.1uF, 10%25V X7R, 0603	CCFS52	C0603C104K3RAC	31433
C188	Cap, SMT, Ceramic, 0.1uF, 10%25V X7R, 0603	CCFS52	C0603C104K3RAC	31433
C189	Cap,SMT,Ceramic,10uF,20%,6.3V,X5R,0805	CCFS57	C2012X5R0J106M	54583
C190	Cap, SMT, Ceramic, 0.1uF, 10%25V X7R, 0603	CCFS52	C0603C104K3RAC	31433
C191	Cap, SMT, Ceramic, 0.1uF, 10%25V X7R, 0603	CCFS52	C0603C104K3RAC	31433
C192	Cap, SMT, Ceramic, 0.1uF, 10%25V X7R, 0603	CCFS52	C0603C104K3RAC	31433
C193	Cap,SMT,Ceramic,10uF,20%,6.3V,X5R,0805	CCFS57	C2012X5R0J106M	54583
C194	Cap,SMT,Ceramic,10uF,20%,6.3V,X5R,0805	CCFS57	C2012X5R0J106M	54583

Continued from previous page

NAPE78A/01 Digital AM Exciter PWB Assy

REFDES	DESCRIPTION	NAUTEL #	VENDOR #	OEM CODE
C195	Cap, SMT, Ceramic, 0.1uF, 10%25V X7R, 0603	CCFS52	C0603C104K3RAC	31433
C196	Cap, SMT, Ceramic, 0.1uF, 10%25V X7R, 0603	CCFS52	C0603C104K3RAC	31433
C197	Cap, SMT, Ceramic, 0.1uF, 10%25V X7R, 0603	CCFS52	C0603C104K3RAC	31433
C198	Cap, SMT, Ceramic, 0.1uF, 10%25V X7R, 0603	CCFS52	C0603C104K3RAC	31433
C199	Cap, SMT, Ceramic, 0.1uF, 10%25V X7R, 0603	CCFS52	C0603C104K3RAC	31433
C200	Cap, SMT, Ceramic, 0.1uF, 10%25V X7R, 0603	CCFS52	C0603C104K3RAC	31433
C201	Cap, SMT, Ceramic, 0.1uF, 10%25V X7R, 0603	CCFS52	C0603C104K3RAC	31433
C202	Cap, SMT, Ceramic, 0.1uF, 10%25V X7R, 0603	CCFS52	C0603C104K3RAC	31433
C203	Cap, SMT, Ceramic, 0.1uF, 10%25V X7R, 0603	CCFS52	C0603C104K3RAC	31433
C204	Cap, SMT, Ceramic, 0.1uF, 10%25V X7R, 0603	CCFS52	C0603C104K3RAC	31433
C205	Cap, SMT, Ceramic, 0.1uF, 10%25V X7R, 0603	CCFS52	C0603C104K3RAC	31433
C206	Cap,SMT,Ceramic,10uF,20%,6.3V,X5R,0805	CCFS57	C2012X5R0J106M	54583
C207	Cap, SMT, Ceramic, 0.1uF, 10%25V X7R, 0603	CCFS52	C0603C104K3RAC	31433
C208	Cap, SMT, Ceramic, 0.1uF, 10%25V X7R, 0603	CCFS52	C0603C104K3RAC	31433
C209	Cap, SMT, Ceramic, 0.1uF, 10%25V X7R, 0603	CCFS52	C0603C104K3RAC	31433
C210	Cap, SMT, Ceramic, 0.1uF, 10%25V X7R, 0603	CCFS52	C0603C104K3RAC	31433
C211	Cap,SMT,Ceramic,10uF,20%,6.3V,X5R,0805	CCFS57	C2012X5R0J106M	54583
C212	Cap, SMT, Ceramic, 0.1uF, 10%25V X7R, 0603	CCFS52	C0603C104K3RAC	31433
C213	Cap, SMT, Ceramic, 0.1uF, 10%25V X7R, 0603	CCFS52	C0603C104K3RAC	31433
C214	Cap, SMT, Ceramic, 0.1uF, 10%25V X7R, 0603	CCFS52	C0603C104K3RAC	31433
C215	Cap, SMT, Ceramic, 0.1uF, 10%25V X7R, 0603	CCFS52	C0603C104K3RAC	31433
C216	Cap, SMT, Ceramic, 0.1uF, 10%25V X7R, 0603	CCFS52	C0603C104K3RAC	31433
C217	Cap, SMT, Ceramic, 0.1uF, 10%25V X7R, 0603	CCFS52	C0603C104K3RAC	31433
C218	Cap, SMT, Ceramic, 0.1uF, 10%25V X7R, 0603	CCFS52	C0603C104K3RAC	31433
C219	Cap, SMT, Ceramic, 0.1uF, 10%25V X7R, 0603	CCFS52	C0603C104K3RAC	31433
C220	Cap,SMT,Ceramic,0.001uF,10%,50V,X7R,0603	CCFS01	C0603C102K5RAC	31433
DS01	Diode, SMT, LED, Green,(560nm), 0603	QDLS01	597-5312-402F(STATIC)(RoHS)	83330
DS02	Diode, SMT, LED, Green,(560nm), 0603	QDLS01	597-5312-402F(STATIC)(RoHS)	83330
DS03	Diode, SMT, LED, Green,(560nm), 0603	QDLS01	597-5312-402F(STATIC)(RoHS)	83330
DS04	Diode, SMT, LED, Green,(560nm), 0603	QDLS01	597-5312-402F(STATIC)(RoHS)	83330
E01	Conn, Post Shunt, 2 Pos, .10 Centreline	JQ15	390088-2	09482
J01	Conn, Plug, D-Sub, 25 pin, PWB Mt	JS12	K22X-B25P-NJ	63590
J02	Conn, Socket, D-Sub, 25 pin, PWB Mt	JS13	K22-B25S-NJ	22421
J03	Conn, Socket, D-Sub, 9-Pin,Vertical PWB	JS50	164A16669X	C3057
J04	Conn, Header, SIP,12 Pin Breakaway,.10 Ctr	JQ16	1-103185-2	09482
J05	Conn, Header,Square Post,Gold,Dual,40-pin	JF47	4-102973-0	09482
J06	Conn, Header,Square Post,Gold,Dual,40-pin	JF47	4-102973-0	09482

Continued from previous page

NAPE78A/01 Digital AM Exciter PWB Assy

REFDES	DESCRIPTION	NAUTEL #	VENDOR #	OEM CODE
J07	Conn, Header,Square Post,Gold,Dual,40-pin	JF47	4-102973-0	09482
L01	Inductor,SMT,390nH,375mA,2520	LS21	NLV25T-R39J-PF(ROHS)	TDK
L02	Inductor,SMT,560nH,325mA,2520	LS20	NLV25T-R56J-PF(ROHS)	TDK
L03	Inductor,SMT,390nH,375mA,2520	LS21	NLV25T-R39J-PF(ROHS)	TDK
L04	Inductor,SMT,390nH,375mA,2520	LS21	NLV25T-R39J-PF(ROHS)	TDK
L05	Inductor,SMT,560nH,325mA,2520	LS20	NLV25T-R56J-PF(ROHS)	TDK
L06	Inductor,SMT,390nH,375mA,2520	LS21	NLV25T-R39J-PF(ROHS)	TDK
L07	Not Used	-	NOT USED	37338
L08	Inductor, SMT, Choke, 600ohms,2A, 0805	LCFS01	ILHB0805RK601V	56845
L09	Not Used	-	NOT USED	37338
L10	Inductor, SMT, Choke, 600ohms,2A, 0805	LCFS01	ILHB0805RK601V	56845
L11	Inductor, SMT, Choke, 600ohms,2A, 0805	LCFS01	ILHB0805RK601V	56845
L12	Inductor,SMT,Pwr,Shielded,P116 7 Series,3.5A,3.6uH	LS17	P1167.362	01961
L13	Inductor, SMT, Choke, 600ohms,2A, 0805	LCFS01	ILHB0805RK601V	56845
L14	Inductor, SMT, Choke, 600ohms,2A, 0805	LCFS01	ILHB0805RK601V	56845
L15	Inductor, SMT, Choke, 600ohms,2A, 0805	LCFS01	ILHB0805RK601V	56845
L16	Inductor, SMT, Choke, 600ohms,2A, 0805	LCFS01	ILHB0805RK601V	56845
R01	Resistor, SMT, 200ohm, 1%,1/10W, 0603	RFFS87	RK73H1JLTD2000F	59124
R02	Resistor,SMT,MF,1000ohms,1%,1/10W,0603	RFFS38	RK73H1JLTD1001F	59124
R03	Not Used	-	NOT USED	37338
R04	Resistor,SMT,MF,475ohms,1%,1/10W,0603	RFFS34	RK73H1JLTD4750F	59124
R05	Resistor, SMT, 200ohm, 1%,1/10W, 0603	RFFS87	RK73H1JLTD2000F	59124
R06	Resistor,SMT,MF,10.0Kohms,1%,1/10W,0603	RFFS50	RK73H1JLTD1002F	59124
R07	Not Used	-	NOT USED	37338
R08	Resistor,SMT,MF,274ohms,1%,1/10W,0603	RFFS31	RK73H1JLTD2740F	59124
R09	Not Used	-	NOT USED	37338
R10	Resistor,SMT,MF,150Kohms,1%,1/10W,0603	RFFS64	RK73H1JLTD1503F	59124
R11	Resistor,SMT,MF,2210ohms,1%,1/10W,0603	RFFS42	RK73H1JLTD2211F	59124
R12	Resistor,SMT,MF,56.2Kohms,1%,1/10W,0603	RFFS59	RK73H1JLTD5622F	59124
R13	Resistor,SMT,MF,150ohms,1%,1/10W,0603	RFFS28	RK73H1JLTD1500F	59124
R14	Resistor,SMT,MF,150ohms,1%,1/10W,0603	RFFS28	RK73H1JLTD1500F	59124
R15	Resistor,SMT,MF,150ohms,1%,1/10W,0603	RFFS28	RK73H1JLTD1500F	59124
R16	Resistor,SMT,MF,150ohms,1%,1/10W,0603	RFFS28	RK73H1JLTD1500F	59124
R17	Resistor,SMT,MF,1.00ohms,1%,1/10W,0603	RFFS02	RK73H1JLTD1R00F	59124
R18	Resistor,SMT,MF,22.1ohms,1%,1/10W,0603	RFFS18	RK73H1JLTD22R1F	59124
R19	Resistor,SMT,MF,100ohms,1%,1/10W,0603	RFFS26	RK73H1JLTD1000F	59124

Continued from previous page

NAPE78A/01 Digital AM Exciter PWB Assy

REFDES	DESCRIPTION	NAUTEL #	VENDOR #	OEM CODE
R20	Resistor,SMT,MF,1.00ohms,1%,1/10W,0603	RFFS02	RK73H1JLTD1R00F	59124
R21	Resistor,SMT,MF,49.9R,1%,1/10W0603	RAE34	RK73H1JT49R9F	59124
R22	Resistor,SMT,MF,22.1ohms,1%,1/10W,0603	RFFS18	RK73H1JLTD22R1F	59124
R23	Resistor,SMT,MF,49.9R,1%,1/10W0603	RAE34	RK73H1JT49R9F	59124
R24	Resistor,SMT,MF,22.1ohms,1%,1/10W,0603	RFFS18	RK73H1JLTD22R1F	59124
R25	Resistor,SMT,MF,10.0ohms,1%,1/10W,0603	RFFS14	RK73H1JLTD10R0F	59124
R26	Resistor,SMT,MF,1000ohms,1%,1/10W,0603	RFFS38	RK73H1JLTD1001F	59124
R27	Not Used	-	NOT USED	37338
R28	Not Used	-	NOT USED	37338
R29	Not Used	-	NOT USED	37338
R30	Resistor,SMT,MF,121ohms,1%,1/10W,0603	RFFS27	RK73H1JLTD1210F	59124
R31	Resistor,SMT,MF,100ohms,1%,1/10W,0603	RFFS26	RK73H1JLTD1000F	59124
R32	Resistor,SMT,MF,392ohms,1%,1/10W,0603	RFFS33	RK73H1JLTD3920F	59124
R33	Resistor,SMT,MF,56.2Kohms,1%,1/10W,0603	RFFS59	RK73H1JLTD5622F	59124
R34	Resistor,SMT,MF,1.00ohms,1%,1/10W,0603	RFFS02	RK73H1JLTD1R00F	59124
R35	Resistor,SMT,MF,1.00ohms,1%,1/10W,0603	RFFS02	RK73H1JLTD1R00F	59124
R36	Resistor,SMT,MF,49.9R,1%,1/10W0603	RAE34	RK73H1JT49R9F	59124
R37	Resistor,SMT,MF,22.1ohms,1%,1/10W,0603	RFFS18	RK73H1JLTD22R1F	59124
R38	Resistor,SMT,MF,49.9R,1%,1/10W0603	RAE34	RK73H1JT49R9F	59124
R39	Resistor,SMT,MF,49.9R,1%,1/10W0603	RAE34	RK73H1JT49R9F	59124
R40	Resistor,SMT,MF,49.9R,1%,1/10W0603	RAE34	RK73H1JT49R9F	59124
R41	Resistor,SMT,MF,22.1ohms,1%,1/10W,0603	RFFS18	RK73H1JLTD22R1F	59124
R42	Resistor,SMT,MF,10.0ohms,1%,1/10W,0603	RFFS14	RK73H1JLTD10R0F	59124
R43	Resistor,SMT,MF,49.9R,1%,1/10W0603	RAE34	RK73H1JT49R9F	59124
R44	Not Used	-	NOT USED	37338
R45	Resistor,SMT,MF,1000ohms,1%,1/10W,0603	RFFS38	RK73H1JLTD1001F	59124
R46	Not Used	-	NOT USED	37338
R47	Not Used	-	NOT USED	37338
R48	Resistor,SMT,MF,475ohms,1%,1/10W,0603	RFFS34	RK73H1JLTD4750F	59124
R49	Resistor,SMT,MF,274ohms,1%,1/10W,0603	RFFS31	RK73H1JLTD2740F	59124
R50	Resistor,SMT,MF,28.7 KOhms,1%,1/10W,0603	RFFS83	RK73H1JT2872F	59124
R51	Resistor,SMT,MF,221ohms,1%,1/10W,0603	RFFS30	RK73H1JLTD2210F	59124
R52	Resistor,SMT,MF,10.0Kohms,1%,1/10W,0603	RFFS50	RK73H1JLTD1002F	59124
R53	Resistor,SMT,MF,100ohms,1%,1/10W,0603	RFFS26	RK73H1JLTD1000F	59124
R54	Resistor,SMT,MF,49.9R,1%,1/10W0603	RAE34	RK73H1JT49R9F	59124
R55	Resistor,SMT,MF,49.9R,1%,1/10W0603	RAE34	RK73H1JT49R9F	59124
R56	Resistor,SMT,MF,49.9R,1%,1/10W0603	RAE34	RK73H1JT49R9F	59124
R57	Resistor,SMT,MF,3920ohms,1%,1/10W,0603	RFFS45	RK73H1JLTD3921F	59124
R58	Resistor,SMT,MF,10.0Kohms,1%,1/10W,0603	RFFS50	RK73H1JLTD1002F	59124

Continued from previous page

NAPE78A/01 Digital AM Exciter PWB Assy

REFDES	DESCRIPTION	NAUTEL #	VENDOR #	OEM CODE
R59	Resistor,SMT,MF,10.0Kohms,1%,1/10W,0603	RFFS50	RK73H1JLTD1002F	59124
R60	Resistor,SMT,MF,10.0Kohms,1%,1/10W,0603	RFFS50	RK73H1JLTD1002F	59124
R61	Resistor,SMT,MF,10.0Kohms,1%,1/10W,0603	RFFS50	RK73H1JLTD1002F	59124
R62	Resistor,SMT,MF,10.0Kohms,1%,1/10W,0603	RFFS50	RK73H1JLTD1002F	59124
R63	Resistor,SMT,MF,10.0Kohms,1%,1/10W,0603	RFFS50	RK73H1JLTD1002F	59124
R64	Resistor,SMT,MF,10.0Kohms,1%,1/10W,0603	RFFS50	RK73H1JLTD1002F	59124
R65	Resistor,SMT,MF,10.0Kohms,1%,1/10W,0603	RFFS50	RK73H1JLTD1002F	59124
R66	Resistor,SMT,MF,10.0Kohms,1%,1/10W,0603	RFFS50	RK73H1JLTD1002F	59124
R67	Resistor,SMT,MF,10.0Kohms,1%,1/10W,0603	RFFS50	RK73H1JLTD1002F	59124
R68	Resistor,SMT,MF,274ohms,1%,1/10W,0603	RFFS31	RK73H1JLTD2740F	59124
R69	Resistor,SMT,MF,562ohms,1%,1/10W,0603	RFFS35	RK73H1JLTD5620F	59124
R70	Resistor,SMT,MF,10.0Kohms,1%,1/10W,0603	RFFS50	RK73H1JLTD1002F	59124
R71	Resistor,SMT,MF,10.0Kohms,1%,1/10W,0603	RFFS50	RK73H1JLTD1002F	59124
R72	Resistor,SMT,MF,1210ohms,1%,1/10W,0603	RFFS39	RK73H1JLTD1211F	59124
R73	Resistor,SMT,MF,1500ohms,1%,1/10W,0603	RFFS40	RK73H1JLTD1501F	59124
R74	Resistor,SMT,MF,1000ohms,1%,1/10W,0603	RFFS38	RK73H1JLTD1001F	59124
R75	Resistor,SMT,MF,10.0Kohms,1%,1/10W,0603	RFFS50	RK73H1JLTD1002F	59124
R76	Resistor,SMT,MF,1000ohms,1%,1/10W,0603	RFFS38	RK73H1JLTD1001F	59124
R77	Resistor,SMT,MF,10.0Kohms,1%,1/10W,0603	RFFS50	RK73H1JLTD1002F	59124
R78	Resistor,SMT,MF,10.0Kohms,1%,1/10W,0603	RFFS50	RK73H1JLTD1002F	59124
R79	Resistor,SMT,MF,10.0Kohms,1%,1/10W,0603	RFFS50	RK73H1JLTD1002F	59124
R80	Resistor,SMT,MF,10.0Kohms,1%,1/10W,0603	RFFS50	RK73H1JLTD1002F	59124
R81	Resistor,SMT,MF,22.1ohms,1%,1/10W,0603	RFFS18	RK73H1JLTD22R1F	59124
R82	Resistor,SMT,MF,10.0Kohms,1%,1/10W,0603	RFFS50	RK73H1JLTD1002F	59124
R83	Resistor,SMT,MF,10.0Kohms,1%,1/10W,0603	RFFS50	RK73H1JLTD1002F	59124
R84	Resistor,SMT,MF,10.0Kohms,1%,1/10W,0603	RFFS50	RK73H1JLTD1002F	59124
R85	Resistor,SMT,MF,10.0Kohms,1%,1/10W,0603	RFFS50	RK73H1JLTD1002F	59124
R86	Resistor,SMT,MF,22.1ohms,1%,1/10W,0603	RFFS18	RK73H1JLTD22R1F	59124
R87	Resistor,SMT,MF,3920ohms,1%,1/10W,0603	RFFS45	RK73H1JLTD3921F	59124
R88	Resistor,SMT,MF,3920ohms,1%,1/10W,0603	RFFS45	RK73H1JLTD3921F	59124
R89	Resistor,SMT,MF,12.1Kohms,1%,1/10W,0603	RFFS51	RK73H1JLTD1212F	59124
R90	Resistor,SMT,MF,10.0Kohms,1%,1/10W,0603	RFFS50	RK73H1JLTD1002F	59124
R91	Resistor,SMT,MF,10.0Kohms,1%,1/10W,0603	RFFS50	RK73H1JLTD1002F	59124
R92	Resistor,SMT,MF,10.0Kohms,1%,1/10W,0603	RFFS50	RK73H1JLTD1002F	59124
R93	Resistor,SMT,MF,10.0Kohms,1%,1/10W,0603	RFFS50	RK73H1JLTD1002F	59124
R94	Resistor,SMT,MF,10.0Kohms,1%,1/10W,0603	RFFS50	RK73H1JLTD1002F	59124
R95	Resistor,SMT,MF,10.0Kohms,1%,1/10W,0603	RFFS50	RK73H1JLTD1002F	59124
R96	Resistor,SMT,MF,10.0Kohms,1%,1/10W,0603	RFFS50	RK73H1JLTD1002F	59124
R97	Resistor,SMT,MF,22.1ohms,1%,1/10W,0603	RFFS18	RK73H1JLTD22R1F	59124

Continued from previous page

NAPE78A/01 Digital AM Exciter PWB Assy

REFDES	DESCRIPTION	NAUTEL #	VENDOR #	OEM CODE
R98	Resistor,SMT,MF,10.0Kohms,1%,1/10W,0603	RFFS50	RK73H1JLTD1002F	59124
S01	Switch,SMt,Mom.,1PSTNO	SA60	KSC321G	ITT INDUS
T01	Transformer, SMT,4:1,0.03 to 125MHz	TZ93	ADT4-6T	
T02	Transformer,SMT,50 ohms,0.03to 125MHz	TZ88	ADT1-6T+(ROHS)	MINI-CIRC
T03	Transformer,SMT,50 ohms,0.03to 125MHz	TZ88	ADT1-6T+(ROHS)	MINI-CIRC
TP01	Terminal, SMT, Test Point, PWB	HAJ66	TP-107-02-1-T(RoHS) COMPONENTS CORP	
TP03	Terminal, SMT, Test Point, PWB	HAJ66	TP-107-02-1-T(RoHS) COMPONENTS CORP	
TP04	Terminal, SMT, Test Point, PWB	HAJ66	TP-107-02-1-T(RoHS) COMPONENTS CORP	
TP05	Terminal, SMT, Test Point, PWB	HAJ66	TP-107-02-1-T(RoHS) COMPONENTS CORP	
TP06	Terminal, SMT, Test Point, PWB	HAJ66	TP-107-02-1-T(RoHS) COMPONENTS CORP	
TP07	Terminal, SMT, Test Point, PWB	HAJ66	TP-107-02-1-T(RoHS) COMPONENTS CORP	
TP08	Terminal, SMT, Test Point, PWB	HAJ66	TP-107-02-1-T(RoHS) COMPONENTS CORP	
TP09	Terminal, SMT, Test Point, PWB	HAJ66	TP-107-02-1-T(RoHS) COMPONENTS CORP	
TP11	Terminal, SMT, Test Point, PWB	HAJ66	TP-107-02-1-T(RoHS) COMPONENTS CORP	
TP12	Terminal, SMT, Test Point, PWB	HAJ66	TP-107-02-1-T(RoHS) COMPONENTS CORP	
TP13	Terminal, SMT, Test Point, PWB	HAJ66	TP-107-02-1-T(RoHS) COMPONENTS CORP	
TP14	Terminal, SMT, Test Point, PWB	HAJ66	TP-107-02-1-T(RoHS) COMPONENTS CORP	
TP15	Terminal, SMT, Test Point, PWB	HAJ66	TP-107-02-1-T(RoHS) COMPONENTS CORP	
U01	IC,SMT,DAC,400MSPS,14 bitTQFP-48	UW86	DAC5674IPHPR(STATIC)(ROHS) TEXAS	TEXAS
U02	Oscillator,SMT,TCVCXO,10MHz,3.3V,2ppm	UT98	TC75-10M000-BV020A(STATIC)(ROHS)	4TIMING
U03	IC,SMT,DAC,16 Bit Serial,MSOP-8	UW64	DAC8531E(STATIC)	13919
U04	IC, SMT, Inverter, UHS, Dual,UnBFR, 6p SC70 1.2mm wide	UD80	NC7WZU04P6X(RoHS)	SCT30

Continued from previous page

NAPE78A/01 Digital AM Exciter PWB Assy

REFDES	DESCRIPTION	NAUTEL #	VENDOR #	OEM CODE
U05	IC,SMT,Linear Regulator,3A Adj,Q-5 DD	UX67	LT1764AEQ(STATIC)	64155
U06	IC,SMT,CMOS,Phase Locked Loop,SO-16	UDLS08	ADF4116BRUZ(static)	27014
U07	IC,SMT,Quad 2 TO 1 DATA Sel/Mux 3 States Output,3.3V	UW90	74LVC257APW(STATIC)(ROHS) NXP SEMICONDUCTOR	NXP SEMI
U08	IC,SMT,ADC,RF,14 bit,TQFP-64	UW94	ADS5542IPAP(STATIC)(ROHS)	TEXAS
U09	IC,SMT,3.3V Voltage Reference,SOT23-3	UX97	REF3033AIDBZT(STATIC)	13919
U10	IC,SMT,Linear Regulator,150mAAdj.,MSOP-8	UX66	LT1762EMS8(STATIC)	64155
U11	IC,SMT,ECL Clock Divider /2,SO-8	UX82	MC100EP32D(STATIC)	1MQ07
U12	IC,SMT,ADC,RF,14 bit,TQFP-64	UW94	ADS5542IPAP(STATIC)(ROHS)	TEXAS
U13	IC, SMT, Spartan3-1600 FPGA,FG320	UW115	XC3S1600E-5FG320C(STATIC)	68994
U14	IC,SMT,3A Sync Buck Converter,SO-20 w/pwr pad	UX65	TPS54310PWP(STATIC)	01295
U15	IC,SMT,ADC,Serial, 12 bit	UW89	ADC121S051CIMF(STATIC)(ROHS)	NATIONAL
U16	IC,SMT,Linear Regulator,3A Adj,Q-5 DD	UX67	LT1764AEQ(STATIC)	64155
U17	IC, SMT, SPI Flash, 16Mbit,SOIC8W	UW109	M25P16-VMW6G(STATIC)(RoHS)	
U18	IC,SMT,Quad 2 TO 1 DATA Sel/Mux 3 States Output,3.3V	UW90	74LVC257APW(STATIC)(ROHS) NXP SEMICONDUCTOR	NXP SEMI
U19	IC,SMT,RS-485 Transceiver,3.3V,SO-8	UDTS04	LTC1480IS8(STATIC)	64155
U20	IC,SMT,SRC,Async,2-ch,TQFP-48	UW80	SRC4382IPFBR(STATIC)(ROHS)	TEXAS
U21	IC,SMT,Linear Regulator,3A Adj,Q-5 DD	UX67	LT1764AEQ(STATIC)	64155
U22	IC,SMT,Power Supervisor,DualI/P,33/1.5V,MSOP	UX64	TPS3306-15DGK(STATIC)	01295
U23	IC,SMT,SRC,Async,2-ch,TQFP-48	UW80	SRC4382IPFBR(STATIC)(ROHS)	TEXAS
U24	Res,SMT Network,0402x8,39R	UW63	EXB2HV390J	54473
U25	IC,SMT,Blackfin DSP,500 MHzmBGA160	UW88	ADSP-BF533SBBC-5V(STATIC)	ANALOG
U26	Res,SMT Network,0402x8,39R	UW63	EXB2HV390J	54473
U27	IC, SDRAM, 128Mbit, x16, TSOP-II, Ext Temp	UX121	MT48LC8M16A2TG-7E IT:G(STATIC) Micron	
U28	Res,SMT Network,0402x8,39R	UW63	EXB2HV390J	54473
U29	IC,SMT,Differential LineReceivr, 100dB CMR	UD65	SSM2141S(STATIC)	LINEAR
U30	Res,SMT Network,0402x8,39R	UW63	EXB2HV390J	54473
U31	IC,SMT,Op Amp,Audio,Dual,SO-8	UP93	OP275GS(STATIC)	45496
U32	Res,SMT Network,0402x8,39R	UW63	EXB2HV390J	54473
U33	Res,SMT Network,0402x8,39R	UW63	EXB2HV390J	54473

Continued from previous page

NAPE78A/01 Digital AM Exciter PWB Assy

REFDES	DESCRIPTION	NAUTEL #	VENDOR #	OEM CODE
U34	IC,SMT,RS-232 Transceiver,3.3V,SO-16	UDTS05	ADM3202ARN(STATIC)	45496
U35	IC,SMT,Stereo ADC,24bit,96kHz,TSSOP-28	UP95	AD1871YRS(STATIC)	45496
U36	IC,SMT,SPI UART,3.3V	UW91	SC16IS740IPW(STATIC)(ROHS)	NXP
U37	IC,SMT,Voltage Regulator,5V,1A, D2PAK	UT93	L7805ABD2T-TR(STATIC)(ROHS)	ST MICRO
XE01	Conn, Header, SIP,12 Pin Breakaway,.10 Ctr	JQ16	1-103185-2	09482
Y01	Oscilitor, SMT, VCXO,158.76MHz LVPECL, 3.3V, 9x14mmx4	UT124	VCFRPE-158M760-BBA3Y(STATIC)(RoHS) 4TIMING	
Y02	Oscillator,SMT,25MHz,3.3V	UT100	S1613B-25.0000(STATIC)(ROHS)	SARONIX
Y03	Crystal,SMT,Fund,Par Res,3.6864MHz,Comm	XFPS03	ATSM49-3.6864MHz	23875

REFDES	DESCRIPTION	NAUTEL #	VENDOR #	OEM CODE
C01	Cap,SMT,Ceramic,1uF,10%,25V,,X7R,1206	CCFS10	C1206C105K3RAC	31433
CR01	Diode,SMT,Switching,250V,0.2A,SOD-323	QDRS01	BAS21HT1(STATIC)	04713
CR02	Diode,SMT,Switching,250V,0.2A,SOD-323	QDRS01	BAS21HT1(STATIC)	04713
CR03	Diode,SMT,Switching,250V,0.2A,SOD-323	QDRS01	BAS21HT1(STATIC)	04713
CR04	Diode,SMT,Switching,250V,0.2A,SOD-323	QDRS01	BAS21HT1(STATIC)	04713
CR05	Diode,SMT,Switching,250V,0.2A,SOD-323	QDRS01	BAS21HT1(STATIC)	04713
CR06	Diode,SMT,Switching,250V,0.2A,SOD-323	QDRS01	BAS21HT1(STATIC)	04713
CR07	Diode,SMT,Switching,250V,0.2A,SOD-323	QDRS01	BAS21HT1(STATIC)	04713
CR08	Diode,SMT,Switching,250V,0.2A,SOD-323	QDRS01	BAS21HT1(STATIC)	04713
CR09	Diode,SMT,Switching,250V,0.2A,SOD-323	QDRS01	BAS21HT1(STATIC)	04713
CR10	Diode,SMT,Switching,250V,0.2A,SOD-323	QDRS01	BAS21HT1(STATIC)	04713
CR11	Diode,SMT,Switching,250V,0.2A,SOD-323	QDRS01	BAS21HT1(STATIC)	04713
CR12	Diode,SMT,Switching,250V,0.2A,SOD-323	QDRS01	BAS21HT1(STATIC)	04713
CR13	Diode,SMT,Switching,250V,0.2A,SOD-323	QDRS01	BAS21HT1(STATIC)	04713
CR14	Diode,SMT,Switching,250V,0.2A,SOD-323	QDRS01	BAS21HT1(STATIC)	04713
CR15	Diode,SMT,Switching,250V,0.2A,SOD-323	QDRS01	BAS21HT1(STATIC)	04713
CR16	Diode,SMT,Switching,250V,0.2A,SOD-323	QDRS01	BAS21HT1(STATIC)	04713
DS01	Diode,SMT,LED,Bicolor,Red/Green,1210	QDLS04	597-7701-507(STATIC)	83330
DS02	Diode,SMT,LED,Bicolor,Red/Green,1210	QDLS04	597-7701-507(STATIC)	83330
DS03	Diode,SMT,LED,Bicolor,Red/Green,1210	QDLS04	597-7701-507(STATIC)	83330
DS04	Diode,SMT,LED,Bicolor,Red/Green,1210	QDLS04	597-7701-507(STATIC)	83330
DS05	Diode,SMT,LED,Bicolor,Red/Green,1210	QDLS04	597-7701-507(STATIC)	83330
DS06	Diode,SMT,LED,Bicolor,Red/Green,1210	QDLS04	597-7701-507(STATIC)	83330
DS07	Diode,SMT,LED,Bicolor,Red/Green,1210	QDLS04	597-7701-507(STATIC)	83330
DS08	Diode,SMT,LED,Bicolor,Red/Green,1210	QDLS04	597-7701-507(STATIC)	83330
DS09	Diode,SMT,LED,Bicolor,Red/Green,1210	QDLS04	597-7701-507(STATIC)	83330
DS10	Diode,SMT,LED,Bicolor,Red/Green,1210	QDLS04	597-7701-507(STATIC)	83330
DS11	Diode,SMT,LED,Bicolor,Red/Green,1210	QDLS04	597-7701-507(STATIC)	83330
DS12	Diode,SMT,LED,Bicolor,Red/Green,1210	QDLS04	597-7701-507(STATIC)	83330
DS13	Diode,SMT,LED,Bicolor,Red/Green,1210	QDLS04	597-7701-507(STATIC)	83330
DS14	Diode,SMT,LED,Bicolor,Red/Green,1210	QDLS04	597-7701-507(STATIC)	83330
DS15	Diode,SMT,LED,Bicolor,Red/Green,1210	QDLS04	597-7701-507(STATIC)	83330

Continued from previous page

NAPI106 Remote Interface PWB Assy

REFDES	DESCRIPTION	NAUTEL #	VENDOR #	OEM CODE
DS16	Diode,SMT,LED,Bicolor,Red/Green,1210	QDLS04	597-7701-507(STATIC)	83330
E01	Conn, Post Shunt, 2 Pos, .10 Centreline	JQ15	390088-2	09482
E02	Conn, Post Shunt, 2 Pos, .10 Centreline	JQ15	390088-2	09482
E03	Conn, Post Shunt, 2 Pos, .10 Centreline	JQ15	390088-2	09482
E04	Conn, Post Shunt, 2 Pos, .10 Centreline	JQ15	390088-2	09482
E05	Conn, Post Shunt, 2 Pos, .10 Centreline	JQ15	390088-2	09482
E06	Conn, Post Shunt, 2 Pos, .10 Centreline	JQ15	390088-2	09482
E07	Conn, Post Shunt, 2 Pos, .10 Centreline	JQ15	390088-2	09482
E08	Conn, Post Shunt, 2 Pos, .10 Centreline	JQ15	390088-2	09482
E09	Conn, Post Shunt, 2 Pos, .10 Centreline	JQ15	390088-2	09482
E10	Conn, Post Shunt, 2 Pos, .10 Centreline	JQ15	390088-2	09482
E11	Conn, Post Shunt, 2 Pos, .10 Centreline	JQ15	390088-2	09482
E12	Conn, Post Shunt, 2 Pos, .10 Centreline	JQ15	390088-2	09482
E13	Conn, Post Shunt, 2 Pos, .10 Centreline	JQ15	390088-2	09482
E14	Conn, Post Shunt, 2 Pos, .10 Centreline	JQ15	390088-2	09482
E15	Conn, Post Shunt, 2 Pos, .10 Centreline	JQ15	390088-2	09482
E16	Conn, Post Shunt, 2 Pos, .10 Centreline	JQ15	390088-2	09482
J01	Conn, Plug, D-Sub, 25 pin, PWB Mt	JS12	K22X-B25P-NJ	63590
J02	Conn, Socket, D-Sub, 25 pin, PWB Mt	JS13	K22-B25S-NJ	22421
J03	Terminal Block,8-pos,PWB Mount,90 Deg	JR53	1803332(ROHS)	PHOENIX
J04	Terminal Block,8-pos,PWB Mount,90 Deg	JR53	1803332(ROHS)	PHOENIX
J05	Terminal Block,8-pos,PWB Mount,90 Deg	JR53	1803332(ROHS)	PHOENIX
J06	Terminal Block,8-pos,PWB Mount,90 Deg	JR53	1803332(ROHS)	PHOENIX
J07	Terminal Block,8-pos,PWB Mount,90 Deg	JR53	1803332(ROHS)	PHOENIX
J08	Terminal Block,8-pos,PWB Mount,90 Deg	JR53	1803332(ROHS)	PHOENIX
J09	Terminal Block,8-pos,PWB Mount,90 Deg	JR53	1803332(ROHS)	PHOENIX
R01	Resistor, SMT, MF, 1500 Ohms,1% 1/4W	RAD27	RK73H2BL1501F	59124
R02	Resistor, SMT, MF, 1500 Ohms,1% 1/4W	RAD27	RK73H2BL1501F	59124
R03	Resistor, SMT, MF, 1500 Ohms,1% 1/4W	RAD27	RK73H2BL1501F	59124
R04	Resistor, SMT, MF, 1500 Ohms,1% 1/4W	RAD27	RK73H2BL1501F	59124
R05	Resistor, SMT, MF, 1500 Ohms,1% 1/4W	RAD27	RK73H2BL1501F	59124
R06	Resistor, SMT, MF, 1500 Ohms,1% 1/4W	RAD27	RK73H2BL1501F	59124
R07	Resistor, SMT, MF, 1500 Ohms,1% 1/4W	RAD27	RK73H2BL1501F	59124
R08	Resistor, SMT, MF, 1500 Ohms,1% 1/4W	RAD27	RK73H2BL1501F	59124
R09	Resistor, SMT, MF, 1500 Ohms,1% 1/4W	RAD27	RK73H2BL1501F	59124
R10	Resistor, SMT, MF, 1500 Ohms,1% 1/4W	RAD27	RK73H2BL1501F	59124
R11	Resistor, SMT, MF, 1500 Ohms,1% 1/4W	RAD27	RK73H2BL1501F	59124
R12	Resistor, SMT, MF, 1500 Ohms,1% 1/4W	RAD27	RK73H2BL1501F	59124
R13	Resistor, SMT, MF, 1500 Ohms,1% 1/4W	RAD27	RK73H2BL1501F	59124

Continued from previous page

NAPI106 Remote Interface PWB Assy

REFDES	DESCRIPTION	NAUTEL #	VENDOR #	OEM CODE
R14	Resistor, SMT, MF, 1500 Ohms,1% 1/4W	RAD27	RK73H2BL1501F	59124
R15	Resistor, SMT, MF, 1500 Ohms,1% 1/4W	RAD27	RK73H2BL1501F	59124
R16	Resistor, SMT, MF, 1500 Ohms,1% 1/4W	RAD27	RK73H2BL1501F	59124
S01	Switch,SMt,Mom.,1PSTNO	SA60	KSC321G	ITT INDUS
S02	Switch,SMt,Mom.,1PSTNO	SA60	KSC321G	ITT INDUS
S03	Switch,SMt,Mom.,1PSTNO	SA60	KSC321G	ITT INDUS
S04	Switch,SMt,Mom.,1PSTNO	SA60	KSC321G	ITT INDUS
S05	Switch,SMt,Mom.,1PSTNO	SA60	KSC321G	ITT INDUS
S06	Switch,SMt,Mom.,1PSTNO	SA60	KSC321G	ITT INDUS
S07	Switch,SMt,Mom.,1PSTNO	SA60	KSC321G	ITT INDUS
S08	Switch,SMt,Mom.,1PSTNO	SA60	KSC321G	ITT INDUS
S09	Switch,SMt,Mom.,1PSTNO	SA60	KSC321G	ITT INDUS
S10	Switch,SMt,Mom.,1PSTNO	SA60	KSC321G	ITT INDUS
S11	Switch,SMt,Mom.,1PSTNO	SA60	KSC321G	ITT INDUS
S12	Switch,SMt,Mom.,1PSTNO	SA60	KSC321G	ITT INDUS
S13	Switch,SMt,Mom.,1PSTNO	SA60	KSC321G	ITT INDUS
S14	Switch,SMt,Mom.,1PSTNO	SA60	KSC321G	ITT INDUS
S15	Switch,SMt,Mom.,1PSTNO	SA60	KSC321G	ITT INDUS
S16	Switch,SMt,Mom.,1PSTNO	SA60	KSC321G	ITT INDUS
XE01	Conn, Header, SIP,12 Pin Breakaway,.10 Ctr	JQ16	1-103185-2	09482
XE02	Conn, Header, SIP,12 Pin Breakaway,.10 Ctr	JQ16	1-103185-2	09482
XE03	Conn, Header, SIP,12 Pin Breakaway,.10 Ctr	JQ16	1-103185-2	09482
XE04	Conn, Header, SIP,12 Pin Breakaway,.10 Ctr	JQ16	1-103185-2	09482
XE05	Conn, Header, SIP,12 Pin Breakaway,.10 Ctr	JQ16	1-103185-2	09482
XE06	Conn, Header, SIP,12 Pin Breakaway,.10 Ctr	JQ16	1-103185-2	09482
XE07	Conn, Header, SIP,12 Pin Breakaway,.10 Ctr	JQ16	1-103185-2	09482
XE08	Conn, Header, SIP,12 Pin Breakaway,.10 Ctr	JQ16	1-103185-2	09482
XE09	Conn, Header, SIP,12 Pin Breakaway,.10 Ctr	JQ16	1-103185-2	09482
XE10	Conn, Header, SIP,12 Pin Breakaway,.10 Ctr	JQ16	1-103185-2	09482
XE11	Conn, Header, SIP,12 Pin Breakaway,.10 Ctr	JQ16	1-103185-2	09482
XE12	Conn, Header, SIP,12 Pin Breakaway,.10 Ctr	JQ16	1-103185-2	09482
XE13	Conn, Header, SIP,12 Pin Breakaway,.10 Ctr	JQ16	1-103185-2	09482
XE14	Conn, Header, SIP,12 Pin Breakaway,.10 Ctr	JQ16	1-103185-2	09482
XE15	Conn, Header, SIP,12 Pin Breakaway,.10 Ctr	JQ16	1-103185-2	09482
XE16	Conn, Header, SIP,12 Pin Breakaway,.10 Ctr	JQ16	1-103185-2	09482

REFDES	DESCRIPTION	NAUTEL #	VENDOR #	OEM CODE
C001	Cap, SMT, Ceramic, 0.1uF, 10%25V X7R, 0603	CCFS52	C0603C104K3RAC	31433
C002	Cap,SMT,Ceramic,1uF,10%,100V,X7R,1210	CCFS60	12101C105KAT2A(ROHS)	AVX CORP
C003	Cap,SMT,Ceramic,0.001uF,10%,50V,X7R,0603	CCFS01	C0603C102K5RAC	31433
C004	Cap,SMT,Ceramic,1uF,10%,100V,X7R,1210	CCFS60	12101C105KAT2A(ROHS)	AVX CORP
C005	Cap, SMT, Ceramic, 0.1uF, 10%25V X7R, 0603	CCFS52	C0603C104K3RAC	31433
C006	Cap,SMT,Ceramic,1uF,10%,100V,X7R,1210	CCFS60	12101C105KAT2A(ROHS)	AVX CORP
C007	Cap,SMT,Tantalum,47uF,10%,16V,2917	CTFS05	T494D476K016AS	31433
C008	Capacitor, Elect, 33uF, 63V,+/-20%	CBP16	KME63VB33RM6X11LL	UNITED
C009	Cap, SMT, Ceramic, 0.1uF, 10%25V X7R, 0603	CCFS52	C0603C104K3RAC	31433
C010	Capacitor, Elect, 1000uF 50V	CT41	SME50VB102M16X25LL	1W344
C011	Cap, SMT, Ceramic, 0.1uF, 10%25V X7R, 0603	CCFS52	C0603C104K3RAC	31433
C012	Cap,SMT,Ceramic,1uF,10%,100V,X7R,1210	CCFS60	12101C105KAT2A(ROHS)	AVX CORP
C013	Cap,SMT,Ceramic,18pF,2%,50V,C0G,0603	CCFS23	C0603C180G5GAC	31433
C014	Cap, SMT, Ceramic, 0.1uF, 10%25V X7R, 0603	CCFS52	C0603C104K3RAC	31433
C015	Cap, SMT, Ceramic, 0.1uF, 10%25V X7R, 0603	CCFS52	C0603C104K3RAC	31433
C016	Cap,SMT,Ceramic,0.022uF,10%,50V,X7R,0603	CCFS05	C0603C223K5RAC	31433
C017	Cap, SMT, Ceramic, 0.1uF, 10%25V X7R, 0603	CCFS52	C0603C104K3RAC	31433
C018	Cap,SMT,Ceramic,18pF,2%,50V,C0G,0603	CCFS23	C0603C180G5GAC	31433
C019	Not Used	-	NOT USED	37338
C020	Not Used	-	NOT USED	37338
C021	Not Used	-	NOT USED	37338
C022	Cap,SMT,Tantalum,10uF,10%,35V,2917	CTFS03	T494D106K035AS	31433
C023	Cap, SMT, Ceramic, 0.1uF, 10%25V X7R, 0603	CCFS52	C0603C104K3RAC	31433
C024	Cap,SMT,Ceramic,0.022uF,10%,50V,X7R,0603	CCFS05	C0603C223K5RAC	31433
C025	Cap, SMT, Ceramic, 0.1uF, 10%25V X7R, 0603	CCFS52	C0603C104K3RAC	31433
C026	Cap, SMT, Ceramic, 0.1uF, 10%25V X7R, 0603	CCFS52	C0603C104K3RAC	31433
C027	Cap, SMT, Ceramic, 0.1uF, 10%25V X7R, 0603	CCFS52	C0603C104K3RAC	31433
C028	Cap, SMT, Ceramic, 0.1uF, 10%25V X7R, 0603	CCFS52	C0603C104K3RAC	31433
C029	Cap, SMT, Ceramic, 0.1uF, 10%25V X7R, 0603	CCFS52	C0603C104K3RAC	31433
C030	Cap, SMT, Ceramic, 0.1uF, 10%25V X7R, 0603	CCFS52	C0603C104K3RAC	31433
C031	Cap, SMT, Ceramic, 0.1uF, 10%25V X7R, 0603	CCFS52	C0603C104K3RAC	31433
C032	Cap, SMT, Ceramic, 0.1uF, 10%25V X7R, 0603	CCFS52	C0603C104K3RAC	31433
C033	Cap, SMT, Ceramic, 0.1uF, 10%25V X7R, 0603	CCFS52	C0603C104K3RAC	31433
C034	Cap,SMT,Ceramic,0.1uF,10%,50V,X7R,0805	CCFS07	C0805C104K5RAC	31433
C035	Cap,SMT,Ceramic,1uF,10%,100V,X7R,1210	CCFS60	12101C105KAT2A(ROHS)	AVX CORP
C036	Cap,SMT,Tantalum,10uF,10%,35V,2917	CTFS03	T494D106K035AS	31433

Continued from previous page

REFDES	DESCRIPTION	NAUTEL #	VENDOR #	OEM CODE
C037	Cap,SMT,Tantalum,10uF,10%,35V,2917	CTFS03	T494D106K035AS	31433
C038	Cap, SMT, Ceramic, 0.1uF, 10%25V X7R, 0603	CCFS52	C0603C104K3RAC	31433
C039	Cap, SMT, Ceramic, 0.1uF, 10%25V X7R, 0603	CCFS52	C0603C104K3RAC	31433
C040	Not Used	-	NOT USED	37338
C041	Cap, SMT, Ceramic, 0.1uF, 10%25V X7R, 0603	CCFS52	C0603C104K3RAC	31433
C042	Cap,SMT,Ceramic,0.01uF,10%,50V,X7R,0603	CCFS04	C0603C103K5RAC	31433
C043	Cap, SMT, Ceramic, 0.1uF, 10%25V X7R, 0603	CCFS52	C0603C104K3RAC	31433
C044	Cap, SMT, Ceramic, 0.1uF, 10%25V X7R, 0603	CCFS52	C0603C104K3RAC	31433
C045	Cap,SMT,Ceramic,0.01uF,10%,50V,X7R,0603	CCFS04	C0603C103K5RAC	31433
C046	Cap, SMT, Ceramic, 0.1uF, 10%25V X7R, 0603	CCFS52	C0603C104K3RAC	31433
C047	Cap,SMT,Tantalum,10uF,10%,35V,2917	CTFS03	T494D106K035AS	31433
C048	Cap, SMT, Ceramic, 0.1uF, 10%25V X7R, 0603	CCFS52	C0603C104K3RAC	31433
C049	Not Used	-	NOT USED	37338
C050	Not Used	-	NOT USED	37338
C051	Cap,SMT,Ceramic,1uF,10%,100V,X7R,1210	CCFS60	12101C105KAT2A(ROHS)	AVX CORP
C052	Cap,SMT,Tantalum,10uF,10%,35V,2917	CTFS03	T494D106K035AS	31433
C053	Cap,SMT,Ceramic,0.01uF,10%,50V,X7R,0603	CCFS04	C0603C103K5RAC	31433
C054	Cap, SMT, Ceramic, 0.1uF, 10%25V X7R, 0603	CCFS52	C0603C104K3RAC	31433
C055	Cap, SMT, Ceramic, 0.1uF, 10%25V X7R, 0603	CCFS52	C0603C104K3RAC	31433
C056	Cap,SMT,Ceramic,0.1uF,10%,50V,X7R,0805	CCFS07	C0805C104K5RAC	31433
C057	Cap,SMT,Ceramic,0.01uF,10%,50V,X7R,0603	CCFS04	C0603C103K5RAC	31433
C058	Cap, SMT, Ceramic, 0.1uF, 10%25V X7R, 0603	CCFS52	C0603C104K3RAC	31433
C059	Cap, SMT, Ceramic, 0.1uF, 10%25V X7R, 0603	CCFS52	C0603C104K3RAC	31433
C060	Cap, SMT, Ceramic, 0.1uF, 10%25V X7R, 0603	CCFS52	C0603C104K3RAC	31433
C061	Cap, SMT, Ceramic, 0.1uF, 10%25V X7R, 0603	CCFS52	C0603C104K3RAC	31433
C062	Cap,SMT,Ceramic,1uF,10%,100V,X7R,1210	CCFS60	12101C105KAT2A(ROHS)	AVX CORP
C063	Cap, SMT, Ceramic, 0.1uF, 10%25V X7R, 0603	CCFS52	C0603C104K3RAC	31433
C064	Cap, SMT, Ceramic, 0.1uF, 10%25V X7R, 0603	CCFS52	C0603C104K3RAC	31433
C065	Cap,SMT,Tantalum,10uF,10%,35V,2917	CTFS03	T494D106K035AS	31433
C066	Cap, SMT, Ceramic, 0.1uF, 10%25V X7R, 0603	CCFS52	C0603C104K3RAC	31433
C067	Cap,SMT,Ceramic,0.01uF,10%,50V,X7R,0603	CCFS04	C0603C103K5RAC	31433
C068	Cap,SMT,Ceramic,0.01uF,10%,50V,X7R,0603	CCFS04	C0603C103K5RAC	31433
C069	Cap, SMT, Ceramic, 0.1uF, 10%25V X7R, 0603	CCFS52	C0603C104K3RAC	31433
C070	Cap,SMT,Ceramic,1uF,10%,100V,X7R,1210	CCFS60	12101C105KAT2A(ROHS)	AVX CORP
C071	Cap,SMT,Ceramic,1uF,10%,100V,X7R,1210	CCFS60	12101C105KAT2A(ROHS)	AVX CORP
C072	Cap, SMT, Ceramic, 0.1uF, 10%25V X7R, 0603	CCFS52	C0603C104K3RAC	31433
C073	Cap, SMT, Ceramic, 0.1uF, 10%25V X7R, 0603	CCFS52	C0603C104K3RAC	31433

Continued from previous page

REFDES	DESCRIPTION	NAUTEL #	VENDOR #	OEM CODE
C074	Cap, SMT, Ceramic, 0.1uF, 10%25V X7R, 0603	CCFS52	C0603C104K3RAC	31433
C075	Cap,SMT,Ceramic,1uF,10%,100V,X7R,1210	CCFS60	12101C105KAT2A(ROHS)	AVX CORP
C076	Cap, SMT, Ceramic, 0.1uF, 10%25V X7R, 0603	CCFS52	C0603C104K3RAC	31433
C077	Cap,SMT,Ceramic,0.01uF,10%,50V,X7R,0603	CCFS04	C0603C103K5RAC	31433
C078	Cap, SMT, Ceramic, 0.1uF, 10%25V X7R, 0603	CCFS52	C0603C104K3RAC	31433
C079	Cap,SMT,Ceramic,1uF,10%,100V,X7R,1210	CCFS60	12101C105KAT2A(ROHS)	AVX CORP
C080	Cap,SMT,Tantalum,10uF,10%,35V,2917	CTFS03	T494D106K035AS	31433
C081	Cap,SMT,Ceramic,0.01uF,10%,50V,X7R,0603	CCFS04	C0603C103K5RAC	31433
C082	Cap,SMT,Ceramic,0.047uF,10%,50V,X7R,0603	CCFS06	C0603C473K5RAC	31433
C083	Cap, SMT, Ceramic, 0.1uF, 10%25V X7R, 0603	CCFS52	C0603C104K3RAC	31433
C084	Cap,SMT,Ceramic,0.01uF,10%,50V,X7R,0603	CCFS04	C0603C103K5RAC	31433
C085	Cap, SMT, Ceramic, 0.1uF, 10%25V X7R, 0603	CCFS52	C0603C104K3RAC	31433
C086	Cap, SMT, Ceramic, 0.1uF, 10%25V X7R, 0603	CCFS52	C0603C104K3RAC	31433
C087	Cap,SMT,Ceramic,1uF,10%,100V,X7R,1210	CCFS60	12101C105KAT2A(ROHS)	AVX CORP
C088	Cap, SMT, Ceramic, 0.1uF, 10%25V X7R, 0603	CCFS52	C0603C104K3RAC	31433
C089	Cap,SMT,Ceramic,0.001uF,10%,50V,X7R,0603	CCFS01	C0603C102K5RAC	31433
C090	Cap,SMT,Ceramic,1uF,10%,100V,X7R,1210	CCFS60	12101C105KAT2A(ROHS)	AVX CORP
C091	Cap, SMT, Ceramic, 0.1uF, 10%25V X7R, 0603	CCFS52	C0603C104K3RAC	31433
C092	Cap, SMT, Ceramic, 0.1uF, 10%25V X7R, 0603	CCFS52	C0603C104K3RAC	31433
C093	Cap,SMT,Ceramic,0.001uF,10%,50V,X7R,0603	CCFS01	C0603C102K5RAC	31433
C094	Cap,SMT,Ceramic,1uF,10%,100V,X7R,1210	CCFS60	12101C105KAT2A(ROHS)	AVX CORP
C095	Cap,SMT,Tantalum,10uF,10%,35V,2917	CTFS03	T494D106K035AS	31433
C096	Cap, SMT, Ceramic, 0.1uF, 10%25V X7R, 0603	CCFS52	C0603C104K3RAC	31433
C097	Cap,SMT,Ceramic,0.001uF,10%,50V,X7R,0603	CCFS01	C0603C102K5RAC	31433
C098	Cap, SMT, Ceramic, 0.1uF, 10%25V X7R, 0603	CCFS52	C0603C104K3RAC	31433
C099	Cap, SMT, Ceramic, 0.1uF, 10%25V X7R, 0603	CCFS52	C0603C104K3RAC	31433
C100	Cap, SMT, Ceramic, 0.1uF, 10%25V X7R, 0603	CCFS52	C0603C104K3RAC	31433
C101	Cap, SMT, Ceramic, 0.1uF, 10%25V X7R, 0603	CCFS52	C0603C104K3RAC	31433
C102	Cap, SMT, Ceramic, 0.1uF, 10%25V X7R, 0603	CCFS52	C0603C104K3RAC	31433
C103	Cap, SMT, Ceramic, 0.1uF, 10%25V X7R, 0603	CCFS52	C0603C104K3RAC	31433
C104	Cap, SMT, Ceramic, 0.1uF, 10%25V X7R, 0603	CCFS52	C0603C104K3RAC	31433
C105	Cap,SMT,Ceramic,1uF,10%,100V,X7R,1210	CCFS60	12101C105KAT2A(ROHS)	AVX CORP
C106	Cap,SMT,Ceramic,0.01uF,10%,50V,X7R,0603	CCFS04	C0603C103K5RAC	31433
C107	Cap,SMT,Ceramic,0.001uF,10%,50V,X7R,0603	CCFS01	C0603C102K5RAC	31433
C108	Cap, SMT, Ceramic, 0.1uF, 10%25V X7R, 0603	CCFS52	C0603C104K3RAC	31433
C109	Cap, SMT, Ceramic, 0.1uF, 10%25V X7R, 0603	CCFS52	C0603C104K3RAC	31433

Continued from previous page

REFDES	DESCRIPTION	NAUTEL #	VENDOR #	OEM CODE
C110	Cap, SMT, Ceramic, 0.1uF, 10%25V X7R, 0603	CCFS52	C0603C104K3RAC	31433
C111	Cap, SMT, Ceramic, 0.1uF, 10%25V X7R, 0603	CCFS52	C0603C104K3RAC	31433
C112	Cap, SMT, Ceramic, 0.1uF, 10%25V X7R, 0603	CCFS52	C0603C104K3RAC	31433
C113	Cap,SMT,Ceramic,1uF,10%,100V,X7R,1210	CCFS60	12101C105KAT2A(RO HS)	AVX CORP
C114	Cap, SMT, Ceramic, 0.1uF, 10%25V X7R, 0603	CCFS52	C0603C104K3RAC	31433
C115	Cap, SMT, Ceramic, 0.1uF, 10%25V X7R, 0603	CCFS52	C0603C104K3RAC	31433
C116	Cap, SMT, Ceramic, 0.1uF, 10%25V X7R, 0603	CCFS52	C0603C104K3RAC	31433
C117	Cap, SMT, Ceramic, 0.1uF, 10%25V X7R, 0603	CCFS52	C0603C104K3RAC	31433
C118	Cap,SMT,Tantalum,10uF,10%,35V,2917	CTFS03	T494D106K035AS	31433
C119	Cap, SMT, Ceramic, 0.1uF, 10%25V X7R, 0603	CCFS52	C0603C104K3RAC	31433
C120	Cap, SMT, Ceramic, 0.1uF, 10%25V X7R, 0603	CCFS52	C0603C104K3RAC	31433
C121	Cap,SMT,Ceramic,1uF,10%,100V,X7R,1210	CCFS60	12101C105KAT2A(RO HS)	AVX CORP
C122	Cap,SMT,Ceramic,1uF,10%,100V,X7R,1210	CCFS60	12101C105KAT2A(RO HS)	AVX CORP
C123	Cap, SMT, Ceramic, 0.1uF, 10%25V X7R, 0603	CCFS52	C0603C104K3RAC	31433
C124	Cap,SMT,Tantalum,10uF,10%,35V,2917	CTFS03	T494D106K035AS	31433
C125	Cap, SMT, Ceramic, 0.1uF, 10%25V X7R, 0603	CCFS52	C0603C104K3RAC	31433
C126	Cap,SMT,Ceramic,0.01uF,10%,50V,X7R,0603	CCFS04	C0603C103K5RAC	31433
C127	Capacitor,Elect,SnapMt,22000uF+/-20% 80V	CJ24	380LX223M080A102	CORNELL
C128	Cap,SMT,Ceramic,1uF,10%,100V,X7R,1210	CCFS60	12101C105KAT2A(RO HS)	AVX CORP
C129	Cap, SMT, Ceramic, 0.1uF, 10%25V X7R, 0603	CCFS52	C0603C104K3RAC	31433
C130	Cap, SMT, Ceramic, 0.1uF, 10%25V X7R, 0603	CCFS52	C0603C104K3RAC	31433
C131	Cap,SMT,Ceramic,0.01uF,10%,50V,X7R,0603	CCFS04	C0603C103K5RAC	31433
C132	Capacitor, Elect, 1000uF 50V	CT41	SME50VB102M16X25 LL	1W344
C133	Cap,SMT,Ceramic,0.001uF,10%,50V,X7R,0603	CCFS01	C0603C102K5RAC	31433
C134	Cap,SMT,Ceramic,0.001uF,10%,50V,X7R,0603	CCFS01	C0603C102K5RAC	31433
C135	Cap, SMT, Ceramic, 0.1uF, 10%25V X7R, 0603	CCFS52	C0603C104K3RAC	31433
C136	Cap, SMT, Ceramic, 0.1uF, 10%25V X7R, 0603	CCFS52	C0603C104K3RAC	31433
C137	Cap, SMT, Ceramic, 0.1uF, 10%25V X7R, 0603	CCFS52	C0603C104K3RAC	31433
C138	Not Used	-	NOT USED	37338
C139	Not Used	-	NOT USED	37338
C140	Not Used	-	NOT USED	37338
C141	Not Used	-	NOT USED	37338
C142	Cap,SMT,Ceramic,0.047uF,10%,50V,X7R,0603	CCFS06	C0603C473K5RAC	31433
C143	Cap, SMT, Ceramic, 0.1uF, 10%25V X7R, 0603	CCFS52	C0603C104K3RAC	31433
C144	Cap, SMT, Ceramic, 0.1uF, 10%25V X7R, 0603	CCFS52	C0603C104K3RAC	31433
C145	Capacitor, SMT, Tantalum, 47uF 10%, 25V	CX36	TR3D476K025C0100(RoHS) VISHAY	

Continued from previous page

REFDES	DESCRIPTION	NAUTEL #	VENDOR #	OEM CODE
C146	Cap,SMT,Tantalum,10uF,10%,35V,2917	CTFS03	T494D106K035AS	31433
C147	Cap, SMT, Ceramic, 0.1uF, 10%25V X7R, 0603	CCFS52	C0603C104K3RAC	31433
C148	Cap, SMT, Ceramic, 0.1uF, 10%25V X7R, 0603	CCFS52	C0603C104K3RAC	31433
C149	Cap, SMT, Ceramic, 0.1uF, 10%25V X7R, 0603	CCFS52	C0603C104K3RAC	31433
C150	Cap, SMT, Ceramic, 0.1uF, 10%25V X7R, 0603	CCFS52	C0603C104K3RAC	31433
C151	Cap, SMT, Ceramic, 0.1uF, 10%25V X7R, 0603	CCFS52	C0603C104K3RAC	31433
C152	Cap, SMT, Ceramic, 0.1uF, 10%25V X7R, 0603	CCFS52	C0603C104K3RAC	31433
C153	Cap, SMT, Ceramic, 0.1uF, 10%25V X7R, 0603	CCFS52	C0603C104K3RAC	31433
C154	Cap, SMT, Ceramic, 0.1uF, 10%25V X7R, 0603	CCFS52	C0603C104K3RAC	31433
C155	Cap, SMT, Ceramic, 0.1uF, 10%25V X7R, 0603	CCFS52	C0603C104K3RAC	31433
C156	Cap, SMT, Ceramic, 0.1uF, 10%25V X7R, 0603	CCFS52	C0603C104K3RAC	31433
C157	Cap, SMT, Ceramic, 0.1uF, 10%25V X7R, 0603	CCFS52	C0603C104K3RAC	31433
C158	Cap, SMT, Ceramic, 0.1uF, 10%25V X7R, 0603	CCFS52	C0603C104K3RAC	31433
C159	Cap,SMT,Ceramic,0.022uF,10%,50V,X7R,0603	CCFS05	C0603C223K5RAC	31433
C160	Cap,SMT,Ceramic,0.022uF,10%,50V,X7R,0603	CCFS05	C0603C223K5RAC	31433
C161	Cap, SMT, Ceramic, 0.1uF, 10%25V X7R, 0603	CCFS52	C0603C104K3RAC	31433
C162	Cap, SMT, Ceramic, 0.1uF, 10%25V X7R, 0603	CCFS52	C0603C104K3RAC	31433
C163	Cap, SMT, Ceramic, 0.1uF, 10%25V X7R, 0603	CCFS52	C0603C104K3RAC	31433
C164	Cap, SMT, Ceramic, 0.1uF, 10%25V X7R, 0603	CCFS52	C0603C104K3RAC	31433
C165	Cap, SMT, Ceramic, 0.1uF, 10%25V X7R, 0603	CCFS52	C0603C104K3RAC	31433
C166	Cap, SMT, Ceramic, 0.1uF, 10%25V X7R, 0603	CCFS52	C0603C104K3RAC	31433
C167	Cap, SMT, Ceramic, 0.1uF, 10%25V X7R, 0603	CCFS52	C0603C104K3RAC	31433
C168	Cap, SMT, Ceramic, 0.1uF, 10%25V X7R, 0603	CCFS52	C0603C104K3RAC	31433
C169	Cap, SMT, Ceramic, 0.1uF, 10%25V X7R, 0603	CCFS52	C0603C104K3RAC	31433
C170	Cap, SMT, Ceramic, 0.1uF, 10%25V X7R, 0603	CCFS52	C0603C104K3RAC	31433
C171	Cap, SMT, Ceramic, 0.1uF, 10%25V X7R, 0603	CCFS52	C0603C104K3RAC	31433
C172	Cap, SMT, Ceramic, 0.1uF, 10%25V X7R, 0603	CCFS52	C0603C104K3RAC	31433
C173	Cap,SMT,Ceramic,0.47uF,10%,25V,X7R,0805	CCFS09	C0805C474K3RAC	31433
C174	Cap,SMT,Ceramic,0.47uF,10%,25V,X7R,0805	CCFS09	C0805C474K3RAC	31433
C175	Cap,SMT,Ceramic,0.47uF,10%,25V,X7R,0805	CCFS09	C0805C474K3RAC	31433
C176	Cap,SMT,Ceramic,1uF,10%,100V,X7R,1210	CCFS60	12101C105KAT2A(ROHS)	AVX CORP
C177	Cap, SMT, Ceramic, 0.1uF, 10%25V X7R, 0603	CCFS52	C0603C104K3RAC	31433
C178	Cap,SMT,Tantalum,47uF,10%,16V,2917	CTFS05	T494D476K016AS	31433
C179	Cap, SMT, Ceramic, 0.1uF, 10%25V X7R, 0603	CCFS52	C0603C104K3RAC	31433
C180	Capacitor, SMT, Tantalum, 47uF 10%, 25V	CX36	TR3D476K025C0100(RoHS) VISHAY	
C181	Cap, SMT, Ceramic, 0.1uF, 10%25V X7R, 0603	CCFS52	C0603C104K3RAC	31433
C182	Cap,SMT,Ceramic,0.47uF,10%,25V,X7R,0805	CCFS09	C0805C474K3RAC	31433
C183	Cap,SMT,Ceramic,0.47uF,10%,25V,X7R,0805	CCFS09	C0805C474K3RAC	31433

Continued from previous page

REFDES	DESCRIPTION	NAUTEL #	VENDOR #	OEM CODE
C184	Cap,SMT,Ceramic,0.47uF,10%,25V,X7R,0805	CCFS09	C0805C474K3RAC	31433
C185	Cap,SMT,Ceramic,0.047uF,10%,50V,X7R,0603	CCFS06	C0603C473K5RAC	31433
C186	Not Used	-	NOT USED	37338
C187	Not Used	-	NOT USED	37338
C188	Not Used	-	NOT USED	37338
C189	Not Used	-	NOT USED	37338
C190	Cap,SMT,Ceramic,0.047uF,10%,50V,X7R,0603	CCFS06	C0603C473K5RAC	31433
C191	Cap,SMT,Ceramic,0.047uF,10%,50V,X7R,0603	CCFS06	C0603C473K5RAC	31433
C192	Not Used	-	NOT USED	37338
C193	Cap, SMT, Ceramic, 0.1uF, 10%25V X7R, 0603	CCFS52	C0603C104K3RAC	31433
C194	Cap,SMT,Ceramic,1uF,10%,100V,X7R,1210	CCFS60	12101C105KAT2A(ROHS)	AVX CORP
C195	Cap,SMT,Ceramic,1uF,10%,100V,X7R,1210	CCFS60	12101C105KAT2A(ROHS)	AVX CORP
C196	Cap, SMT, Ceramic, 0.1uF, 10%25V X7R, 0603	CCFS52	C0603C104K3RAC	31433
C197	Not Used	-	NOT USED	37338
C198	Not Used	-	NOT USED	37338
C199	Not Used	-	NOT USED	37338
C200	Cap,SMT,Ceramic,0.047uF,10%,50V,X7R,0603	CCFS06	C0603C473K5RAC	31433
C201	Cap,SMT,Ceramic,0.047uF,10%,50V,X7R,0603	CCFS06	C0603C473K5RAC	31433
C202	Not Used	-	NOT USED	37338
C203	Cap, SMT, Ceramic, 0.1uF, 10%25V X7R, 0603	CCFS52	C0603C104K3RAC	31433
C204	Cap,SMT,Ceramic,1uF,10%,100V,X7R,1210	CCFS60	12101C105KAT2A(ROHS)	AVX CORP
C205	Not Used	-	NOT USED	37338
C206	Not Used	-	NOT USED	37338
C207	Not Used	-	NOT USED	37338
C208	Not Used	-	NOT USED	37338
C209	Cap,SMT,Ceramic,0.047uF,10%,50V,X7R,0603	CCFS06	C0603C473K5RAC	31433
C210	Cap,SMT,Ceramic,1uF,10%,100V,X7R,1210	CCFS60	12101C105KAT2A(ROHS)	AVX CORP
C211	Cap, SMT, Ceramic, 0.1uF, 10%25V X7R, 0603	CCFS52	C0603C104K3RAC	31433
C212	Cap,SMT,Ceramic,0.047uF,10%,50V,X7R,0603	CCFS06	C0603C473K5RAC	31433
C213	Cap,SMT,Ceramic,1uF,10%,100V,X7R,1210	CCFS60	12101C105KAT2A(ROHS)	AVX CORP
C214	Cap,SMT,Ceramic,0.047uF,10%,50V,X7R,0603	CCFS06	C0603C473K5RAC	31433
C215	Cap, SMT, Ceramic, 0.1uF, 10%25V X7R, 0603	CCFS52	C0603C104K3RAC	31433
C216	Cap,SMT,Ceramic,0.047uF,10%,50V,X7R,0603	CCFS06	C0603C473K5RAC	31433
C217	Not Used	-	NOT USED	37338
C218	Not Used	-	NOT USED	37338
C219	Not Used	-	NOT USED	37338
C220	Not Used	-	NOT USED	37338

Continued from previous page

NAPI152A Rack Interface PWB Assy

REFDES	DESCRIPTION	NAUTEL #	VENDOR #	OEM CODE
CR01	Diode,SMT,Switching,250V,0.2A,SOD-323	QDRS01	BAS21HT1(STATIC)	04713
CR02	Diode,SMT,Switching,250V,0.2A,SOD-323	QDRS01	BAS21HT1(STATIC)	04713
CR03	Diode, Schottky Rectifier, 60V, 16A	QM60	MBR1660 (RoHS)	
CR04	Diode, Schottky Rectifier, 60V, 16A	QM60	MBR1660 (RoHS)	
CR05	Diode,SMT,Schottky,30V,0.2A,SOD-323	QDSS01	BAT54HT1(STATIC)	04713
CR06	Diode, Schottky Rectifier, 60V, 16A	QM60	MBR1660 (RoHS)	
CR07	Diode, Schottky Rectifier, 60V, 16A	QM60	MBR1660 (RoHS)	
CR08	Diode,SMT,Schottky,30V,0.2A,SOD-323	QDSS01	BAT54HT1(STATIC)	04713
CR09	Not Used	-	NOT USED	37338
CR10	Not Used	-	NOT USED	37338
CR11	Not Used	-	NOT USED	37338
CR12	Not Used	-	NOT USED	37338
CR13	Not Used	-	NOT USED	37338
CR14	Diode,SMT,Zener,39V,5%,3W,SMB	QDZS04	1SMB5939BT3	04713
CR15	Diode, Schottky Rectifier, 60V, 16A	QM60	MBR1660 (RoHS)	
CR16	Diode, Schottky Rectifier, 60V, 16A	QM60	MBR1660 (RoHS)	
CR17	Diode, Schottky Rectifier, 60V, 16A	QM60	MBR1660 (RoHS)	
CR18	Not Used	-	NOT USED	37338
CR19	Not Used	-	NOT USED	37338
CR20	Not Used	-	NOT USED	37338
CR21	Not Used	-	NOT USED	37338
CR22	Diode, Zener, 6.2V, 1.5W, 2%	QN22	1N5920C(STATIC)	04713
CR23	Diode, Zener, 6.2V, 1.5W, 2%	QN22	1N5920C(STATIC)	04713
CR24	Not Used	-	NOT USED	37338
CR25	Diode,SMT,Schottky,30V,0.2A,SOD-323	QDSS01	BAT54HT1(STATIC)	04713
E01	Connector, Quick-Dis, M,1/4 Tab, PWB	HR26	1287	91833
E02	Connector, Quick-Dis, M,1/4 Tab, PWB	HR26	1287	91833
J01	Conn, Socket, D-Sub, 25 pin, PWB Mt	JS13	K22-B25S-NJ	22421
J02	Conn, Socket, D-Sub, 25 pin, PWB Mt	JS13	K22-B25S-NJ	22421
J03	Conn, Socket, D-Sub, 25 pin, PWB Mt	JS13	K22-B25S-NJ	22421
J04	Conn, Socket, D-Sub, 25 pin, PWB Mt	JS13	K22-B25S-NJ	22421
J05	Conn, Socket, D-Sub, 25 pin, PWB Mt	JS13	K22-B25S-NJ	22421
J06	Connector,Header,2 Pin,90 PWB,66A,600v 10.16mm	JT93	1998933	PHOENIX
J07	Connector,Header,2 Pin,90 PWB,66A,600v 10.16mm	JT93	1998933	PHOENIX
J08	Conn, Socket, D-Sub, 25 pin, PWB Mt	JS13	K22-B25S-NJ	22421
J09	Conn, Socket, D-Sub, 25 pin, PWB Mt	JS13	K22-B25S-NJ	22421
J10	Conn, Plug, D-Sub, 25 pin, PWB Mt	JS12	K22X-B25P-NJ	63590
J11	Conn, Socket, D-Sub, 25 pin, PWB Mt	JS13	K22-B25S-NJ	22421
J12	Conn, Plug, D-Sub, 25 pin, PWB Mt	JS12	K22X-B25P-NJ	63590

Continued from previous page

NAPI152A Rack Interface PWB Assy

REFDES	DESCRIPTION	NAUTEL #	VENDOR #	OEM CODE
J13	Conn, Socket, D-Sub, 9 pin, PWB Mt	JQ34	K22-E9S-NJ	KYCON
J14	Conn, Socket, D-Sub, 9 pin, PWB Mt	JQ34	K22-E9S-NJ	KYCON
J15	Conn, Plug, D-Sub, 25 pin, PWB Mt	JS12	K22X-B25P-NJ	63590
J16	Conn, Header,Square Post,Gold,Dual,40-pin	JF47	4-102973-0	09482
K01	Not Used	-	NOT USED	37338
L01	Inductor, SMT, Choke, 600ohms,2A, 0805	LCFS01	ILHB0805RK601V	56845
L02	Not Used	-	NOT USED	37338
L03	Inductor, Choke, 2.5 Turns, JMtl	LA16	82-152-J	33062
L04	Choke, SMT, Common Mode, 7000ohm, 700mA	LS23	CM2824E702R-10(RoHS)	
L05	Inductor, Choke, 2.5 Turns, JMtl	LA16	82-152-J	33062
L06	Not Used	-	NOT USED	37338
L07	Not Used	-	NOT USED	37338
L08	Not Used	-	NOT USED	37338
L09	Not Used	-	NOT USED	37338
Q01	Transistor,SMT,MOSFET,N-channel,SOT-223	QMNS01	MMFT960T1(STATIC)	04713
Q02	Thyristor, SCR, 65A, 400V	QR28	S4065K	27194
Q03	Thyristor, SCR, 65A, 400V	QR28	S4065K	27194
R001	Resistor,SMT,MF,221ohms,1%,1/10W,0603	RFFS30	RK73H1JLTD2210F	59124
R002	Not Used	-	NOT USED	37338
R003	Not Used	-	NOT USED	37338
R004	Resistor,SMT,MF,221ohms,1%,1/10W,0603	RFFS30	RK73H1JLTD2210F	59124
R005	Resistor, SMT, MF, 15K Ohms,1%, 1/4W	RAD39	RK73H2BL1502F	59124
R006	Resistor,SMT,MF,1500ohms,1%,1/10W,0603	RFFS40	RK73H1JLTD1501F	59124
R007	Resistor,SMT,MF,1820ohms,1%,1/10W,0603	RFFS41	RK73H1JLTD1821F	59124
R008	Not Used	-	NOT USED	37338
R009	Resistor,SMT,MF,1210ohms,1%,1/10W,0603	RFFS39	RK73H1JLTD1211F	59124
R010	Resistor,SMT,MF,1210ohms,1%,1/10W,0603	RFFS39	RK73H1JLTD1211F	59124
R011	Resistor,SMT,MF,100ohms,1%,1/10W,0603	RFFS26	RK73H1JLTD1000F	59124
R012	Resistor,SMT,MF,100ohms,1%,1/10W,0603	RFFS26	RK73H1JLTD1000F	59124
R013	Not Used	-	NOT USED	37338
R014	Resistor,SMT,MF,100ohms,1%,1/10W,0603	RFFS26	RK73H1JLTD1000F	59124
R015	Resistor,SMT,MF,1000ohms,1%,1/10W,0603	RFFS38	RK73H1JLTD1001F	59124
R016	Not Used	-	NOT USED	37338
R017	Resistor, SMT, MF, 47.5K Ohms, 1% 1/4W	RAD45	RK73H2BL4752F	59124
R018	Not Used	-	NOT USED	37338
R019	Resistor,SMT,MF,1000ohms,1%,1/10W,0603	RFFS38	RK73H1JLTD1001F	59124
R020	Not Used	-	NOT USED	37338
R021	Resistor,SMT,MF,15.0Kohms,1%,1/10W,0603	RFFS52	RK73H1JLTD1502F	59124
R022	Resistor,SMT,MF,475Kohms,1%,1/10W,0603	RFFS70	RK73H1JLTD4753F	59124

Continued from previous page

REFDES	DESCRIPTION	NAUTEL #	VENDOR #	OEM CODE
R023	Resistor,SMT,MF,10.0Kohms,1%,1/10W,0603	RFFS50	RK73H1JLTD1002F	59124
R024	Resistor,SMT,MF,15.0Kohms,1%,1/10W,0603	RFFS52	RK73H1JLTD1502F	59124
R025	Not Used	-	NOT USED	37338
R026	Resistor,SMT,MF,10.0Kohms,1%,1/10W,0603	RFFS50	RK73H1JLTD1002F	59124
R027	Not Used	-	NOT USED	37338
R028	Resistor,SMT,MF,10.0Kohms,1%,1/10W,0603	RFFS50	RK73H1JLTD1002F	59124
R029	Not Used	-	NOT USED	37338
R030	Resistor,SMT,MF,10.0Kohms,1%,1/10W,0603	RFFS50	RK73H1JLTD1002F	59124
R031	Resistor,SMT,MF,475Kohms,1%,1/10W,0603	RFFS70	RK73H1JLTD4753F	59124
R032	Resistor,SMT,MF,1000ohms,1%,1/10W,0603	RFFS38	RK73H1JLTD1001F	59124
R033	Resistor,SMT,MF,475Kohms,1%,1/10W,0603	RFFS70	RK73H1JLTD4753F	59124
R034	Resistor,SMT,MF,15.0Kohms,1%,1/10W,0603	RFFS52	RK73H1JLTD1502F	59124
R035	Resistor,SMT,MF,10.0Kohms,1%,1/10W,0603	RFFS50	RK73H1JLTD1002F	59124
R036	Resistor,SMT,MF,274ohms,1%,1/10W,0603	RFFS31	RK73H1JLTD2740F	59124
R037	Resistor,SMT,MF,274ohms,1%,1/10W,0603	RFFS31	RK73H1JLTD2740F	59124
R038	Resistor,SMT,MF,274ohms,1%,1/10W,0603	RFFS31	RK73H1JLTD2740F	59124
R039	Resistor,SMT,MF,10.0Kohms,1%,1/10W,0603	RFFS50	RK73H1JLTD1002F	59124
R040	Not Used	-	NOT USED	37338
R041	Resistor,SMT,MF,681ohms,1%,1/10W,0603	RFFS36	RK73H1JLTD6810F	59124
R042	Resistor,SMT,MF,8250ohms,1%,1/10W,0603	RFFS49	RK73H1JLTD8251F	59124
R043	Resistor,SMT,MF,1210ohms,1%,1/10W,0603	RFFS39	RK73H1JLTD1211F	59124
R044	Resistor, SMT, MF, 221 Ohms,1% 1/4W	RAD17	RK73H2BL2210F	59124
R045	Resistor, SMT, MF, 221 Ohms,1% 1/4W	RAD17	RK73H2BL2210F	59124
R046	Resistor,SMT,MF,475Kohms,1%,1/10W,0603	RFFS70	RK73H1JLTD4753F	59124
R047	Resistor,SMT,MF,681ohms,1%,1/10W,0603	RFFS36	RK73H1JLTD6810F	59124
R048	Resistor,SMT,MF,1500ohms,1%,1/10W,0603	RFFS40	RK73H1JLTD1501F	59124
R049	Not Used	-	NOT USED	37338
R050	Not Used	-	NOT USED	37338
R051	Resistor,SMT,MF,100ohms,1%,1/10W,0603	RFFS26	RK73H1JLTD1000F	59124
R052	Resistor,SMT,MF,4750ohms,1%,1/10W,0603	RFFS46	RK73H1JLTD4751F	59124
R053	Resistor,SMT,MF,1000ohms,1%,1/10W,0603	RFFS38	RK73H1JLTD1001F	59124
R054	Resistor,SMT,MF,0.0ohms,Jumper,0603	RFFS01	RK73Z1JLTD	59124
R055	Not Used	-	NOT USED	37338
R056	Resistor,SMT,MF,15.0Kohms,1%,1/10W,0603	RFFS52	RK73H1JLTD1502F	59124
R057	Resistor,SMT,MF,1000ohms,1%,1/10W,0603	RFFS38	RK73H1JLTD1001F	59124
R058	Resistor,SMT,MF,475Kohms,1%,1/10W,0603	RFFS70	RK73H1JLTD4753F	59124
R059	Resistor,SMT,MF,1000ohms,1%,1/10W,0603	RFFS38	RK73H1JLTD1001F	59124
R060	Resistor,SMT,MF,15.0Kohms,1%,1/10W,0603	RFFS52	RK73H1JLTD1502F	59124
R061	Resistor,SMT,MF,100Kohms,1%,1/10W,0603	RFFS62	RK73H1JLTD1003F	59124

Continued from previous page

REFDES	DESCRIPTION	NAUTEL #	VENDOR #	OEM CODE
R062	Resistor,SMT,MF,10.0Kohms,1%,1/10W,0603	RFFS50	RK73H1JLTD1002F	59124
R063	Resistor,SMT,MF,0.0ohms,Jumper,0603	RFFS01	RK73Z1JLTD	59124
R064	Resistor,SMT,MF,475Kohms,1%,1/10W,0603	RFFS70	RK73H1JLTD4753F	59124
R065	Resistor, SMT, MF, 1000 Ohms,1% 1/4W	RAD25	RK73H2BL1001F	59124
R066	Resistor,SMT,MF,6810ohms,1%,1/10W,0603	RFFS48	RK73H1JLTD6811F	59124
R067	Resistor,SMT,MF,0.0ohms,Jumper,0603	RFFS01	RK73Z1JLTD	59124
R068	Resistor,SMT,MF,47.5Kohms,1%,1/10W,0603	RFFS58	RK73H1JLTD4752F	59124
R069	Resistor,SMT,MF,47.5Kohms,1%,1/10W,0603	RFFS58	RK73H1JLTD4752F	59124
R070	Resistor,SMT,MF,47.5Kohms,1%,1/10W,0603	RFFS58	RK73H1JLTD4752F	59124
R071	Resistor,SMT,MF,47.5Kohms,1%,1/10W,0603	RFFS58	RK73H1JLTD4752F	59124
R072	Resistor,SMT,MF,47.5Kohms,1%,1/10W,0603	RFFS58	RK73H1JLTD4752F	59124
R073	Resistor,SMT,MF,47.5Kohms,1%,1/10W,0603	RFFS58	RK73H1JLTD4752F	59124
R074	Resistor,SMT,MF,47.5Kohms,1%,1/10W,0603	RFFS58	RK73H1JLTD4752F	59124
R075	Resistor,SMT,MF,47.5Kohms,1%,1/10W,0603	RFFS58	RK73H1JLTD4752F	59124
R076	Resistor,SMT,MF,47.5Kohms,1%,1/10W,0603	RFFS58	RK73H1JLTD4752F	59124
R077	Resistor,SMT,MF,1210ohms,1%,1/10W,0603	RFFS39	RK73H1JLTD1211F	59124
R078	Resistor,SMT,MF,10.0Kohms,1%,1/10W,0603	RFFS50	RK73H1JLTD1002F	59124
R079	Resistor,SMT,MF,8250ohms,1%,1/10W,0603	RFFS49	RK73H1JLTD8251F	59124
R080	Resistor,SMT,MF,10.0ohms,1%,1/10W,0603	RFFS14	RK73H1JLTD10R0F	59124
R081	Resistor,SMT,MF,12.1Kohms,1%,1/10W,0603	RFFS51	RK73H1JLTD1212F	59124
R082	Resistor,SMT,MF,10.0Kohms,1%,1/10W,0603	RFFS50	RK73H1JLTD1002F	59124
R083	Resistor,SMT,MF,10.0Kohms,1%,1/10W,0603	RFFS50	RK73H1JLTD1002F	59124
R084	Resistor, SMT, MF, 1000 Ohms,1% 1/4W	RAD25	RK73H2BL1001F	59124
R085	Resistor,SMT,MF,1210ohms,1%,1/10W,0603	RFFS39	RK73H1JLTD1211F	59124
R086	Resistor,SMT,MF,10.0Kohms,1%,1/10W,0603	RFFS50	RK73H1JLTD1002F	59124
R087	Resistor,SMT,MF,8250ohms,1%,1/10W,0603	RFFS49	RK73H1JLTD8251F	59124
R088	Resistor,SMT,MF,10.0ohms,1%,1/10W,0603	RFFS14	RK73H1JLTD10R0F	59124
R089	Resistor,SMT,MF,10.0Kohms,1%,1/10W,0603	RFFS50	RK73H1JLTD1002F	59124
R090	Resistor,SMT,MF,10.0Kohms,1%,1/10W,0603	RFFS50	RK73H1JLTD1002F	59124
R091	Resistor,SMT,MF,10.0Kohms,1%,1/10W,0603	RFFS50	RK73H1JLTD1002F	59124
R092	Resistor,SMT,MF,10.0Kohms,1%,1/10W,0603	RFFS50	RK73H1JLTD1002F	59124
R093	Resistor, SMT, MF, 1000 Ohms,1% 1/4W	RAD25	RK73H2BL1001F	59124
R094	Resistor,SMT,MF,10.0Kohms,1%,1/10W,0603	RFFS50	RK73H1JLTD1002F	59124
R095	Resistor,SMT,MF,47.5Kohms,1%,1/10W,0603	RFFS58	RK73H1JLTD4752F	59124
R096	Resistor,SMT,MF,47.5Kohms,1%,1/10W,0603	RFFS58	RK73H1JLTD4752F	59124
R097	Resistor,SMT,MF,10.0Kohms,1%,1/10W,0603	RFFS50	RK73H1JLTD1002F	59124
R098	Resistor,SMT,MF,10.0Kohms,1%,1/10W,0603	RFFS50	RK73H1JLTD1002F	59124
R099	Resistor,SMT,MF,10.0Kohms,1%,1/10W,0603	RFFS50	RK73H1JLTD1002F	59124
R100	Resistor,SMT,MF,10.0Kohms,1%,1/10W,0603	RFFS50	RK73H1JLTD1002F	59124

Continued from previous page

NAPI152A Rack Interface PWB Assy

REFDES	DESCRIPTION	NAUTEL #	VENDOR #	OEM CODE
R101	Resistor,SMT,MF,10.0Kohms,1%,1/10W,0603	RFFS50	RK73H1JLTD1002F	59124
R102	Resistor,SMT,MF,10.0ohms,1%,1/10W,0603	RFFS14	RK73H1JLTD10R0F	59124
R103	Not Used	-	NOT USED	37338
R104	Resistor,SMT,MF,3320ohms,1%,1/10W,0603	RFFS44	RK73H1JLTD3321F	59124
R105	Resistor,SMT,MF,475Kohms,1%,1/10W,0603	RFFS70	RK73H1JLTD4753F	59124
R106	Resistor,SMT,MF,475Kohms,1%,1/10W,0603	RFFS70	RK73H1JLTD4753F	59124
R107	Resistor,SMT,MF,15.0Kohms,1%,1/10W,0603	RFFS52	RK73H1JLTD1502F	59124
R108	Resistor,SMT,MF,22.1Kohms,1%,1/10W,0603	RFFS54	RK73H1JLTD2212F	59124
R109	Resistor,SMT,MF,475Kohms,1%,1/10W,0603	RFFS70	RK73H1JLTD4753F	59124
R110	Resistor,SMT,MF,10.0Kohms,1%,1/10W,0603	RFFS50	RK73H1JLTD1002F	59124
R111	Resistor,SMT,MF,10.0Kohms,1%,1/10W,0603	RFFS50	RK73H1JLTD1002F	59124
R112	Resistor,SMT,MF,10.0Kohms,1%,1/10W,0603	RFFS50	RK73H1JLTD1002F	59124
R113	Resistor,SMT,MF,475Kohms,1%,1/10W,0603	RFFS70	RK73H1JLTD4753F	59124
R114	Resistor,SMT,MF,10.0Kohms,1%,1/10W,0603	RFFS50	RK73H1JLTD1002F	59124
R115	Resistor,SMT,MF,475Kohms,1%,1/10W,0603	RFFS70	RK73H1JLTD4753F	59124
R116	Resistor,SMT,MF,475Kohms,1%,1/10W,0603	RFFS70	RK73H1JLTD4753F	59124
R117	Resistor,SMT,MF,475Kohms,1%,1/10W,0603	RFFS70	RK73H1JLTD4753F	59124
R118	Resistor,SMT,MF,10.0Kohms,1%,1/10W,0603	RFFS50	RK73H1JLTD1002F	59124
R119	Resistor,SMT,MF,1210ohms,1%,1/10W,0603	RFFS39	RK73H1JLTD1211F	59124
R120	Resistor,SMT,MF,8250ohms,1%,1/10W,0603	RFFS49	RK73H1JLTD8251F	59124
R121	Resistor,SMT,MF,5620ohms,1%,1/10W,0603	RFFS47	RK73H1JLTD5621F	59124
R122	Resistor,SMT,MF,3920ohms,1%,1/10W,0603	RFFS45	RK73H1JLTD3921F	59124
R123	Resistor,SMT,MF,475Kohms,1%,1/10W,0603	RFFS70	RK73H1JLTD4753F	59124
R124	Resistor,SMT,MF,10.0Kohms,1%,1/10W,0603	RFFS50	RK73H1JLTD1002F	59124
R125	Resistor,SMT,MF,100ohms,1%,1/10W,0603	RFFS26	RK73H1JLTD1000F	59124
R126	Resistor,SMT,MF,475Kohms,1%,1/10W,0603	RFFS70	RK73H1JLTD4753F	59124
R127	Resistor,SMT,MF,47.5Kohms,1%,1/10W,0603	RFFS58	RK73H1JLTD4752F	59124
R128	Resistor,SMT,MF,47.5Kohms,1%,1/10W,0603	RFFS58	RK73H1JLTD4752F	59124
R129	Resistor,SMT,MF,47.5Kohms,1%,1/10W,0603	RFFS58	RK73H1JLTD4752F	59124
R130	Resistor,SMT,MF,47.5Kohms,1%,1/10W,0603	RFFS58	RK73H1JLTD4752F	59124
R131	Resistor,SMT,MF,47.5Kohms,1%,1/10W,0603	RFFS58	RK73H1JLTD4752F	59124
R132	Resistor,SMT,MF,221ohms,1%,1/10W,0603	RFFS30	RK73H1JLTD2210F	59124
R133	Resistor,SMT,MF,15.0Kohms,1%,1/10W,0603	RFFS52	RK73H1JLTD1502F	59124
R134	Resistor,SMT,MF,475Kohms,1%,1/10W,0603	RFFS70	RK73H1JLTD4753F	59124
R135	Resistor,SMT,MF,221ohms,1%,1/10W,0603	RFFS30	RK73H1JLTD2210F	59124
R136	Resistor,SMT,MF,2210ohms,1%,1/10W,0603	RFFS42	RK73H1JLTD2211F	59124
R137	Resistor,SMT,MF,47.5Kohms,1%,1/10W,0603	RFFS58	RK73H1JLTD4752F	59124
R138	Resistor,SMT,MF,47.5Kohms,1%,1/10W,0603	RFFS58	RK73H1JLTD4752F	59124
R139	Resistor,SMT,MF,47.5Kohms,1%,1/10W,0603	RFFS58	RK73H1JLTD4752F	59124

Continued from previous page

REFDES	DESCRIPTION	NAUTEL #	VENDOR #	OEM CODE
R140	Resistor,SMT,MF,47.5Kohms,1%,1/10W,0603	RFFS58	RK73H1JLTD4752F	59124
R141	Resistor,SMT,MF,47.5Kohms,1%,1/10W,0603	RFFS58	RK73H1JLTD4752F	59124
R142	Resistor,SMT,MF,475Kohms,1%,1/10W,0603	RFFS70	RK73H1JLTD4753F	59124
R143	Resistor,SMT,MF,475Kohms,1%,1/10W,0603	RFFS70	RK73H1JLTD4753F	59124
R144	Resistor,SMT,MF,100Kohms,1%,1/10W,0603	RFFS62	RK73H1JLTD1003F	59124
R145	Resistor,SMT,MF,47.5Kohms,1%,1/10W,0603	RFFS58	RK73H1JLTD4752F	59124
R146	Resistor,SMT,MF,0.0ohms,Jumper,0603	RFFS01	RK73Z1JLTD	59124
R147	Resistor,SMT,MF,0.0ohms,Jumper,0603	RFFS01	RK73Z1JLTD	59124
R148	Resistor,SMT,MF,10.0Kohms,1%,1/10W,0603	RFFS50	RK73H1JLTD1002F	59124
R149	Resistor,SMT,MF,0.0ohms,Jumper,0603	RFFS01	RK73Z1JLTD	59124
R150	Resistor,SMT,MF,22.1Kohms,1%,1/10W,0603	RFFS54	RK73H1JLTD2212F	59124
R151	Resistor,SMT,MF,1000ohms,1%,1/10W,0603	RFFS38	RK73H1JLTD1001F	59124
R152	Resistor,SMT,MF,10.0Kohms,1%,1/10W,0603	RFFS50	RK73H1JLTD1002F	59124
R153	Resistor,SMT,MF,1500ohms,1%,1/10W,0603	RFFS40	RK73H1JLTD1501F	59124
R154	Resistor,SMT,MF,100Kohms,1%,1/10W,0603	RFFS62	RK73H1JLTD1003F	59124
R155	Resistor,SMT,MF,1500ohms,1%,1/10W,0603	RFFS40	RK73H1JLTD1501F	59124
R156	Resistor,SMT,MF,10.0Kohms,1%,1/10W,0603	RFFS50	RK73H1JLTD1002F	59124
R157	Resistor,SMT,MF,10.0Kohms,1%,1/10W,0603	RFFS50	RK73H1JLTD1002F	59124
R158	Resistor,SMT,MF,10.0Kohms,1%,1/10W,0603	RFFS50	RK73H1JLTD1002F	59124
R159	Resistor,SMT,MF,10.0Kohms,1%,1/10W,0603	RFFS50	RK73H1JLTD1002F	59124
R160	Resistor,SMT,MF,10.0Kohms,1%,1/10W,0603	RFFS50	RK73H1JLTD1002F	59124
R161	Resistor,SMT,MF,10.0Kohms,1%,1/10W,0603	RFFS50	RK73H1JLTD1002F	59124
R162	Resistor,SMT,MF,10.0Kohms,1%,1/10W,0603	RFFS50	RK73H1JLTD1002F	59124
R163	Resistor,SMT,MF,1500ohms,1%,1/10W,0603	RFFS40	RK73H1JLTD1501F	59124
R164	Resistor,SMT,MF,1500ohms,1%,1/10W,0603	RFFS40	RK73H1JLTD1501F	59124
R165	Resistor,SMT,MF,1500ohms,1%,1/10W,0603	RFFS40	RK73H1JLTD1501F	59124
R166	Resistor,SMT,MF,100ohms,1%,1/10W,0603	RFFS26	RK73H1JLTD1000F	59124
R167	Resistor,SMT,MF,100ohms,1%,1/10W,0603	RFFS26	RK73H1JLTD1000F	59124
R168	Resistor,SMT,MF,10.0Kohms,1%,1/10W,0603	RFFS50	RK73H1JLTD1002F	59124
R169	Resistor,SMT,MF,10.0ohms,1%,1/10W,0603	RFFS14	RK73H1JLTD10R0F	59124
R170	Resistor,SMT,MF,10.0ohms,1%,1/10W,0603	RFFS14	RK73H1JLTD10R0F	59124
R171	Resistor,SMT,MF,10.0ohms,1%,1/10W,0603	RFFS14	RK73H1JLTD10R0F	59124
R172	Resistor,SMT,MF,4750ohms,1%,1/10W,0603	RFFS46	RK73H1JLTD4751F	59124
R173	Resistor,SMT,MF,1000ohms,1%,1/10W,0603	RFFS38	RK73H1JLTD1001F	59124
R174	Resistor,SMT,MF,22.1Kohms,1%,1/10W,0603	RFFS54	RK73H1JLTD2212F	59124
R175	Resistor,SMT,MF,22.1Kohms,1%,1/10W,0603	RFFS54	RK73H1JLTD2212F	59124
R176	Resistor,SMT,MF,1000ohms,1%,1/10W,0603	RFFS38	RK73H1JLTD1001F	59124
R177	Resistor,SMT,MF,22.1Kohms,1%,1/10W,0603	RFFS54	RK73H1JLTD2212F	59124
R178	Resistor,SMT,MF,22.1Kohms,1%,1/10W,0603	RFFS54	RK73H1JLTD2212F	59124

Continued from previous page

NAPI152A Rack Interface PWB Assy

REFDES	DESCRIPTION	NAUTEL #	VENDOR #	OEM CODE
R179	Resistor,SMT,MF,4750ohms,1%,1/10W,0603	RFFS46	RK73H1JLTD4751F	59124
R180	Resistor,SMT,MF,100ohms,1%,1/10W,0603	RFFS26	RK73H1JLTD1000F	59124
R181	Resistor,SMT,MF,100ohms,1%,1/10W,0603	RFFS26	RK73H1JLTD1000F	59124
R182	Resistor,SMT,MF,4750ohms,1%,1/10W,0603	RFFS46	RK73H1JLTD4751F	59124
R183	Not Used	-	NOT USED	37338
R184	Not Used	-	NOT USED	37338
R185	Not Used	-	NOT USED	37338
R186	Resistor, SMT, 3.9 Ohms, 1%, 1W, 2512	RAD58	ERJ-1TRQF3R9U	
R187	Resistor, SMT, 3.9 Ohms, 1%, 1W, 2512	RAD58	ERJ-1TRQF3R9U	
R188	Resistor,SMT,MF,0.0ohms,Jumper,0603	RFFS01	RK73Z1JLTD	59124
R189	Not Used	-	NOT USED	37338
R190	Resistor, SMT, 2 Ohms, 5%, 1/4W, 1206	RAD75	ERJ-8GEYJ2R0V(STATIC)(RoHS)	
R191	Not Used	-	NOT USED	37338
R192	Resistor,SMT,MF,1210ohms,1%,1/10W,0603	RFFS39	RK73H1JLTD1211F	59124
R193	Resistor, SMT, MF, 49.9 Ohms,1% 1/4W	RAE21	RK73H2BL49R9F	59124
R194	Resistor, SMT, MF, 49.9 Ohms,1% 1/4W	RAE21	RK73H2BL49R9F	59124
R195	Resistor,SMT,MF,221ohms,1%,1/10W,0603	RFFS30	RK73H1JLTD2210F	59124
R196	Resistor,SMT,MF,1000ohms,1%,1/10W,0603	RFFS38	RK73H1JLTD1001F	59124
R197	Resistor,SMT,MF,221ohms,1%,1/10W,0603	RFFS30	RK73H1JLTD2210F	59124
R198	Resistor,SMT,MF,1000ohms,1%,1/10W,0603	RFFS38	RK73H1JLTD1001F	59124
R199	Resistor,SMT,MF,1210ohms,1%,1/10W,0603	RFFS39	RK73H1JLTD1211F	59124
R200	Resistor,SMT,MF,4750ohms,1%,1/10W,0603	RFFS46	RK73H1JLTD4751F	59124
R201	Not Used	-	NOT USED	37338
R202	Resistor,SMT,MF,4750ohms,1%,1/10W,0603	RFFS46	RK73H1JLTD4751F	59124
R203	Resistor,SMT,MF,4750ohms,1%,1/10W,0603	RFFS46	RK73H1JLTD4751F	59124
R204	Resistor, SMT, MF, 75Kohms, 1%,1/10W, 0603	RFFS89	RK73H1JLTD7502F	
R205	Resistor,SMT,MF,100ohms,1%,1/10W,0603	RFFS26	RK73H1JLTD1000F	59124
R206	Resistor,SMT,MF,100ohms,1%,1/10W,0603	RFFS26	RK73H1JLTD1000F	59124
R207	Resistor,SMT,MF,100ohms,1%,1/10W,0603	RFFS26	RK73H1JLTD1000F	59124
R208	Not Used	-	NOT USED	37338
R209	Not Used	-	NOT USED	37338
R210	Resistor, SMT, 2 Ohms, 5%, 1/4W, 1206	RAD75	ERJ-8GEYJ2R0V(STATIC)(RoHS)	
R211	Not Used	-	NOT USED	37338
R212	Not Used	-	NOT USED	37338
R213	Not Used	-	NOT USED	37338
R214	Not Used	-	NOT USED	37338
R215	Resistor, SMT, 3.9 Ohms, 1%, 1W, 2512	RAD58	ERJ-1TRQF3R9U	

Continued from previous page

REFDES	DESCRIPTION	NAUTEL #	VENDOR #	OEM CODE
R216	Not Used	-	NOT USED	37338
R217	Not Used	-	NOT USED	37338
R218	Resistor, SMT, 3.9 Ohms, 1%, 1W, 2512	RAD58	ERJ-1TRQF3R9U	
R219	Not Used	-	NOT USED	37338
R220	Resistor,SMT,MF,221ohms,1%,1/10W,0603	RFFS30	RK73H1JLTD2210F	59124
R221	Resistor,SMT,MF,221ohms,1%,1/10W,0603	RFFS30	RK73H1JLTD2210F	59124
R222	Resistor, SMT, 2 Ohms, 5%, 1/4W, 1206	RAD75	ERJ-8GEYJ2R0V(STATIC)(RoHS)	
R223	Not Used	-	NOT USED	37338
R224	Not Used	-	NOT USED	37338
R225	Not Used	-	NOT USED	37338
R226	Resistor, SMT, 3.9 Ohms, 1%, 1W, 2512	RAD58	ERJ-1TRQF3R9U	
R227	Not Used	-	NOT USED	37338
R228	Not Used	-	NOT USED	37338
R229	Not Used	-	NOT USED	37338
R230	Resistor, SMT, 3.9 Ohms, 1%, 1W, 2512	RAD58	ERJ-1TRQF3R9U	
R231	Not Used	-	NOT USED	37338
R232	Resistor,SMT,MF,221ohms,1%,1/10W,0603	RFFS30	RK73H1JLTD2210F	59124
R233	Resistor,SMT,MF,221ohms,1%,1/10W,0603	RFFS30	RK73H1JLTD2210F	59124
R234	Not Used	-	NOT USED	37338
R235	Resistor,SMT,MF,221ohms,1%,1/10W,0603	RFFS30	RK73H1JLTD2210F	59124
R236	Not Used	-	NOT USED	37338
R237	Not Used	-	NOT USED	37338
R238	Not Used	-	NOT USED	37338
R239	Not Used	-	NOT USED	37338
R240	Resistor, SMT, 2 Ohms, 5%, 1/4W, 1206	RAD75	ERJ-8GEYJ2R0V(STATIC)(RoHS)	
R241	Not Used	-	NOT USED	37338
R242	Resistor,SMT,MF,221ohms,1%,1/10W,0603	RFFS30	RK73H1JLTD2210F	59124
R243	Resistor, SMT, 3.9 Ohms, 1%, 1W, 2512	RAD58	ERJ-1TRQF3R9U	
R244	Resistor, SMT, 3.9 Ohms, 1%, 1W, 2512	RAD58	ERJ-1TRQF3R9U	
R245	Not Used	-	NOT USED	37338
R246	Not Used	-	NOT USED	37338
R247	Resistor,SMT,MF,221ohms,1%,1/10W,0603	RFFS30	RK73H1JLTD2210F	59124
R248	Resistor,SMT,MF,221ohms,1%,1/10W,0603	RFFS30	RK73H1JLTD2210F	59124
R249	Resistor, SMT, 3.9 Ohms, 1%, 1W, 2512	RAD58	ERJ-1TRQF3R9U	
R250	Not Used	-	NOT USED	37338
R251	Not Used	-	NOT USED	37338
R252	Not Used	-	NOT USED	37338

Continued from previous page

NAPI152A Rack Interface PWB Assy

REFDES	DESCRIPTION	NAUTEL #	VENDOR #	OEM CODE
R253	Resistor, SMT, 3.9 Ohms, 1%, 1W, 2512	RAD58	ERJ-1TRQF3R9U	
R254	Not Used	-	NOT USED	37338
R255	Not Used	-	NOT USED	37338
R256	Resistor, SMT, 2 Ohms, 5%, 1/4W, 1206	RAD75	ERJ-8GEYJ2R0V(STATIC)(RoHS)	
R257	Not Used	-	NOT USED	37338
R258	Resistor,SMT,MF,4750ohms,1%,1/10W,0603	RFFS46	RK73H1JLTD4751F	59124
R259	Resistor,SMT,MF,221ohms,1%,1/10W,0603	RFFS30	RK73H1JLTD2210F	59124
R260	Resistor,SMT,MF,221ohms,1%,1/10W,0603	RFFS30	RK73H1JLTD2210F	59124
R261	Resistor,SMT,MF,221ohms,1%,1/10W,0603	RFFS30	RK73H1JLTD2210F	59124
R262	Resistor,SMT,MF,221ohms,1%,1/10W,0603	RFFS30	RK73H1JLTD2210F	59124
R263	Resistor,SMT,MF,221ohms,1%,1/10W,0603	RFFS30	RK73H1JLTD2210F	59124
R264	Resistor,SMT,MF,221ohms,1%,1/10W,0603	RFFS30	RK73H1JLTD2210F	59124
R265	Resistor,SMT,MF,221ohms,1%,1/10W,0603	RFFS30	RK73H1JLTD2210F	59124
R266	Resistor,SMT,MF,221ohms,1%,1/10W,0603	RFFS30	RK73H1JLTD2210F	59124
R267	Resistor,SMT,MF,221ohms,1%,1/10W,0603	RFFS30	RK73H1JLTD2210F	59124
R268	Resistor,SMT,MF,221ohms,1%,1/10W,0603	RFFS30	RK73H1JLTD2210F	59124
RT01	Thermistor, PTC, .05-.08 Ohms, 2.5A Hold	RT19	RXE250	4G927
RT02	Thermistor, PTC, .05-.08 Ohms, 2.5A Hold	RT19	RXE250	4G927
RT03	Thermistor, PTC, .05-.08 Ohms, 2.5A Hold	RT19	RXE250	4G927
RT04	Thermistor, PTC, .05-.08 Ohms, 2.5A Hold	RT19	RXE250	4G927
RT05	Thermistor, PTC, .05-.08 Ohms, 2.5A Hold	RT19	RXE250	4G927
RT06	Thermistor, PTC, .05-.08 Ohms, 2.5A Hold	RT19	RXE250	4G927
RT07	Thermistor, PTC, .05-.08 Ohms, 2.5A Hold	RT19	RXE250	4G927
RT08	Thermistor, PTC, .05-.08 Ohms, 2.5A Hold	RT19	RXE250	4G927
RT09	Thermistor, PTC, .05-.08 Ohms, 2.5A Hold	RT19	RXE250	4G927
RT10	Thermistor, PTC, .05-.08 Ohms, 2.5A Hold	RT19	RXE250	4G927
RT11	Thermistor, PTC, .005-.02 Ohms6A Hold	RT55	RUEF600(RoHS)	
RT12	Thermistor, PTC, .005-.02 Ohms6A Hold	RT55	RUEF600(RoHS)	
RT13	Thermistor, PTC, .05-.08 Ohms, 2.5A Hold	RT19	RXE250	4G927
RT14	Thermistor, PTC, .05-.08 Ohms, 2.5A Hold	RT19	RXE250	4G927
RT15	Thermistor, PTC, .05-.08 Ohms, 2.5A Hold	RT19	RXE250	4G927
RT16	Thermistor, PTC, .05-.08 Ohms, 2.5A Hold	RT19	RXE250	4G927
RT17	Thermistor, PTC, .05-.08 Ohms, 2.5A Hold	RT19	RXE250	4G927
RT18	Thermistor, PTC, .05-.08 Ohms, 2.5A Hold	RT19	RXE250	4G927
RT19	Thermistor, PTC, .05-.08 Ohms, 2.5A Hold	RT19	RXE250	4G927
RT20	Thermistor, PTC, .15-.25 Ohms, 1.1A Hold	RT17	RXE110	06090
RT21	Thermistor, PTC, .005-.02 Ohms6A Hold	RT55	RUEF600(RoHS)	
S01	Switch, 8-position, DIP, 1PST	SC40	76SB08	81073

Continued from previous page

NAPI152A Rack Interface PWB Assy

REFDES	DESCRIPTION	NAUTEL #	VENDOR #	OEM CODE
T01	Signal Transformer, 1.1VA230V/36V	TD46	DST-2-36	08779
TP07	Terminal, SMT, Test Point, PWB	HAJ66	TP-107-02-1-T(RoHS) COMPONENTS CORP	
TP15	Terminal, SMT, Test Point, PWB	HAJ66	TP-107-02-1-T(RoHS) COMPONENTS CORP	
TP25	Terminal, SMT, Test Point, PWB	HAJ66	TP-107-02-1-T(RoHS) COMPONENTS CORP	
TP26	Terminal, SMT, Test Point, PWB	HAJ66	TP-107-02-1-T(RoHS) COMPONENTS CORP	
TP27	Terminal, SMT, Test Point, PWB	HAJ66	TP-107-02-1-T(RoHS) COMPONENTS CORP	
TP28	Terminal, SMT, Test Point, PWB	HAJ66	TP-107-02-1-T(RoHS) COMPONENTS CORP	
TP29	Terminal, SMT, Test Point, PWB	HAJ66	TP-107-02-1-T(RoHS) COMPONENTS CORP	
TP37	Terminal, SMT, Test Point, PWB	HAJ66	TP-107-02-1-T(RoHS) COMPONENTS CORP	
TP49	Terminal, SMT, Test Point, PWB	HAJ66	TP-107-02-1-T(RoHS) COMPONENTS CORP	
U01	IC,SMT,RS-485 Transceiver,Sgl,SOIC-8	UDTS03	DS36C278TM(STATIC)	27014
U02	IC,DC-DC Converter,OUT .75V-5.5V@10A,IN 9-18V	UT102	ATL010A0X43-SR(STATIC)	TYCO
U03	Diode,Schottky,Dual 20A,A-K-A,TO-247 15V VRRM	QK51	STPS40L15CW(STATIC)	STMICRO
U04	IC,DC-DC Converter,OUT .75V-5.5V@10A,IN 9-18V	UT102	ATL010A0X43-SR(STATIC)	TYCO
U05	IC,SMT,CMOS,Hex Schm,Trig,Inv,SOIC-14	UDLS03	SN74AHCT14D(STATIC)	01295
U06	IC, SMT, Micro, ADC, PWM,Flash, TQFP-64	UDMS02	ATMEGA128-16AI(STATIC)	1FN41
U07	IC,SMT,Microprocessor Supervisor, SC70	UDSS02	ADM803-MAKS(STATIC)	24355
U08	IC, SMT, CMOS, Octal Latch,SOIC-20	UDLS02	SN74AHC573DW(STATIC)	01295
U09	Not Used	-	NOT USED	37338
U10	IC,SMT,RS-485 Transceiver,Sgl,SOIC-8	UDTS03	DS36C278TM(STATIC)	27014
U11	IC,DC-DC Converter,OUT +/-15V@0.5A,15W, IN 9-36V	UT101	AEE00CC18-L (STATIC)	ASTEC
U12	IC,SMT,Opamp,Quad,Single Supply,SOIC-14	ULAS01	MC33074AD(STATIC)	04713
U13	IC, SMT, SRAM, 32Kx8, SOIC-28(Wide)	UDMS01	CY62256NLL-55SNXI(STATIC)(RoHS)	65786

Continued from previous page

NAPI152A Rack Interface PWB Assy

REFDES	DESCRIPTION	NAUTEL #	VENDOR #	OEM CODE
U14	IC,DC-DC Converter,OUT +/-15V@0.5A,15W, IN 9-36V	UT101	AEE00CC18-L (STATIC)	ASTEC
U15	IC,SMT,ADC,10-Bit,11-ch,SPI,SOIC-20	UMAS01	TLC1543IDW(STATIC)	01295
U16	IC,SMT,Opamp,Quad,Single Supply,SOIC-14	ULAS01	MC33074AD(STATIC)	04713
U17	IC,SMT,Opamp,Quad,Rail-To-Rail,SOIC-14	ULAS02	TLV2374ID(STATIC)	01295
U18	IC,SMT,DAC,8-Bit,4-ch,SPI,SOIC-14	UMDS01	TLV5620ID(STATIC)	64155
U19	IC,SMT,2.5V Reference,0.1%,SOT-23-6	UX83	LT1790BIS6-2.5(STATIC)	64155
U20	IC,SMT,Opamp,Quad,Rail-To-Rail,SOIC-14	ULAS02	TLV2374ID(STATIC)	01295
U21	IC,SMT,ADC,10-Bit,11-ch,SPI,SOIC-20	UMAS01	TLC1543IDW(STATIC)	01295
U22	IC,DC-DC Converter,OUT +/-15V@0.5A,15W, IN 9-36V	UT101	AEE00CC18-L (STATIC)	ASTEC
U23	IC,SMT,Comparator,Quad,SOIC-14	ULCS01	MC3302D(STATIC)	04713
U24	IC,SMT,CMOS,Quad Tri-State Buffer, SOIC-14	UDLS06	MC74HC125AD(STATIC)	04713
U25	IC,DC-DC Converter,OUT +/-15V@0.5A,15W, IN 9-36V	UT101	AEE00CC18-L (STATIC)	ASTEC
U26	IC,SMT,CMOS,8-Bit Shft Reg,Par I/P, SOIC-16	UDLS04	MC74HC165AD(STATIC)	04713
U27	IC,SMT,CMOS,Hex Schm,Trig,Inv,SOIC-14	UDLS03	SN74AHCT14D(STATIC)	01295
U28	IC,SMT,CMOS,8-Bit Shft Reg,Par O/P, SOIC-16	UDLS05	MC74HC595AD(STATIC)	04713
U29	IC,SMT,Trans Array, 7 Darl.,SOIC-16	UDAS01	MC1413BD(STATIC)	04713
U30	IC,SMT,Dual Optocoupler,SOIC-8	UDOS01	MOCD223-M(STATIC)	7D893
U31	IC,SMT,Quad 2-input AND gate,SO-14	UD70	MC74ACT08D(STATIC)	ON SEMI
U32	IC,SMT,RS-485 Transceiver,Sgl,SOIC-8	UDTS03	DS36C278TM(STATIC)	27014
U33	IC,SMT,RS-485 Transceiver,Sgl,SOIC-8	UDTS03	DS36C278TM(STATIC)	27014
U34	IC,SMT,RS-485 Transceiver,Sgl,SOIC-8	UDTS03	DS36C278TM(STATIC)	27014
U35	IC,SMT,RS-485 Transceiver,Sgl,SOIC-8	UDTS03	DS36C278TM(STATIC)	27014
Y01	Crystal,SMT,Fund,Par Res,11.0592MHz	XFPS01	CMR309T11.0592MABJTR	3DX59

REFDES	DESCRIPTION	NAUTEL #	VENDOR #	OEM CODE
C001	Cap,SMT,Ceramic,0.1uF,10%,50V,X7R,0805	CCFS07	C0805C104K5RAC	31433
C002	Cap,SMT,Ceramic,0.1uF,10%,50V,X7R,0805	CCFS07	C0805C104K5RAC	31433
C003	Cap,SMT,Ceramic,0.1uF,10%,50V,X7R,0805	CCFS07	C0805C104K5RAC	31433
C004	Cap,SMT,Ceramic,0.1uF,10%,50V,X7R,0805	CCFS07	C0805C104K5RAC	31433
C005	Cap,SMT,Ceramic,0.1uF,10%,50V,X7R,0805	CCFS07	C0805C104K5RAC	31433
C006	Cap,SMT,Ceramic,0.1uF,10%,50V,X7R,0805	CCFS07	C0805C104K5RAC	31433
C007	Cap,SMT,Ceramic,0.1uF,10%,50V,X7R,0805	CCFS07	C0805C104K5RAC	31433
C008	Cap,SMT,Ceramic,0.1uF,10%,50V,X7R,0805	CCFS07	C0805C104K5RAC	31433
C009	Not Used	-	NOT USED	37338
C010	Not Used	-	NOT USED	37338
C011	Not Used	-	NOT USED	37338
C012	Not Used	-	NOT USED	37338
C013	Cap,SMT,Ceramic,0.1uF,10%,50V,X7R,0805	CCFS07	C0805C104K5RAC	31433
C014	Cap,SMT,Ceramic,1uF,10%,25V,,X7R,1206	CCFS10	C1206C105K3RAC	31433
C015	Cap,SMT,Ceramic,0.1uF,10%,50V,X7R,0805	CCFS07	C0805C104K5RAC	31433
C016	Cap,SMT,Ceramic,1uF,10%,25V,,X7R,1206	CCFS10	C1206C105K3RAC	31433
C017	Not Used	-	NOT USED	37338
C018	Not Used	-	NOT USED	37338
C019	Cap,SMT,Ceramic,0.1uF,10%,50V,X7R,0805	CCFS07	C0805C104K5RAC	31433
C020	Cap,SMT,Ceramic,0.1uF,10%,50V,X7R,0805	CCFS07	C0805C104K5RAC	31433
C021	Not Used	-	NOT USED	37338
C022	Cap,SMT,Ceramic,0.1uF,10%,50V,X7R,0805	CCFS07	C0805C104K5RAC	31433
C023	Cap,SMT,Ceramic,1uF,10%,25V,,X7R,1206	CCFS10	C1206C105K3RAC	31433
C024	Cap,SMT,Ceramic,0.1uF,10%,50V,X7R,0805	CCFS07	C0805C104K5RAC	31433
C025	Cap,SMT,Ceramic,1uF,10%,25V,,X7R,1206	CCFS10	C1206C105K3RAC	31433
C026	Cap,SMT,Ceramic,0.1uF,10%,50V,X7R,0805	CCFS07	C0805C104K5RAC	31433
C027	Cap,SMT,Ceramic,1uF,10%,25V,,X7R,1206	CCFS10	C1206C105K3RAC	31433
C028	Cap,SMT,Ceramic,0.1uF,10%,50V,X7R,0805	CCFS07	C0805C104K5RAC	31433
C029	Cap,SMT,Ceramic,1uF,10%,25V,,X7R,1206	CCFS10	C1206C105K3RAC	31433
C030	Cap,SMT,Ceramic,0.1uF,10%,50V,X7R,0805	CCFS07	C0805C104K5RAC	31433
C031	Cap,SMT,Ceramic,1uF,10%,25V,,X7R,1206	CCFS10	C1206C105K3RAC	31433
C032	Cap,SMT,Ceramic,0.1uF,10%,50V,X7R,0805	CCFS07	C0805C104K5RAC	31433
C033	Cap,SMT,Ceramic,1uF,10%,25V,,X7R,1206	CCFS10	C1206C105K3RAC	31433
C034	Cap,SMT,Ceramic,0.1uF,10%,50V,X7R,0805	CCFS07	C0805C104K5RAC	31433
C035	Cap,SMT,Ceramic,1uF,10%,25V,,X7R,1206	CCFS10	C1206C105K3RAC	31433
C036	Cap,SMT,Ceramic,0.1uF,10%,50V,X7R,0805	CCFS07	C0805C104K5RAC	31433
C037	Cap,SMT,Ceramic,1uF,10%,25V,,X7R,1206	CCFS10	C1206C105K3RAC	31433
C038	Cap,SMT,Ceramic,0.1uF,10%,50V,X7R,0805	CCFS07	C0805C104K5RAC	31433
C039	Cap,SMT,Ceramic,1uF,10%,25V,,X7R,1206	CCFS10	C1206C105K3RAC	31433

Continued from previous page

REFDES	DESCRIPTION	NAUTEL #	VENDOR #	OEM CODE
C040	Cap,SMT,Ceramic,0.1uF,10%,50V,X7R,0805	CCFS07	C0805C104K5RAC	31433
C041	Cap,SMT,Ceramic,1uF,10%,25V,,X7R,1206	CCFS10	C1206C105K3RAC	31433
C042	Cap,SMT,Ceramic,0.1uF,10%,50V,X7R,0805	CCFS07	C0805C104K5RAC	31433
C043	Cap,SMT,Ceramic,1uF,10%,25V,,X7R,1206	CCFS10	C1206C105K3RAC	31433
C044	Cap,SMT,Ceramic,0.1uF,10%,50V,X7R,0805	CCFS07	C0805C104K5RAC	31433
C045	Cap,SMT,Ceramic,1uF,10%,25V,,X7R,1206	CCFS10	C1206C105K3RAC	31433
C046	Cap,SMT,Ceramic,0.1uF,10%,50V,X7R,0805	CCFS07	C0805C104K5RAC	31433
C047	Cap,SMT,Ceramic,1uF,10%,25V,,X7R,1206	CCFS10	C1206C105K3RAC	31433
C048	Cap,SMT,Ceramic,0.1uF,10%,50V,X7R,0805	CCFS07	C0805C104K5RAC	31433
C049	Cap,SMT,Ceramic,1uF,10%,25V,,X7R,1206	CCFS10	C1206C105K3RAC	31433
C050	Cap,SMT,Ceramic,0.1uF,10%,50V,X7R,0805	CCFS07	C0805C104K5RAC	31433
C051	Cap,SMT,Ceramic,1uF,10%,25V,,X7R,1206	CCFS10	C1206C105K3RAC	31433
C052	Cap,SMT,Ceramic,0.1uF,10%,50V,X7R,0805	CCFS07	C0805C104K5RAC	31433
C053	Cap,SMT,Ceramic,1uF,10%,25V,,X7R,1206	CCFS10	C1206C105K3RAC	31433
C054	Cap,SMT,Ceramic,0.1uF,10%,50V,X7R,0805	CCFS07	C0805C104K5RAC	31433
C055	Cap,SMT,Ceramic,1uF,10%,25V,,X7R,1206	CCFS10	C1206C105K3RAC	31433
C056	Cap,SMT,Ceramic,0.1uF,10%,50V,X7R,0805	CCFS07	C0805C104K5RAC	31433
C057	Cap,SMT,Ceramic,1uF,10%,25V,,X7R,1206	CCFS10	C1206C105K3RAC	31433
C058	Cap,SMT,Ceramic,0.1uF,10%,50V,X7R,0805	CCFS07	C0805C104K5RAC	31433
C059	Cap,SMT,Ceramic,1uF,10%,25V,,X7R,1206	CCFS10	C1206C105K3RAC	31433
C060	Cap,SMT,Ceramic,0.1uF,10%,50V,X7R,0805	CCFS07	C0805C104K5RAC	31433
C061	Cap,SMT,Ceramic,1uF,10%,25V,,X7R,1206	CCFS10	C1206C105K3RAC	31433
C062	Cap,SMT,Ceramic,0.1uF,10%,50V,X7R,0805	CCFS07	C0805C104K5RAC	31433
C063	Cap,SMT,Ceramic,1uF,10%,25V,,X7R,1206	CCFS10	C1206C105K3RAC	31433
C064	Cap,SMT,Ceramic,0.1uF,10%,50V,X7R,0805	CCFS07	C0805C104K5RAC	31433
C065	Cap,SMT,Ceramic,1uF,10%,25V,,X7R,1206	CCFS10	C1206C105K3RAC	31433
C066	Cap,SMT,Ceramic,0.1uF,10%,50V,X7R,0805	CCFS07	C0805C104K5RAC	31433
C067	Cap,SMT,Ceramic,1uF,10%,25V,,X7R,1206	CCFS10	C1206C105K3RAC	31433
C068	Cap,SMT,Ceramic,0.1uF,10%,50V,X7R,0805	CCFS07	C0805C104K5RAC	31433
C069	Cap,SMT,Ceramic,1uF,10%,25V,,X7R,1206	CCFS10	C1206C105K3RAC	31433
C070	Cap,SMT,Ceramic,0.1uF,10%,50V,X7R,0805	CCFS07	C0805C104K5RAC	31433
C071	Cap,SMT,Ceramic,1uF,10%,25V,,X7R,1206	CCFS10	C1206C105K3RAC	31433
C072	Cap,SMT,Ceramic,0.1uF,10%,50V,X7R,0805	CCFS07	C0805C104K5RAC	31433
C073	Cap,SMT,Ceramic,1uF,10%,25V,,X7R,1206	CCFS10	C1206C105K3RAC	31433
C074	Cap,SMT,Ceramic,0.1uF,10%,50V,X7R,0805	CCFS07	C0805C104K5RAC	31433
C075	Cap,SMT,Ceramic,1uF,10%,25V,,X7R,1206	CCFS10	C1206C105K3RAC	31433
C076	Cap,SMT,Ceramic,0.1uF,10%,50V,X7R,0805	CCFS07	C0805C104K5RAC	31433
C077	Cap,SMT,Ceramic,1uF,10%,25V,,X7R,1206	CCFS10	C1206C105K3RAC	31433
C078	Cap,SMT,Ceramic,0.1uF,10%,50V,X7R,0805	CCFS07	C0805C104K5RAC	31433

Continued from previous page

REFDES	DESCRIPTION	NAUTEL #	VENDOR #	OEM CODE
C079	Cap,SMT,Ceramic,1uF,10%,25V,,X7R,1206	CCFS10	C1206C105K3RAC	31433
C080	Cap,SMT,Ceramic,0.1uF,10%,50V,X7R,0805	CCFS07	C0805C104K5RAC	31433
C081	Cap,SMT,Ceramic,1uF,10%,25V,,X7R,1206	CCFS10	C1206C105K3RAC	31433
C082	Cap,SMT,Ceramic,0.1uF,10%,50V,X7R,0805	CCFS07	C0805C104K5RAC	31433
C083	Cap,SMT,Ceramic,1uF,10%,25V,,X7R,1206	CCFS10	C1206C105K3RAC	31433
C084	Cap,SMT,Ceramic,0.1uF,10%,50V,X7R,0805	CCFS07	C0805C104K5RAC	31433
C085	Cap,SMT,Ceramic,1uF,10%,25V,,X7R,1206	CCFS10	C1206C105K3RAC	31433
C086	Cap,SMT,Ceramic,0.1uF,10%,50V,X7R,0805	CCFS07	C0805C104K5RAC	31433
C087	Cap,SMT,Ceramic,1uF,10%,25V,,X7R,1206	CCFS10	C1206C105K3RAC	31433
C088	Cap,SMT,Ceramic,0.1uF,10%,50V,X7R,0805	CCFS07	C0805C104K5RAC	31433
C089	Cap,SMT,Ceramic,1uF,10%,25V,,X7R,1206	CCFS10	C1206C105K3RAC	31433
C090	Cap,SMT,Ceramic,0.1uF,10%,50V,X7R,0805	CCFS07	C0805C104K5RAC	31433
C091	Cap,SMT,Ceramic,1uF,10%,25V,,X7R,1206	CCFS10	C1206C105K3RAC	31433
C092	Cap,SMT,Ceramic,0.1uF,10%,50V,X7R,0805	CCFS07	C0805C104K5RAC	31433
C093	Cap,SMT,Ceramic,1uF,10%,25V,,X7R,1206	CCFS10	C1206C105K3RAC	31433
C094	Cap,SMT,Ceramic,0.1uF,10%,50V,X7R,0805	CCFS07	C0805C104K5RAC	31433
C095	Cap,SMT,Ceramic,1uF,10%,25V,,X7R,1206	CCFS10	C1206C105K3RAC	31433
C096	Cap,SMT,Ceramic,0.1uF,10%,50V,X7R,0805	CCFS07	C0805C104K5RAC	31433
C097	Cap,SMT,Ceramic,1uF,10%,25V,,X7R,1206	CCFS10	C1206C105K3RAC	31433
C098	Cap,SMT,Ceramic,0.1uF,10%,50V,X7R,0805	CCFS07	C0805C104K5RAC	31433
C099	Cap,SMT,Ceramic,1uF,10%,25V,,X7R,1206	CCFS10	C1206C105K3RAC	31433
C100	Cap,SMT,Ceramic,0.1uF,10%,50V,X7R,0805	CCFS07	C0805C104K5RAC	31433
C101	Cap,SMT,Ceramic,1uF,10%,25V,,X7R,1206	CCFS10	C1206C105K3RAC	31433
C102	Cap,SMT,Ceramic,0.1uF,10%,50V,X7R,0805	CCFS07	C0805C104K5RAC	31433
C103	Cap,SMT,Ceramic,0.1uF,10%,50V,X7R,0805	CCFS07	C0805C104K5RAC	31433
C104	Cap,SMT,Ceramic,1uF,10%,25V,,X7R,1206	CCFS10	C1206C105K3RAC	31433
C105	Cap,SMT,Ceramic,10uF,20%,6.3V,X5R,0805	CCFS57	C2012X5R0J106M	54583
J01	Connector,Modular,2x4,RJ45,Jack	JT90	569262-1	AMP/TYCO
J02	Connector,Modular,2x4,RJ45,Jack	JT90	569262-1	AMP/TYCO
J03	Connector,Modular,2x4,RJ45,Jack	JT90	569262-1	AMP/TYCO
J04	Connector,Modular,2x4,RJ45,Jack	JT90	569262-1	AMP/TYCO
J05	Connector,Modular,2x4,RJ45,Jack	JT90	569262-1	AMP/TYCO
J06	Conn, Modular Jack, RJ45, Shld, Side, PWB, 50u	JM44	556591-1	09482
J07	Conn, Modular Jack, RJ45, Shld, Side, PWB, 50u	JM44	556591-1	09482
J08	Not Used	-	NOT USED	37338
J09	Conn, Plug, D-Sub, 9 pin, PWBMt	JQ33	K22-E9P-NJ	31781
L01	Choke,SMT,Common Mode,2200 ohm,200mA,1206	LS22	DLW31SN222SQ2L(ROHS)	3EH09
L02	Choke,SMT,Common Mode,2200 ohm,200mA,1206	LS22	DLW31SN222SQ2L(ROHS)	3EH09

Continued from previous page

REFDES	DESCRIPTION	NAUTEL #	VENDOR #	OEM CODE
L03	Choke,SMT,Common Mode,2200 ohm,200mA,1206	LS22	DLW31SN222SQ2L(ROHS)	3EH09
L04	Choke,SMT,Common Mode,2200 ohm,200mA,1206	LS22	DLW31SN222SQ2L(ROHS)	3EH09
L05	Choke,SMT,Common Mode,2200 ohm,200mA,1206	LS22	DLW31SN222SQ2L(ROHS)	3EH09
L06	Choke,SMT,Common Mode,2200 ohm,200mA,1206	LS22	DLW31SN222SQ2L(ROHS)	3EH09
L07	Choke,SMT,Common Mode,2200 ohm,200mA,1206	LS22	DLW31SN222SQ2L(ROHS)	3EH09
L08	Choke,SMT,Common Mode,2200 ohm,200mA,1206	LS22	DLW31SN222SQ2L(ROHS)	3EH09
L09	Not Used	-	NOT USED	37338
L10	Not Used	-	NOT USED	37338
L11	Not Used	-	NOT USED	37338
L12	Not Used	-	NOT USED	37338
L13	Inductor, Choke, 2.5 Turns, JMtl	LA16	82-152-J	33062
R01	Resistor,SMT,MF,0.0ohms,Jumper,0603	RFFS01	RK73Z1JLTD	59124
R02	Resistor,SMT,MF,0.0ohms,Jumper,0603	RFFS01	RK73Z1JLTD	59124
R03	Resistor,SMT,MF,0.0ohms,Jumper,0603	RFFS01	RK73Z1JLTD	59124
R04	Resistor,SMT,MF,0.0ohms,Jumper,0603	RFFS01	RK73Z1JLTD	59124
R05	Resistor,SMT,MF,0.0ohms,Jumper,0603	RFFS01	RK73Z1JLTD	59124
R06	Resistor,SMT,MF,0.0ohms,Jumper,0603	RFFS01	RK73Z1JLTD	59124
R07	Resistor,SMT,MF,0.0ohms,Jumper,0603	RFFS01	RK73Z1JLTD	59124
R08	Resistor,SMT,MF,0.0ohms,Jumper,0603	RFFS01	RK73Z1JLTD	59124
R09	Resistor,SMT,MF,0.0ohms,Jumper,0603	RFFS01	RK73Z1JLTD	59124
R10	Resistor,SMT,MF,0.0ohms,Jumper,0603	RFFS01	RK73Z1JLTD	59124
R11	Resistor,SMT,MF,0.0ohms,Jumper,0603	RFFS01	RK73Z1JLTD	59124
R12	Resistor,SMT,MF,0.0ohms,Jumper,0603	RFFS01	RK73Z1JLTD	59124
R13	Resistor,SMT,MF,0.0ohms,Jumper,0603	RFFS01	RK73Z1JLTD	59124
R14	Resistor,SMT,MF,0.0ohms,Jumper,0603	RFFS01	RK73Z1JLTD	59124
R15	Resistor,SMT,MF,0.0ohms,Jumper,0603	RFFS01	RK73Z1JLTD	59124
R16	Resistor,SMT,MF,0.0ohms,Jumper,0603	RFFS01	RK73Z1JLTD	59124
R17	Not Used	-	NOT USED	37338
R18	Not Used	-	NOT USED	37338
R19	Not Used	-	NOT USED	37338
R20	Not Used	-	NOT USED	37338
R21	Not Used	-	NOT USED	37338
R22	Not Used	-	NOT USED	37338
R23	Not Used	-	NOT USED	37338
R24	Not Used	-	NOT USED	37338
R25	Resistor,SMT,MF,475ohms,1%,1/10W,0603	RFFS34	RK73H1JLTD4750F	59124

Continued from previous page

REFDES	DESCRIPTION	NAUTEL #	VENDOR #	OEM CODE
R26	Resistor,SMT,MF,475ohms,1%,1/10W,0603	RFFS34	RK73H1JLTD4750F	59124
R27	Resistor,SMT,MF,475ohms,1%,1/10W,0603	RFFS34	RK73H1JLTD4750F	59124
R28	Not Used	-	NOT USED	37338
R29	Resistor,SMT,MF,475ohms,1%,1/10W,0603	RFFS34	RK73H1JLTD4750F	59124
R30	Resistor,SMT,MF,475ohms,1%,1/10W,0603	RFFS34	RK73H1JLTD4750F	59124
R31	Resistor,SMT,MF,475ohms,1%,1/10W,0603	RFFS34	RK73H1JLTD4750F	59124
R32	Not Used	-	NOT USED	37338
R33	Not Used	-	NOT USED	37338
R34	Not Used	-	NOT USED	37338
R35	Not Used	-	NOT USED	37338
R36	Not Used	-	NOT USED	37338
R37	Resistor, SMT, MF, 82.5 Ohms,1% 1/4W	RAD12	RK73H2BL82R5F	59124
R38	Resistor, SMT, MF, 82.5 Ohms,1% 1/4W	RAD12	RK73H2BL82R5F	59124
R39	Resistor, SMT, MF, 82.5 Ohms,1% 1/4W	RAD12	RK73H2BL82R5F	59124
R40	Resistor, SMT, MF, 82.5 Ohms,1% 1/4W	RAD12	RK73H2BL82R5F	59124
R41	Resistor, SMT, MF, 82.5 Ohms,1% 1/4W	RAD12	RK73H2BL82R5F	59124
R42	Resistor, SMT, MF, 82.5 Ohms,1% 1/4W	RAD12	RK73H2BL82R5F	59124
R43	Resistor, SMT, MF, 82.5 Ohms,1% 1/4W	RAD12	RK73H2BL82R5F	59124
R44	Resistor, SMT, MF, 82.5 Ohms,1% 1/4W	RAD12	RK73H2BL82R5F	59124
R45	Resistor, SMT, MF, 82.5 Ohms,1% 1/4W	RAD12	RK73H2BL82R5F	59124
R46	Resistor, SMT, MF, 82.5 Ohms,1% 1/4W	RAD12	RK73H2BL82R5F	59124
R47	Resistor, SMT, MF, 82.5 Ohms,1% 1/4W	RAD12	RK73H2BL82R5F	59124
R48	Resistor, SMT, MF, 82.5 Ohms,1% 1/4W	RAD12	RK73H2BL82R5F	59124
R49	Resistor, SMT, MF, 82.5 Ohms,1% 1/4W	RAD12	RK73H2BL82R5F	59124
R50	Resistor, SMT, MF, 82.5 Ohms,1% 1/4W	RAD12	RK73H2BL82R5F	59124
R51	Resistor, SMT, MF, 82.5 Ohms,1% 1/4W	RAD12	RK73H2BL82R5F	59124
R52	Resistor, SMT, MF, 82.5 Ohms,1% 1/4W	RAD12	RK73H2BL82R5F	59124
R53	Not Used	-	NOT USED	37338
R54	Not Used	-	NOT USED	37338
R55	Not Used	-	NOT USED	37338
R56	Not Used	-	NOT USED	37338
R57	Not Used	-	NOT USED	37338
R58	Not Used	-	NOT USED	37338
R59	Not Used	-	NOT USED	37338
R60	Not Used	-	NOT USED	37338
R61	Resistor,SMT,MF,475ohms,1%,1/10W,0603	RFFS34	RK73H1JLTD4750F	59124
R62	Resistor,SMT,MF,475ohms,1%,1/10W,0603	RFFS34	RK73H1JLTD4750F	59124
R63	Resistor,SMT,MF,475ohms,1%,1/10W,0603	RFFS34	RK73H1JLTD4750F	59124
R64	Resistor,SMT,MF,475ohms,1%,1/10W,0603	RFFS34	RK73H1JLTD4750F	59124

Continued from previous page

REFDES	DESCRIPTION	NAUTEL #	VENDOR #	OEM CODE
R65	Not Used	-	NOT USED	37338
R66	Not Used	-	NOT USED	37338
R67	Resistor,SMT,MF,475ohms,1%,1/10W,0603	RFFS34	RK73H1JLTD4750F	59124
R68	Resistor,SMT,MF,475ohms,1%,1/10W,0603	RFFS34	RK73H1JLTD4750F	59124
R69	Not Used	-	NOT USED	37338
R70	Not Used	-	NOT USED	37338
R71	Resistor,SMT,MF,475ohms,1%,1/10W,0603	RFFS34	RK73H1JLTD4750F	59124
R72	Not Used	-	NOT USED	37338
R73	Resistor,SMT,MF,475ohms,1%,1/10W,0603	RFFS34	RK73H1JLTD4750F	59124
R74	Not Used	-	NOT USED	37338
R75	Not Used	-	NOT USED	37338
R76	Resistor,SMT,MF,475ohms,1%,1/10W,0603	RFFS34	RK73H1JLTD4750F	59124
R77	Resistor,SMT,MF,475ohms,1%,1/10W,0603	RFFS34	RK73H1JLTD4750F	59124
R78	Not Used	-	NOT USED	37338
TP01	Terminal, SMT, Test Point, PWB	HAJ66	TP-107-02-1-T(RoHS) COMPONENTS CORP	
TP02	Terminal, SMT, Test Point, PWB	HAJ66	TP-107-02-1-T(RoHS) COMPONENTS CORP	
TP03	Terminal, SMT, Test Point, PWB	HAJ66	TP-107-02-1-T(RoHS) COMPONENTS CORP	
U01	IC,SMT,Quad RS-422 Receiver,16-SOIC	UT91	DS26C32ATM(STATIC)	NATIONAL
U02	IC,SMT,Quad RS-422 Receiver,16-SOIC	UT91	DS26C32ATM(STATIC)	NATIONAL
U03	Not Used	-	NOT USED	37338
U04	IC,SMT,Quad 2 to 1 DATA Sel/Mux 3 States Outputs,5V	UD67	SN74HC257PW(STATIC)(ROHS)	TEXAS
U05	Not Used	-	NOT USED	37338
U06	IC,SMT,Quad RS-422 DIFF LineDriver	UD66	DS26C31T/DS26C31M (STATIC)	NATIONAL
U07	IC,SMT,Quad RS-422 DIFF LineDriver	UD66	DS26C31T/DS26C31M (STATIC)	NATIONAL
U08	IC,SMT,Quad RS-422 DIFF LineDriver	UD66	DS26C31T/DS26C31M (STATIC)	NATIONAL
U09	IC,SMT,Quad RS-422 DIFF LineDriver	UD66	DS26C31T/DS26C31M (STATIC)	NATIONAL
U10	IC,SMT,Quad RS-422 DIFF LineDriver	UD66	DS26C31T/DS26C31M (STATIC)	NATIONAL
U11	IC,SMT,Quad RS-422 DIFF LineDriver	UD66	DS26C31T/DS26C31M (STATIC)	NATIONAL
U12	IC,SMT,Quad RS-422 DIFF LineDriver	UD66	DS26C31T/DS26C31M (STATIC)	NATIONAL
U13	IC,SMT,Quad RS-422 DIFF LineDriver	UD66	DS26C31T/DS26C31M (STATIC)	NATIONAL

Continued from previous page

REFDES	DESCRIPTION	NAUTEL #	VENDOR #	OEM CODE
U14	IC,SMT,Quad RS-422 DIFF LineDriver	UD66	DS26C31T/DS26C31M (STATIC)	NATIONAL
U15	IC,SMT,Quad RS-422 DIFF LineDriver	UD66	DS26C31T/DS26C31M (STATIC)	NATIONAL
U16	IC,SMT,Quad RS-422 DIFF LineDriver	UD66	DS26C31T/DS26C31M (STATIC)	NATIONAL
U17	IC,SMT,Quad RS-422 DIFF LineDriver	UD66	DS26C31T/DS26C31M (STATIC)	NATIONAL
U18	IC,SMT,Quad RS-422 DIFF LineDriver	UD66	DS26C31T/DS26C31M (STATIC)	NATIONAL
U19	IC,SMT,Quad RS-422 DIFF LineDriver	UD66	DS26C31T/DS26C31M (STATIC)	NATIONAL
U20	IC,SMT,Quad RS-422 DIFF LineDriver	UD66	DS26C31T/DS26C31M (STATIC)	NATIONAL
U21	IC,SMT,Quad RS-422 DIFF LineDriver	UD66	DS26C31T/DS26C31M (STATIC)	NATIONAL
U22	IC,SMT,Quad RS-422 DIFF LineDriver	UD66	DS26C31T/DS26C31M (STATIC)	NATIONAL
U23	IC,SMT,Quad RS-422 DIFF LineDriver	UD66	DS26C31T/DS26C31M (STATIC)	NATIONAL
U24	IC,SMT,Quad RS-422 DIFF LineDriver	UD66	DS26C31T/DS26C31M (STATIC)	NATIONAL
U25	IC,SMT,Quad RS-422 DIFF LineDriver	UD66	DS26C31T/DS26C31M (STATIC)	NATIONAL
U26	IC,SMT,Quad RS-422 DIFF LineDriver	UD66	DS26C31T/DS26C31M (STATIC)	NATIONAL
U27	IC,SMT,Quad RS-422 DIFF LineDriver	UD66	DS26C31T/DS26C31M (STATIC)	NATIONAL
U28	IC,SMT,Quad RS-422 DIFF LineDriver	UD66	DS26C31T/DS26C31M (STATIC)	NATIONAL
U29	IC,SMT,Quad RS-422 DIFF LineDriver	UD66	DS26C31T/DS26C31M (STATIC)	NATIONAL
U30	IC,SMT,Quad RS-422 DIFF LineDriver	UD66	DS26C31T/DS26C31M (STATIC)	NATIONAL
U31	IC,SMT,Quad RS-422 DIFF LineDriver	UD66	DS26C31T/DS26C31M (STATIC)	NATIONAL
U32	IC,SMT,Quad RS-422 DIFF LineDriver	UD66	DS26C31T/DS26C31M (STATIC)	NATIONAL
U33	IC,SMT,Quad RS-422 DIFF LineDriver	UD66	DS26C31T/DS26C31M (STATIC)	NATIONAL
U34	IC,SMT,Quad RS-422 DIFF LineDriver	UD66	DS26C31T/DS26C31M (STATIC)	NATIONAL
U35	IC,SMT,Quad RS-422 DIFF LineDriver	UD66	DS26C31T/DS26C31M (STATIC)	NATIONAL
U36	IC,SMT,Quad RS-422 DIFF LineDriver	UD66	DS26C31T/DS26C31M (STATIC)	NATIONAL
U37	IC,SMT,Quad RS-422 DIFF LineDriver	UD66	DS26C31T/DS26C31M (STATIC)	NATIONAL
U38	IC,SMT,Quad RS-422 DIFF LineDriver	UD66	DS26C31T/DS26C31M (STATIC)	NATIONAL
U39	IC,SMT,Quad RS-422 DIFF LineDriver	UD66	DS26C31T/DS26C31M (STATIC)	NATIONAL

Continued from previous page

NAPI154 PDM Drive Distribution PWB

REFDES	DESCRIPTION	NAUTEL #	VENDOR #	OEM CODE
U40	IC,SMT,Quad RS-422 DIFF LineDriver	UD66	DS26C31T/DS26C31M (STATIC)	NATIONAL
U41	IC,SMT,Quad RS-422 DIFF LineDriver	UD66	DS26C31T/DS26C31M (STATIC)	NATIONAL
U42	IC,SMT,Quad RS-422 DIFF LineDriver	UD66	DS26C31T/DS26C31M (STATIC)	NATIONAL
U43	IC,SMT,Quad RS-422 DIFF LineDriver	UD66	DS26C31T/DS26C31M (STATIC)	NATIONAL
U44	IC,SMT,Quad RS-422 DIFF LineDriver	UD66	DS26C31T/DS26C31M (STATIC)	NATIONAL
U45	IC,SMT,Quad RS-422 DIFF LineDriver	UD66	DS26C31T/DS26C31M (STATIC)	NATIONAL

REFDES	DESCRIPTION	NAUTEL #	VENDOR #	OEM CODE
C01	Capacitor, Electrolytic, 470uF450V	CBP15	381LR471M450A052 CORNELL	14655
C02	Capacitor, Electrolytic, 470uF450V	CBP15	381LR471M450A052 CORNELL	14655
C03	Capacitor, Electrolytic, 470uF450V	CBP15	381LR471M450A052 CORNELL	14655
C04	Capacitor, Electrolytic, 470uF450V	CBP15	381LR471M450A052 CORNELL	14655
C05	Capacitor, Elect, 1000uF 50V	CT41	SME50VB102M16X25 LL	1W344
CR01	Diode, General Purpose, 400V,1A	QE28	1N4004	04713
CR02	Diode, General Purpose, 400V,1A	QE28	1N4004	04713
CR03	Diode, General Purpose, 400V,1A	QE28	1N4004	04713
CR04	Diode, General Purpose, 400V,1A	QE28	1N4004	04713
CR05	Diode, General Purpose, 400V,1A	QE28	1N4004	04713
CR06	Diode, General Purpose, 400V,1A	QE28	1N4004	04713
CR07	Diode, General Purpose, 400V,1A	QE28	1N4004	04713
CR08	Diode, General Purpose, 400V,1A	QE28	1N4004	04713
DS01	Diode,LED,Ultrabright,Grn,5mm	QM49	7383/V7C3-ARTA/MS(STATIC)	MARKTEC
DS02	Diode,LED,Ultrabright,Grn,5mm	QM49	7383/V7C3-ARTA/MS(STATIC)	MARKTEC
DS03	Diode,LED,Ultrabright,Grn,5mm	QM49	7383/V7C3-ARTA/MS(STATIC)	MARKTEC
DS04	Diode,LED,Ultrabright,Grn,5mm	QM49	7383/V7C3-ARTA/MS(STATIC)	MARKTEC
E01	Terminal,PC Screw 10-32,30 Amp	HAC55	7787	KEYSTONE
E02	Terminal,PC Screw 10-32,30 Amp	HAC55	7787	KEYSTONE
E03	Terminal,PC Screw 10-32,30 Amp	HAC55	7787	KEYSTONE
E04	Terminal,PC Screw 10-32,30 Amp	HAC55	7787	KEYSTONE
E05	Terminal,PC Screw 10-32,30 Amp	HAC55	7787	KEYSTONE
E06	Terminal,PC Screw 10-32,30 Amp	HAC55	7787	KEYSTONE
E07	Terminal,PC Screw 10-32,30 Amp	HAC55	7787	KEYSTONE
E08	Terminal,PC Screw 10-32,30 Amp	HAC55	7787	KEYSTONE
E09	Terminal,PC Screw 10-32,30 Amp	HAC55	7787	KEYSTONE
E10	Terminal,PC Screw 10-32,30 Amp	HAC55	7787	KEYSTONE
F01	Fuse, 20A, 500Vdc, Non Time Delay, KLM	FA34	KLM-20	71400
F02	Fuse, 20A, 500Vdc, Non Time Delay, KLM	FA34	KLM-20	71400
F03	Fuse, 20A, 500Vdc, Non Time Delay, KLM	FA34	KLM-20	71400
F04	Fuse, 20A, 500Vdc, Non Time Delay, KLM	FA34	KLM-20	71400
J01	Conn,Edge Card,88 Contacts,Dual Row,30u Gold, M3	JN59	346-088-620-207	31781
J02	Conn,Edge Card,88 Contacts,Dual Row,30u Gold, M3	JN59	346-088-620-207	31781
J03	Conn,Edge Card,88 Contacts,Dual Row,30u Gold, M3	JN59	346-088-620-207	31781
J04	Conn,Edge Card,88 Contacts,Dual Row,30u Gold, M3	JN59	346-088-620-207	31781

Continued from previous page

NAPI95A/01 Power Module Interface PWB

REFDES	DESCRIPTION	NAUTEL #	VENDOR #	OEM CODE
J05	Conn, Socket, D-Sub, 25 pin, PWB Mt	JS13	K22-B25S-NJ	22421
J06	Conn, Plug, D-Sub, 25 pin, Vert PWB	JS43	627 025 220 017	31781
J07	MTA, Keyed Square Post HeaderAssy, 4 pin	JU25	647123-4	00779
J08	MTA, Keyed Square Post HeaderAssy, 4 pin	JU25	647123-4	00779
J09	MTA, Keyed Square Post HeaderAssy, 4 pin	JU25	647123-4	00779
J10	MTA, Keyed Square Post HeaderAssy, 4 pin	JU25	647123-4	00779
J11	JMT01 Pin Mod	206-5028	206-5028	37338
J12	JMT01 Pin Mod	206-5028	206-5028	37338
R01	Resistor, Film, 100K Ohms, 5%, 2W	RBP25	GS-3, 100K OHMS	75042
R02	Resistor, Film, 100K Ohms, 5%, 2W	RBP25	GS-3, 100K OHMS	75042
R03	Resistor, Film, 100K Ohms, 5%, 2W	RBP25	GS-3, 100K OHMS	75042
R04	Resistor, Film, 100K Ohms, 5%, 2W	RBP25	GS-3, 100K OHMS	75042
XF01	Fuse Clip, 13/32 Dia Fuse, PWB Mt	FC27	1A3400-09	71400
XF02	Fuse Clip, 13/32 Dia Fuse, PWB Mt	FC27	1A3400-09	71400
XF03	Fuse Clip, 13/32 Dia Fuse, PWB Mt	FC27	1A3400-09	71400
XF04	Fuse Clip, 13/32 Dia Fuse, PWB Mt	FC27	1A3400-09	71400

RF Drive Distribution PWB Assy

REFDES	DESCRIPTION	NAUTEL #	VENDOR #	OEM CODE
C001	Cap,SMT,Ceramic,0.1uF,10%,50V,X7R,0805	CCFS07	C0805C104K5RAC	31433
C002	Cap,SMT,Ceramic,0.1uF,10%,50V,X7R,0805	CCFS07	C0805C104K5RAC	31433
C003	Cap,SMT,Ceramic,0.1uF,10%,50V,X7R,0805	CCFS07	C0805C104K5RAC	31433
C004	Cap,SMT,Ceramic,0.1uF,10%,50V,X7R,0805	CCFS07	C0805C104K5RAC	31433
C005	Cap,SMT,Ceramic,0.1uF,10%,50V,X7R,0805	CCFS07	C0805C104K5RAC	31433
C006	Cap,SMT,Ceramic,0.1uF,10%,50V,X7R,0805	CCFS07	C0805C104K5RAC	31433
C007	Cap,SMT,Ceramic,0.1uF,10%,50V,X7R,0805	CCFS07	C0805C104K5RAC	31433
C008	Cap,SMT,Ceramic,0.1uF,10%,50V,X7R,0805	CCFS07	C0805C104K5RAC	31433
C009	Cap,SMT,Ceramic,0.1uF,10%,50V,X7R,0805	CCFS07	C0805C104K5RAC	31433
C010	Cap,SMT,Ceramic,0.1uF,10%,50V,X7R,0805	CCFS07	C0805C104K5RAC	31433
C011	Cap,SMT,Ceramic,0.1uF,10%,50V,X7R,0805	CCFS07	C0805C104K5RAC	31433
C012	Cap,SMT,Ceramic,0.1uF,10%,50V,X7R,0805	CCFS07	C0805C104K5RAC	31433
C013	Cap,SMT,Ceramic,1uF,10%,25V,,X7R,1206	CCFS10	C1206C105K3RAC	31433
C014	Cap,SMT,Ceramic,1uF,10%,25V,,X7R,1206	CCFS10	C1206C105K3RAC	31433
C015	Cap,SMT,Ceramic,1uF,10%,25V,,X7R,1206	CCFS10	C1206C105K3RAC	31433
C016	Cap,SMT,Ceramic,1uF,10%,25V,,X7R,1206	CCFS10	C1206C105K3RAC	31433
C017	Cap,SMT,Ceramic,1uF,10%,25V,,X7R,1206	CCFS10	C1206C105K3RAC	31433
C018	Cap,SMT,Ceramic,1uF,10%,25V,,X7R,1206	CCFS10	C1206C105K3RAC	31433
C019	Cap,SMT,Ceramic,1uF,10%,25V,,X7R,1206	CCFS10	C1206C105K3RAC	31433
C020	Cap,SMT,Ceramic,1uF,10%,25V,,X7R,1206	CCFS10	C1206C105K3RAC	31433
C021	Cap,SMT,Ceramic,1uF,10%,25V,,X7R,1206	CCFS10	C1206C105K3RAC	31433
C022	Cap,SMT,Ceramic,1uF,10%,25V,,X7R,1206	CCFS10	C1206C105K3RAC	31433
C023	Cap,SMT,Ceramic,1uF,10%,25V,,X7R,1206	CCFS10	C1206C105K3RAC	31433
C024	Cap,SMT,Ceramic,1uF,10%,25V,,X7R,1206	CCFS10	C1206C105K3RAC	31433
C025	Cap,SMT,Ceramic,0.1uF,10%,50V,X7R,0805	CCFS07	C0805C104K5RAC	31433
C026	Cap,SMT,Ceramic,0.1uF,10%,50V,X7R,0805	CCFS07	C0805C104K5RAC	31433
C027	Cap,SMT,Ceramic,0.1uF,10%,50V,X7R,0805	CCFS07	C0805C104K5RAC	31433
C028	Cap,SMT,Ceramic,0.1uF,10%,50V,X7R,0805	CCFS07	C0805C104K5RAC	31433
C029	Cap,SMT,Ceramic,0.1uF,10%,50V,X7R,0805	CCFS07	C0805C104K5RAC	31433
C030	Cap,SMT,Ceramic,0.1uF,10%,50V,X7R,0805	CCFS07	C0805C104K5RAC	31433
C031	Cap,SMT,Ceramic,0.1uF,10%,50V,X7R,0805	CCFS07	C0805C104K5RAC	31433
C032	Cap,SMT,Ceramic,0.1uF,10%,50V,X7R,0805	CCFS07	C0805C104K5RAC	31433
C033	Cap,SMT,Ceramic,0.1uF,10%,50V,X7R,0805	CCFS07	C0805C104K5RAC	31433
C034	Cap,SMT,Ceramic,0.1uF,10%,50V,X7R,0805	CCFS07	C0805C104K5RAC	31433
C035	Cap,SMT,Ceramic,0.1uF,10%,50V,X7R,0805	CCFS07	C0805C104K5RAC	31433
C036	Cap,SMT,Ceramic,0.1uF,10%,50V,X7R,0805	CCFS07	C0805C104K5RAC	31433
C037	Cap,SMT,Ceramic,1uF,10%,25V,,X7R,1206	CCFS10	C1206C105K3RAC	31433
C038	Cap,SMT,Ceramic,1uF,10%,25V,,X7R,1206	CCFS10	C1206C105K3RAC	31433
C039	Cap,SMT,Ceramic,1uF,10%,25V,,X7R,1206	CCFS10	C1206C105K3RAC	31433

Continued from previous page

NAPI98 RF Drive Distribution PWB Assy

REFDES	DESCRIPTION	NAUTEL #	VENDOR #	OEM CODE
C040	Cap,SMT,Ceramic,1uF,10%,25V,,X7R,1206	CCFS10	C1206C105K3RAC	31433
C041	Cap,SMT,Ceramic,1uF,10%,25V,,X7R,1206	CCFS10	C1206C105K3RAC	31433
C042	Cap,SMT,Ceramic,1uF,10%,25V,,X7R,1206	CCFS10	C1206C105K3RAC	31433
C043	Cap,SMT,Ceramic,1uF,10%,25V,,X7R,1206	CCFS10	C1206C105K3RAC	31433
C044	Cap,SMT,Ceramic,1uF,10%,25V,,X7R,1206	CCFS10	C1206C105K3RAC	31433
C045	Cap,SMT,Ceramic,1uF,10%,25V,,X7R,1206	CCFS10	C1206C105K3RAC	31433
C046	Cap,SMT,Ceramic,1uF,10%,25V,,X7R,1206	CCFS10	C1206C105K3RAC	31433
C047	Cap,SMT,Ceramic,1uF,10%,25V,,X7R,1206	CCFS10	C1206C105K3RAC	31433
C048	Cap,SMT,Ceramic,1uF,10%,25V,,X7R,1206	CCFS10	C1206C105K3RAC	31433
C049	Cap,SMT,Ceramic,1uF,10%,25V,,X7R,1206	CCFS10	C1206C105K3RAC	31433
C050	Cap,SMT,Ceramic,1uF,10%,25V,,X7R,1206	CCFS10	C1206C105K3RAC	31433
C051	Cap,SMT,Ceramic,1uF,10%,25V,,X7R,1206	CCFS10	C1206C105K3RAC	31433
C052	Cap,SMT,Ceramic,1uF,10%,25V,,X7R,1206	CCFS10	C1206C105K3RAC	31433
C053	Cap,SMT,Ceramic,1uF,10%,25V,,X7R,1206	CCFS10	C1206C105K3RAC	31433
C054	Cap,SMT,Ceramic,1uF,10%,25V,,X7R,1206	CCFS10	C1206C105K3RAC	31433
C055	Cap,SMT,Ceramic,1uF,10%,25V,,X7R,1206	CCFS10	C1206C105K3RAC	31433
C056	Cap,SMT,Ceramic,1uF,10%,25V,,X7R,1206	CCFS10	C1206C105K3RAC	31433
C057	Cap,SMT,Ceramic,1uF,10%,25V,,X7R,1206	CCFS10	C1206C105K3RAC	31433
C058	Cap,SMT,Ceramic,1uF,10%,25V,,X7R,1206	CCFS10	C1206C105K3RAC	31433
C059	Cap,SMT,Ceramic,1uF,10%,25V,,X7R,1206	CCFS10	C1206C105K3RAC	31433
C060	Cap,SMT,Ceramic,1uF,10%,25V,,X7R,1206	CCFS10	C1206C105K3RAC	31433
C061	Cap,SMT,Ceramic,0.1uF,10%,50V,X7R,0805	CCFS07	C0805C104K5RAC	31433
C062	Cap,SMT,Ceramic,0.1uF,10%,50V,X7R,0805	CCFS07	C0805C104K5RAC	31433
C063	Cap,SMT,Ceramic,0.1uF,10%,50V,X7R,0805	CCFS07	C0805C104K5RAC	31433
C064	Cap,SMT,Ceramic,0.1uF,10%,50V,X7R,0805	CCFS07	C0805C104K5RAC	31433
C065	Cap,SMT,Ceramic,0.1uF,10%,50V,X7R,0805	CCFS07	C0805C104K5RAC	31433
C066	Cap,SMT,Ceramic,0.1uF,10%,50V,X7R,0805	CCFS07	C0805C104K5RAC	31433
C067	Cap,SMT,Ceramic,0.1uF,10%,50V,X7R,0805	CCFS07	C0805C104K5RAC	31433
C068	Cap,SMT,Ceramic,0.1uF,10%,50V,X7R,0805	CCFS07	C0805C104K5RAC	31433
C069	Cap,SMT,Ceramic,0.1uF,10%,50V,X7R,0805	CCFS07	C0805C104K5RAC	31433
C070	Cap,SMT,Ceramic,0.1uF,10%,50V,X7R,0805	CCFS07	C0805C104K5RAC	31433
C071	Cap,SMT,Ceramic,0.1uF,10%,50V,X7R,0805	CCFS07	C0805C104K5RAC	31433
C072	Cap,SMT,Ceramic,0.1uF,10%,50V,X7R,0805	CCFS07	C0805C104K5RAC	31433
C073	Cap,SMT,Ceramic,0.1uF,10%,50V,X7R,0805	CCFS07	C0805C104K5RAC	31433
C074	Cap,SMT,Ceramic,0.1uF,10%,50V,X7R,0805	CCFS07	C0805C104K5RAC	31433
C075	Cap,SMT,Ceramic,0.1uF,10%,50V,X7R,0805	CCFS07	C0805C104K5RAC	31433
C076	Cap,SMT,Ceramic,0.1uF,10%,50V,X7R,0805	CCFS07	C0805C104K5RAC	31433
C077	Cap,SMT,Ceramic,0.1uF,10%,50V,X7R,0805	CCFS07	C0805C104K5RAC	31433
C078	Cap,SMT,Ceramic,0.1uF,10%,50V,X7R,0805	CCFS07	C0805C104K5RAC	31433

Continued from previous page

NAPI98

RF Drive Distribution PWB Assy

REFDES	DESCRIPTION	NAUTEL #	VENDOR #	OEM CODE
C079	Cap,SMT,Ceramic,0.1uF,10%,50V,X7R,0805	CCFS07	C0805C104K5RAC	31433
C080	Cap,SMT,Ceramic,0.1uF,10%,50V,X7R,0805	CCFS07	C0805C104K5RAC	31433
C081	Cap,SMT,Ceramic,0.1uF,10%,50V,X7R,0805	CCFS07	C0805C104K5RAC	31433
C082	Cap,SMT,Ceramic,0.1uF,10%,50V,X7R,0805	CCFS07	C0805C104K5RAC	31433
C083	Cap,SMT,Ceramic,0.1uF,10%,50V,X7R,0805	CCFS07	C0805C104K5RAC	31433
C084	Cap,SMT,Ceramic,0.1uF,10%,50V,X7R,0805	CCFS07	C0805C104K5RAC	31433
C085	Cap,SMT,Ceramic,1uF,10%,25V,,X7R,1206	CCFS10	C1206C105K3RAC	31433
C086	Cap,SMT,Ceramic,1uF,10%,25V,,X7R,1206	CCFS10	C1206C105K3RAC	31433
C087	Cap,SMT,Ceramic,1uF,10%,25V,,X7R,1206	CCFS10	C1206C105K3RAC	31433
C088	Cap,SMT,Ceramic,1uF,10%,25V,,X7R,1206	CCFS10	C1206C105K3RAC	31433
C089	Cap,SMT,Ceramic,1uF,10%,25V,,X7R,1206	CCFS10	C1206C105K3RAC	31433
C090	Cap,SMT,Ceramic,1uF,10%,25V,,X7R,1206	CCFS10	C1206C105K3RAC	31433
C091	Cap,SMT,Ceramic,1uF,10%,25V,,X7R,1206	CCFS10	C1206C105K3RAC	31433
C092	Cap,SMT,Ceramic,1uF,10%,25V,,X7R,1206	CCFS10	C1206C105K3RAC	31433
C093	Cap,SMT,Ceramic,1uF,10%,25V,,X7R,1206	CCFS10	C1206C105K3RAC	31433
C094	Cap,SMT,Ceramic,1uF,10%,25V,,X7R,1206	CCFS10	C1206C105K3RAC	31433
C095	Cap,SMT,Ceramic,1uF,10%,25V,,X7R,1206	CCFS10	C1206C105K3RAC	31433
C096	Cap,SMT,Ceramic,1uF,10%,25V,,X7R,1206	CCFS10	C1206C105K3RAC	31433
C097	Cap,SMT,Ceramic,0.1uF,10%,50V,X7R,0805	CCFS07	C0805C104K5RAC	31433
C098	Cap,SMT,Ceramic,0.1uF,10%,50V,X7R,0805	CCFS07	C0805C104K5RAC	31433
C099	Cap,SMT,Ceramic,1uF,10%,25V,,X7R,1206	CCFS10	C1206C105K3RAC	31433
C100	Cap,SMT,Ceramic,0.1uF,10%,50V,X7R,0805	CCFS07	C0805C104K5RAC	31433
C101	Cap,SMT,Ceramic,10uF,20%,6.3V,X5R,0805	CCFS57	C2012X5R0J106M	54583
C102	Cap,SMT,Ceramic,0.1uF,10%,50V,X7R,0805	CCFS07	C0805C104K5RAC	31433
C103	Cap,SMT,Ceramic,1uF,10%,25V,,X7R,1206	CCFS10	C1206C105K3RAC	31433
J01	Connector,Modular,2x4,RJ45,Jack	JT90	569262-1	AMP/TYCO
J02	Connector,Modular,2x4,RJ45,Jack	JT90	569262-1	AMP/TYCO
J03	Connector,Modular,2x4,RJ45,Jack	JT90	569262-1	AMP/TYCO
J04	Conn, Modular Jack, RJ45, Shld, Side, PWB, 50u	JM44	556591-1	09482
J05	Conn, Plug, D-Sub, 9 pin, PWBMt	JQ33	K22-E9P-NJ	31781
L01	Choke,SMT,Common Mode,2200 ohm,200mA,1206	LS22	DLW31SN222SQ2L(ROHS)	3EH09
L02	Choke,SMT,Common Mode,2200 ohm,200mA,1206	LS22	DLW31SN222SQ2L(ROHS)	3EH09
L03	Inductor, Choke, 2.5 Turns, JMtl	LA16	82-152-J	33062
R01	Resistor, SMT, MF, 82.5 Ohms,1% 1/4W	RAD12	RK73H2BL82R5F	59124
R02	Resistor,SMT,MF,0.0ohms,Jumper,0603	RFFS01	RK73Z1JLTD	59124
R03	Resistor, SMT, MF, 82.5 Ohms,1% 1/4W	RAD12	RK73H2BL82R5F	59124
R04	Resistor,SMT,MF,0.0ohms,Jumper,0603	RFFS01	RK73Z1JLTD	59124
R05	Resistor,SMT,MF,0.0ohms,Jumper,0603	RFFS01	RK73Z1JLTD	59124

Continued from previous page

NAPI98 RF Drive Distribution PWB Assy

REFDES	DESCRIPTION	NAUTEL #	VENDOR #	OEM CODE
R06	Resistor, SMT, MF, 82.5 Ohms,1% 1/4W	RAD12	RK73H2BL82R5F	59124
R07	Resistor,SMT,MF,0.0ohms,Jumper,0603	RFFS01	RK73Z1JLTD	59124
R08	Resistor, SMT, MF, 82.5 Ohms,1% 1/4W	RAD12	RK73H2BL82R5F	59124
R09	Resistor,SMT,MF,475ohms,1%,1/10W,0603	RFFS34	RK73H1JLTD4750F	59124
R10	Resistor,SMT,MF,475ohms,1%,1/10W,0603	RFFS34	RK73H1JLTD4750F	59124
R11	Resistor,SMT,MF,475ohms,1%,1/10W,0603	RFFS34	RK73H1JLTD4750F	59124
R12	Resistor,SMT,MF,475ohms,1%,1/10W,0603	RFFS34	RK73H1JLTD4750F	59124
TP01	Terminal, SMT, Test Point, PWB	HAJ66	TP-107-02-1-T(RoHS) COMPONENTS CORP	
TP02	Terminal, SMT, Test Point, PWB	HAJ66	TP-107-02-1-T(RoHS) COMPONENTS CORP	
U01	IC,SMT,Quad RS-422 DIFF LineDriver	UD66	DS26C31T/DS26C31M (STATIC)	NATIONAL
U02	IC,SMT,Quad RS-422 DIFF LineDriver	UD66	DS26C31T/DS26C31M (STATIC)	NATIONAL
U03	IC,SMT,Quad RS-422 DIFF LineDriver	UD66	DS26C31T/DS26C31M (STATIC)	NATIONAL
U04	IC,SMT,Quad RS-422 DIFF LineDriver	UD66	DS26C31T/DS26C31M (STATIC)	NATIONAL
U05	IC,SMT,Quad RS-422 DIFF LineDriver	UD66	DS26C31T/DS26C31M (STATIC)	NATIONAL
U06	IC,SMT,Quad RS-422 DIFF LineDriver	UD66	DS26C31T/DS26C31M (STATIC)	NATIONAL
U07	IC,SMT,Quad RS-422 DIFF LineDriver	UD66	DS26C31T/DS26C31M (STATIC)	NATIONAL
U08	IC,SMT,Quad RS-422 DIFF LineDriver	UD66	DS26C31T/DS26C31M (STATIC)	NATIONAL
U09	IC,SMT,Quad RS-422 DIFF LineDriver	UD66	DS26C31T/DS26C31M (STATIC)	NATIONAL
U10	IC,SMT,Quad RS-422 DIFF LineDriver	UD66	DS26C31T/DS26C31M (STATIC)	NATIONAL
U11	IC,SMT,Quad RS-422 DIFF LineDriver	UD66	DS26C31T/DS26C31M (STATIC)	NATIONAL
U12	IC,SMT,Quad RS-422 DIFF LineDriver	UD66	DS26C31T/DS26C31M (STATIC)	NATIONAL
U13	IC,SMT,Quad RS-422 DIFF LineDriver	UD66	DS26C31T/DS26C31M (STATIC)	NATIONAL
U14	IC,SMT,Quad RS-422 DIFF LineDriver	UD66	DS26C31T/DS26C31M (STATIC)	NATIONAL
U15	IC,SMT,Quad RS-422 DIFF LineDriver	UD66	DS26C31T/DS26C31M (STATIC)	NATIONAL
U16	IC,SMT,Quad RS-422 DIFF LineDriver	UD66	DS26C31T/DS26C31M (STATIC)	NATIONAL
U17	IC,SMT,Quad RS-422 DIFF LineDriver	UD66	DS26C31T/DS26C31M (STATIC)	NATIONAL
U18	IC,SMT,Quad RS-422 DIFF LineDriver	UD66	DS26C31T/DS26C31M (STATIC)	NATIONAL
U19	IC,SMT,Quad RS-422 DIFF LineDriver	UD66	DS26C31T/DS26C31M (STATIC)	NATIONAL

Continued from previous page

NAPI98 RF Drive Distribution PWB Assy

REFDES	DESCRIPTION	NAUTEL #	VENDOR #	OEM CODE
U20	IC,SMT,Quad RS-422 DIFF LineDriver	UD66	DS26C31T/DS26C31M (STATIC)	NATIONAL
U21	IC,SMT,Quad RS-422 DIFF LineDriver	UD66	DS26C31T/DS26C31M (STATIC)	NATIONAL
U22	IC,SMT,Quad RS-422 DIFF LineDriver	UD66	DS26C31T/DS26C31M (STATIC)	NATIONAL
U23	IC,SMT,Quad RS-422 DIFF LineDriver	UD66	DS26C31T/DS26C31M (STATIC)	NATIONAL
U24	IC,SMT,Quad RS-422 DIFF LineDriver	UD66	DS26C31T/DS26C31M (STATIC)	NATIONAL
U25	IC,SMT,Clock Driver,1-TO-10,Fast CMOS,SOIC,.3"	UD72	IDT74FCT807CTS0(STATIC)(ROHS)	IDT
U26	IC,SMT,Clock Driver,1-TO-10,Fast CMOS,SOIC,.3"	UD72	IDT74FCT807CTS0(STATIC)(ROHS)	IDT
U27	IC,SMT,Clock Driver,1-TO-10,Fast CMOS,SOIC,.3"	UD72	IDT74FCT807CTS0(STATIC)(ROHS)	IDT
U28	IC,SMT,Clock Driver,1-TO-10,Fast CMOS,SOIC,.3"	UD72	IDT74FCT807CTS0(STATIC)(ROHS)	IDT
U29	IC,SMT,Clock Driver,1-TO-10,Fast CMOS,SOIC,.3"	UD72	IDT74FCT807CTS0(STATIC)(ROHS)	IDT
U30	IC,SMT,Clock Driver,1-TO-10,Fast CMOS,SOIC,.3"	UD72	IDT74FCT807CTS0(STATIC)(ROHS)	IDT
U31	IC,SMT,Quad RS-422 Receiver,16-SOIC	UT91	DS26C32ATM(STATIC)	NATIONAL

REFDES	DESCRIPTION	NAUTEL #	VENDOR #	OEM CODE
C01	Capacitor, Mica, Dipped, 9100pF 2% 500V	CB06	CM07FD912G03	14655
C02	Capacitor, Mica, Dipped, 9100pF 2% 500V	CB06	CM07FD912G03	14655
C03	Capacitor, Mica, Dipped, 9100pF 2% 500V	CB06	CM07FD912G03	14655
C04	Capacitor, Mica, Dipped, 9100pF 2% 500V	CB06	CM07FD912G03	14655
C05	Capacitor, Mica, Dipped, 9100pF 2% 500V	CB06	CM07FD912G03	14655
C06	Not Used	-	NOT USED	37338
C07	Not Used	-	NOT USED	37338
C08	Not Used	-	NOT USED	37338
C09	Not Used	-	NOT USED	37338
C10	Not Used	-	NOT USED	37338
C11	Not Used	-	NOT USED	37338
C12	Not Used	-	NOT USED	37338
C13	Capacitor, Ceramic, 0.1uF 10%100V	CCG07	CKR06BX104KRV	56289
C14	Capacitor, Ceramic, 0.1uF 10%100V	CCG07	CKR06BX104KRV	56289
C15	Capacitor, Ceramic, 0.1uF 10%100V	CCG07	CKR06BX104KRV	56289
C16	Capacitor, Ceramic, 0.1uF 10%100V	CCG07	CKR06BX104KRV	56289
C17	Capacitor, Ceramic, 0.1uF 10%100V	CCG07	CKR06BX104KRV	56289
C18	Capacitor, Ceramic, 0.1uF 10%100V	CCG07	CKR06BX104KRV	56289
C19	Capacitor, Ceramic, 0.1uF 10%100V	CCG07	CKR06BX104KRV	56289
C20	Capacitor, Ceramic, 0.1uF 10%100V	CCG07	CKR06BX104KRV	56289
C21	Capacitor, Ceramic, 0.1uF 10%100V	CCG07	CKR06BX104KRV	56289
C22	Capacitor, Ceramic, 1.0uF 100V	CAP16	RPE114Z5U105M100V	91929
C23	Capacitor, Tantalum, Dipped, 10uF, 35V	CCP36	T351G106K035AT(RoHS) KEMET	96095
C24	Capacitor, Ceramic, 0.1uF 10%100V	CCG07	CKR06BX104KRV	56289
C25	Capacitor, Ceramic, 1.0uF 100V	CAP16	RPE114Z5U105M100V	91929
C26	Capacitor, Tantalum, Dipped, 10uF, 35V	CCP36	T351G106K035AT(RoHS) KEMET	96095
CR01	Not Used	-	NOT USED	37338
CR02	Not Used	-	NOT USED	37338
J01	Conn, BNC, Recept, Rt Angle, PWB Mt	JS21	R141665161	0GP12
J02	Conn, BNC, Recept, Rt Angle, PWB Mt	JS21	R141665161	0GP12
J03	Conn, Socket, D-Sub, 9 pin, PWB Mt	JQ34	K22-E9S-NJ	KYCON
L01	Inductor, Choke, 2.5 Turns, JMtl	LA16	82-152-J	33062
L02	Inductor, Choke, 2.5 Turns, JMtl	LA16	82-152-J	33062
R01	Resistor, Film, 47 Ohms, 5% 2W	RBP05	GS-3, 47 OHMS	75042
R02	Resistor, Film, 47 Ohms, 5% 2W	RBP05	GS-3, 47 OHMS	75042
R03	Resistor, Film, 47 Ohms, 5% 2W	RBP05	GS-3, 47 OHMS	75042
R04	Resistor, Film, 47 Ohms, 5% 2W	RBP05	GS-3, 47 OHMS	75042

Continued from previous page

NAPP10/01 Directional Coupler PWB Assy,NX50

REFDES	DESCRIPTION	NAUTEL #	VENDOR #	OEM CODE
R05	Resistor, Film, 100 Ohms, 5%2W	RBP07	GS-3, 100 OHMS	75042
R06	Resistor, Film, 220 Ohms, 5%,2W	RK31	GS-3, 220 OHMS	75042
R07	Resistor, Film, 330 Ohms, 2PC1/2W	RAP07	RL20S331G DALE	35005
R08	Resistor, Film, 680 Ohms, 2PC1/2W	RC35	RL20S681G	35005
R09	Resistor, Film, 1000 Ohms, 2PC 1/2W	RAP09	RL20S102G	35005
R10	Resistor, Film, 2200 Ohms, 2PC 1/2W	RC41	RL20S222G	35005
R11	Resistor, Film, 470 Ohms, 2PC1/2W	RC33	RL20S471G	35005
R12	Resistor, Film, 220 Ohms, 2PC1/2W	RC29	RL20S221G	35005
R13	Resistor, MF, 1.50K Ohms, 1PC1/4W	RAB27	MF1/4DL1501F	59124
R14	Resistor, MF, 562 Ohms, 1PC 1/4W	RAB22	MF1/4DL5620F	59124
R15	Resistor, Film, 47 Ohms, 5% 2W	RBP05	GS-3, 47 OHMS	75042
R16	Resistor, Film, 470 Ohms, 2PC1/2W	RC33	RL20S471G	35005
R17	Resistor, Film, 220 Ohms, 2PC1/2W	RC29	RL20S221G	35005
R18	Resistor, MF, 1.50K Ohms, 1PC1/4W	RAB27	MF1/4DL1501F	59124
R19	Not Used	-	NOT USED	37338
R20	Resistor, Film, 47 Ohms, 5% 2W	RBP05	GS-3, 47 OHMS	75042
S01	Switch, 8-Position, Piano, DIP, 1PST	SD28	76PSB08	81073
U01	IC,Amplifier,35MHz,CurrentFeedback,1.1A	UT88	LT1210CT7(STATIC)	64155
U02	IC,Amplifier,35MHz,CurrentFeedback,1.1A	UT88	LT1210CT7(STATIC)	64155

Final Assy, NX50, RLS 5

REFDES	DESCRIPTION	NAUTEL #	VENDOR #	OEM CODE
A01	Back Plane, RF Combiner(TOP < --)	NAH57C/01	207-6050-13	37338
A02	Back Plane, RF Combiner(TOP < --)	NAH57C/01	207-6050-13	37338
A03	Back Plane, RF Combiner(TOP < --)	NAH57C/01	207-6050-13	37338
A04	Back Plane, RF Combiner(TOP < --)	NAH57C/01	207-6050-13	37338
A05	Back Plane, RF Combiner(TOP < --)	NAH57C/01	207-6050-13	37338
A06	Rack Interface PWB Assy	NAPI152A	207-4030-01	37338
A07	RF Drive Distribution PWB Assy	NAPI98	207-4050	37338
A08	PDM Drive Distribution PWB	NAPI154	207-4065	37338
A09	B+ Distribution Assy	NAX243A	207-7040-01	37338
A10	Not Used	-	NOT USED	37338
A11	Control/Exciter Panel Assy.NX25-NX100	NAE96C/01	207-3000-06	37338
A12	Not Used	-	NOT USED	37338
A13	Not Used	-	NOT USED	37338
A14	Not Used	-	NOT USED	37338
A15	RF Power Module Assy,NX Series	NAP39A	207-1100-01	37338
A16	RF Power Module Assy,NX Series	NAP39A	207-1100-01	37338
A17	RF Power Module Assy,NX Series	NAP39A	207-1100-01	37338
A18	RF Power Module Assy,NX Series	NAP39A	207-1100-01	37338
A19	RF Power Module Assy,NX Series	NAP39A	207-1100-01	37338
A20	RF Power Module Assy,NX Series	NAP39A	207-1100-01	37338
A21	RF Power Module Assy,NX Series	NAP39A	207-1100-01	37338
A22	RF Power Module Assy,NX Series	NAP39A	207-1100-01	37338
A23	RF Power Module Assy,NX Series	NAP39A	207-1100-01	37338
A24	RF Power Module Assy,NX Series	NAP39A	207-1100-01	37338
A25	RF Power Module Assy,NX Series	NAP39A	207-1100-01	37338
A26	RF Power Module Assy,NX Series	NAP39A	207-1100-01	37338
A27	RF Power Module Assy,NX Series	NAP39A	207-1100-01	37338
A28	RF Power Module Assy,NX Series	NAP39A	207-1100-01	37338
A29	RF Power Module Assy,NX Series	NAP39A	207-1100-01	37338
A30	RF Power Module Assy,NX Series	NAP39A	207-1100-01	37338
A31	RF Power Module Assy,NX Series	NAP39A	207-1100-01	37338
A32	RF Power Module Assy,NX Series	NAP39A	207-1100-01	37338
A33	RF Power Module Assy,NX Series	NAP39A	207-1100-01	37338
A34	RF Power Module Assy,NX Series	NAP39A	207-1100-01	37338
A35	NX Fan Tray Assy	207-8133	207-8133	37338
A36	NX Fan Tray Assy	207-8133	207-8133	37338
A37	NX Fan Tray Assy	207-8133	207-8133	37338
A38	NX Fan Tray Assy	207-8133	207-8133	37338
A39	NX Fan Tray Assy	207-8133	207-8133	37338

Continued from previous page

NARA53D Final Assy, NX50, RLS 5

REFDES	DESCRIPTION	NAUTEL #	VENDOR #	OEM CODE
A40	Control Door Assy-NX Series	207-2010-06	207-2010-06	37338
A41	Voltage Probe Assy, NX50	207-6111-01	207-6111-01	37338
A42	DO NOT USE - SEE NOTESCurrent Probe-NX25, 50,100,200	207-6213-04	207-6213-04	37338
A43	Directional Coupler (FWD/REFLPWR) for NX50	NAFP106B/01	207-6214-09	37338
A44	Static Drain Choke Winding Detail Assy	183-6059	183-6059	37338
A45	Not Used	-	NOT USED	37338
A46	Capacitor Assy-NX50 RLS 3 & 4	207-7120-04	207-7120-04	37338
A46R1	Resistor,Cap Discharge,27Komhs5%,13W	RC44	UP10SR-27K-J	4TKQ5
A46R2	Resistor,Cap Discharge,27Komhs5%,13W	RC44	UP10SR-27K-J	4TKQ5
A46R3	Resistor,Cap Discharge,27Komhs5%,13W	RC44	UP10SR-27K-J	4TKQ5
A46R4	Resistor,Cap Discharge,27Komhs5%,13W	RC44	UP10SR-27K-J	4TKQ5
A46R5	Resistor,Cap Discharge,27Komhs5%,13W	RC44	UP10SR-27K-J	4TKQ5
A46R6	Resistor,Cap Discharge,27Komhs5%,13W	RC44	UP10SR-27K-J	4TKQ5
A47	Arc Detector Assy	215-8060-01	215-8060-01	37338
A47U2	Sensor, Flame UV photo tube,for UB88	UB89	R9454	OJXJ4
A48	25/50KW Rectifier Assy	207-7055-05	207-7055-05	37338
A49	See Sales Order	%	% SEE SALES ORDER	37338
C01	Capacitor, Ceramic, 50pF +10%15000V	CCG42	T500K99COGW8570	56699
C13	See Master Work Order	*	* SEE MASTER WORK ORDER	37338
C14	See Master Work Order	*	* SEE MASTER WORK ORDER	37338
C15	See Master Work Order	*	* SEE MASTER WORK ORDER	37338
C16	See Master Work Order	*	* SEE MASTER WORK ORDER	37338
C17	See Master Work Order	*	* SEE MASTER WORK ORDER	37338
C18	See Master Work Order	*	* SEE MASTER WORK ORDER	37338
C19	See Master Work Order	*	* SEE MASTER WORK ORDER	37338
C20	See Master Work Order	*	* SEE MASTER WORK ORDER	37338
C21	See Master Work Order	*	* SEE MASTER WORK ORDER	37338
C22	See Master Work Order	*	* SEE MASTER WORK ORDER	37338
C23	See Master Work Order	*	* SEE MASTER WORK ORDER	37338
C24	See Master Work Order	*	* SEE MASTER WORK ORDER	37338
C25	See Master Work Order	*	* SEE MASTER WORK ORDER	37338

Continued from previous page

NARA53D Final Assy, NX50, RLS 5

REFDES	DESCRIPTION	NAUTEL #	VENDOR #	OEM CODE
C26	See Master Work Order	*	* SEE MASTER WORK ORDER	37338
C27	See Master Work Order	*	* SEE MASTER WORK ORDER	37338
C28	See Master Work Order	*	* SEE MASTER WORK ORDER	37338
C29	See Master Work Order	*	* SEE MASTER WORK ORDER	37338
C30	See Master Work Order	*	* SEE MASTER WORK ORDER	37338
C31	See Master Work Order	*	* SEE MASTER WORK ORDER	37338
C32	See Master Work Order	*	* SEE MASTER WORK ORDER	37338
C33	See Master Work Order	*	* SEE MASTER WORK ORDER	37338
L01	Inductor, Choke, 8 mH 60A	TF44A	EC207074s Rev A	
L02	Inductor, Choke, 8 mH 60A	TF44A	EC207074s Rev A	
L03	Inductor, Choke, 8 mH 60A	TF44A	EC207074s Rev A	
L04	Inductor, Choke, 8 mH 60A	TF44A	EC207074s Rev A	
L07	L1 Coil Detail Assy	207-6182	207-6182	37338
L08	L2 Coil Detail Assy	207-6132	207-6132	37338
L09	L3 Coil Detail Assy	207-6138	207-6138	37338
T01	See Sales Order	%	% SEE SALES ORDER	37338
U01	Not Used	-	NOT USED	37338
U02	Current Sensor, Hall, 400 amp	UC59	HCTF400V4B15	1AA44
U03	Power Supply.15V,1500W,Univ.Input, PFC, Rem ON/OFF	UG53	RSP-1500-15	SL575
U04	Power Supply.15V,1500W,Univ.Input, PFC, Rem ON/OFF	UG53	RSP-1500-15	SL575
U05	Power Supply,48V,480W,Univ.Input,PFC, Rem ON/OFF	UG54	SP-480-48	SL575
U06	Power Supply,48V,480W,Univ.Input,PFC, Rem ON/OFF	UG54	SP-480-48	SL575
U07	Power Supply, 12V@200W, 85-264VAC, PFC	UG57	SP-200-12	S8116
U08	Surge Arrestor, 5000VDC 10%	UM51	GXH50	1C532

NAX243A B+ Distribution Assy

REFDES	DESCRIPTION	NAUTEL #	VENDOR #	OEM CODE
F01	Fuse, 70A, 600V, Class J, OpenIndicator	FD24	AJT70	3WCG0
F02	Fuse, 70A, 600V, Class J, OpenIndicator	FD24	AJT70	3WCG0
F03	Fuse, 70A, 600V, Class J, OpenIndicator	FD24	AJT70	3WCG0
F04	Fuse, 70A, 600V, Class J, OpenIndicator	FD24	AJT70	3WCG0
F05	Fuse, 70A, 600V, Class J, OpenIndicator	FD24	AJT70	3WCG0
J01	Conn, Coax, BNC, Recept, 50ohm	JDP26	UG1094/U	02660
R01	Resistor, Film, 470K Ohms, 2PC 1/2W	RD27	RL20S474G	35005
R02	Resistor, Film, 470K Ohms, 2PC 1/2W	RD27	RL20S474G	35005
R03	Resistor, Film, 68K Ohms, 2PC1/2W	RD17	RL20S683G	35005
R04	Resistor, Film, 68K Ohms, 2PC1/2W	RD17	RL20S683G	35005

Section 4: Wiring/connector lists

This section contains the wiring information for the hard-wired assemblies of the transmitter, and applicable connector mating information.

Wiring lists provided

Wiring lists are provided in tabular format. Table 4.1 on page 4-2 lists the tables containing wiring information. These tables provide non-printed wiring pattern, point-to-point (source and destination) interconnection information.

Wiring lists not provided

Separate wiring lists are not provided for some assemblies, including:

- Assemblies that have a separate maintenance manual. Refer to the appropriate maintenance manual for detailed wiring information for these assemblies, if provided.
- Assemblies that have their wiring information shown in tables on their assembly detail drawing(s). Refer to the *Mechanical Drawings* section of this manual for detailed wiring information for these assemblies.

Connector mating information

Where applicable, a connector mating table is provided after the corresponding wiring list. Table 4.2 on page 4-2 identifies all provided connector information.

Wire colours

Every effort is made to manufacture assemblies using the wire colour shown in the **Color** column of the wiring list tables. Sometimes, a white wire will be substituted for the listed colour. In such cases, wires must be identified by their assigned numbers.

Printed wiring board patterns

Printed wiring pattern information for printed wiring boards (PWBs) is beyond the scope of this manual, and therefore not provided.

Table 4.1: Wiring Lists Provided

Table #	Description
Table 4.3	NX50 Transmitter - Wiring List (page 4-2)
Table 4.5	Fan Tray Assembly (Nautel Part # 207-8133) - Wiring List, (page 4-11)

Table 4.2: Connector Mating Information Provided

Table #	Description
Table 4.4	NX50 Transmitter - Connecting Mating Information (page 4-8)

Table 4.3: NX50 Transmitter - Wiring List

Source	Destination	Wire #	Color	Size	Remarks
A9E1	A1A1E1	1	Black	6	
A9E2	A2A1E1	2	Black	6	
A9E3	A3A1E1	3	Black	6	
A9E4	A4A1E1	4	Black	6	
A9E5	A5A1E1	5	Black	6	
A48U1-B(-)	A1A1E2	6	Black	6	
A48U1-B(-)	A2A1E2	7	Black	6	
A48U1-B(-)	A3A1E2	8	Black	6	
A48U1-B(-)	A4A1E2	9	Black	6	
A48U1-B(-)	A5A1E2	10	Black	6	
A1A1E1	A46C1-(+)	11	White	10	
A2A1E1	A46C2-(+)	12	White	10	
A3A1E1	A46C3-(+)	13	White	10	
A4A1E1	A46C4-(+)	14	White	10	
A5A1E1	A46C5-(+)	15	White	10	
A46C6-(+)	A46C5-(+)	-	White	10	
A1A1E2	A46C1-(-)	16	Black	10	
A2A1E2	A46C2-(-)	17	Black	10	
A3A1E2	A46C3-(-)	18	Black	10	
A4A1E2	A46C4-(-)	19	Black	10	
A5A1E2	A46C5-(-)	20	Black	10	

Table 4.3: NX50 Transmitter - Wiring List

Source	Destination	Wire #	Color	Size	Remarks
A46C6-(-)	A46C5-(-)	-	Black	10	
A46U8-(AC1)	A46C1-(+)	26	White	14	
A46U8-(AC2)	A46C2-(+)	27	White	14	
A46U9-(AC1)	A46C3-(+)	28	White	14	
A46U9-(AC2)	A46C4-(+)	29	White	14	
A46C6-(+)	A46U10-(AC1)	30	White	14	
A46U8-(+)	A46K1-1	31	White	14	
A46U9-(+)	A46K1-1	32	White	14	
A46U10-(+)	A46K1-1	33	White	14	
A46R7-2	A46K1-2	-	Yellow	14	
P01-01 P06-0	1	101	White	22	
P01-02	GND near A39	102	Black	22	
P01-03	P07-24	103	White	22	
P01-04	P06-02	104	White	22	
P01-05	GND near A39	105	Black	22	
P01-06	P07-11	106	White	22	
P02-01 P06-0	4	107	White	22	
P02-02	GND near A39	108	Black	22	
P02-03	P07-23	109	White	22	
P02-04	P06-05	110	White	22	
P02-05	GND near A39	111	Black	22	
P02-06	P07-10	112	White	22	
P03-01	P06-07	113	White	22	
P03-02	GND near A39	114	Black	22	
P03-03	P06-25	115	White	22	
P03-04	P06-08	116	White	22	
P03-05	GND near A39	117	Black	22	
P03-06	P06-12	118	White	22	
P04-01 P07-0	1	119	White	22	
P04-02	GND near A39	120	Black	22	
P04-03	P06-24	121	White	22	
P04-04	P07-02	122	White	22	
P04-05	GND near A39	123	Black	22	
P04-06	P06-11	124	White	22	
P05-01 P07-0	4	125	White	22	
P05-02	GND near A39	126	Black	22	
P05-03	P06-23	127	White	22	

Table 4.3: NX50 Transmitter - Wiring List

Source	Destination	Wire #	Color	Size	Remarks
P05-04	P07-05	128	White	22	
P05-05	GND near A39	129	Black	22	
P05-06	P06-10	130	White	22	
P08-01	P14-01	131	Black	20	
P08-02	P14-02	132	White	20	
P08-03	P14-03	133	White	20	
P08-04	P14-04	134	Black	20	
P08-05	P14-05	135	White	22	
P08-06	P14-06	136	White	22	
P08-07	P14-07	137	Black	20	
P08-08	P14-08	138	White	20	
P08-09	P14-09	139	Black	20	
P08-10	P14-10	140	Centre	22	1-Conductor shielded
P08-23	P14-23	140	Shield	-	
P08-12	P14-12	141A	White	22	2-Conductor shielded
P08-24	P14-24	141B	Black	22	
P08-25	P14-25	141	Shield	-	
P08-14	P14-14	143	Black	22	
P08-15	P14-15	144	White	20	
P08-16	P14-16	145	White	20	
P08-18	P14-18	146	White	22	
P08-19	P14-19	147	White	22	
P08-21	P14-21	148	White	22	
P09-01	A48U1TB1-1	149	White	22	
P09-02	A48U1TB1-5	150	White	22	
P09-03	A48U1TB3-8	151	Black	22	
P09-08	P16-04	154	Black	24	
P09-10	P16-01	155	White	24	
P09-11	A48U1TB3-10	156	White	22	
P09-12	P28 (CENTER)	157	Centre	22	1-Conductor shielded
P09-25	P28 (BODY)	157	Shield	-	
P09-14	A48U1TB2-1	158	Black	22	
P09-15	A48U1TB2-2	159	Black	22	
P09-16	A48U1TB3-3	160	White	22	
P09-17	A48U1TB3-16	161	Centre	22	1-Conductor shielded
P09-04	A48U1TB3-17	161	Shield	-	
P09-18	A48U1TB1-8	162	Centre	22	1-Conductor shielded

Table 4.3: NX50 Transmitter - Wiring List

Source	Destination	Wire #	Color	Size	Remarks
P09-06	A48U1TB2-3	162	Shield	-	
P09-19	A48U1TB1-4	163	Centre	22	1-Conductor shielded
P09-05	A48U1TB2-3	163	Shield	-	
P09-20	A48U1TB3-5	164	White	22	
P09-21	P16-03	165	White	24	
P09-23	P16-02	166	White	24	
P09-24	A48U1TB3-8	167	Black	22	
P10-01	P15-01	168	White	20	
P10-05	P15-05	169	White	22	
P10-06	P15-06	170	Black	20	
P11-01	U5-(V-)	171	Black	20	
P11-02	U5-(V-)	172	Black	20	
P11-03	U5-(V+)	173	White	20	
P11-06	P26-03	174	White	22	
P11-07	P22-02	175	White	22	
P11-08	P19-02	176	White	22	
P11-09	P25-04	177	White	22	
P11-10	P26-04	178	White	22	
P11-11	A46K1-AUX-C	179	White	22	
P11-12	A46U1TB3-6	180	White	22	
P11-14	U6-(V-)	181	Black	20	
P11-15	U6-(V-)	182	Black	20	
P11-16	U5-(V+)	183	White	20	
P11-17	U6-(V+)	184	White	20	
P11-18	P18-03	185	Centre	24	Coax shielded
P11-20	P18-01	-	Shield	-	
P11-21	P18-02	186	Centre	24	Coax shielded
P11-25	P18-01	-	Shield	-	
P11-23	P19-01	187	Black	22	
P11-24	P22-01	188	Black	22	
P12-01	U3-(V+)	189	White	10	
P12-02	U3-(V-)	190	Black	10	
P13-01	U4-(V+)	191	White	10	
P13-02	U4-(V-)	192	Black	10	
P17-01	P27-04	193	White	24	Coax,50 Ohms RG188A/U”
P17-06	P27-01	193	Shield	-	
P17-03	P23-Centre	194	Centre	24	Coax,50 Ohms RG188A/U”

Table 4.3: NX50 Transmitter - Wiring List

Source	Destination	Wire #	Color	Size	Remarks
P17-08	P23-Core	194	Shield	-	
P17-04	P24-Centre	195	Centre	24	Coax,50 Ohms RG188A/U”
P17-09	P24-Core	195	Shield	-	
P17-02	P27-02	196	White	22	
P17-05	P27-06	197	White	22	
P17-07	P27-05	198	White	24	Coax,50 Ohms RG188A/U”
P17-06	P27-08	198	Shield	-	
E3	T1XF1-2	202	White	14	XF1-2, COM Fuse (L)”
E4	T1XF1-4	203	White	14	XF1-4, LINE Fuse (R)”
U3-L	T1XF1-2	204	White	14	
U3-N	T1XF1-4	205	White	14	
U3-G	GND near U3	206	Black	14	
U3-L	U4-L	207	White	14	
U3-N	U4-N	208	White	14	
U3-G	U4-G	209	Black 14		
U6-L	T1XF1-2	210	White	14	
U6-N	T1XF1-4	211	White	14	
U6-G	U4-G	212	Black 14		
U6-L	U5-L	213	White	14	
U6-N	U5-N	214	White	14	
U6-G	U5-G	215	Black 14		
U7-L	U5-L	216	White	14	
U7-N	U5-N	217	White	14	
U7-G	U5-G	218	Black 14		
GND Near A39	GND Near U3	219	Black	14	
U7-(V+)	P30-04	220	White	18	
U7-(V-)	P30-01	221	Black	18	
U7-(V+)	E1-A	222	White	18	
U7-(V-)	E2-A	223	Black	18	
U7-(V-)	GND Near U3	224	Black	18	
P11-04	U6-(V+)	225	White	20	
P11-05	P25-03	226	White	22	
U7-L	A46K1-TB1-1	227	White	14	
U7-N	A46K1-TB1-2	228	White	14	
A48U1TB3-4	A46K1-AUX-NO	229	White	22	
P33-6 A1	1A1TB1-11	231	Centre	24	Coax,50 Ohms RG188A/U”
P33-8	A11A1TB1-12	231	Shield	-	

Table 4.3: NX50 Transmitter - Wiring List

Source	Destination	Wire #	Color	Size	Remarks
Line 1-2	P35-1	232	Red	14	
Line 2-2	P35-2	233	Brown	14	
Line 3-2	P35-3	234	Gray	14	
GND Near A48	P35-4	235	Grn/Ylw	14	
U3-(V+)	U4-(V+)	236	Black	8	
U3-(V-)	U4-(V-)	237	Black	8	
U4-(V-)	GND near U3	238	Black	8	
A44-B	GND near A44	239	Yellow	14	
A44-A	RF OUT STUD	240	Yellow	14	
A43C1-Top	RF OUT STUD	241	Yellow	14	
T1-GND	GND near L4	242	Black	6	
U8E1	E5	243	Yellow	18	
L1-1	A48U1- B(+)	300	Black	2	
L1-1	L2-1	-	Black	2	
L1-2	L2-2	-	Black	2	
L3-1	A48U1- B(+)	301	Black	2	
L3-1	L4-1	-	Black	2	
L3-2	L4-2	-	Black	2	
L1-2	A9E12	302	Black	2	
L3-2	A9E13	303	Black	2	
A48U1-B(-)	GND near U1	-	Grn/Ylw	2	
RF OUT GND	STA-GND	304	Grn/Ylw	2	
W65P1-(+)	E1-B	-	Blk/Ws	18	
W65P1-(-)	E2-B	-	Black	18	
W61P1	W61P2	-	-	-	
W62P1	W62P2	-	-	-	
W64P1	W64P2	-	-	-	
W66P1-Pin	W66P2-Socket	-	-	-	
W67P1-Pin	W67P2-Socket	-	-	-	
W69P1-PIN	W69P2-Socket	-	-	-	
W70P1-PIN	W70P2-Socket	-	-	-	
T1-LOAD1	T1A1XF1-1	400	White	12	
T1-LOAD0	T1A1XF1-3	401	White	12	
T1A1U1-2	T1A1XF1-1	402	White	14	
T1A1U2-2	T1-LOAD2	403	White	14	
T1A1U3-2	T1-LOAD3	404	White	14	
T1-LOAD1	A48U1-AC1		Black	2	

Table 4.3: NX50 Transmitter - Wiring List

Source	Destination	Wire #	Color	Size	Remarks
T1-LOAD2	A48U1-AC2		Black	2	
T1-LOAD3	A48U1-AC3		Black	2	
A45U1-2	A45XF1-1	-	White	14	
A45U2-2	T1-LOAD2	-	White	14	
A45U3-2	T1-LOAD3	-	White	14	
T1-LINE1	Line 1-2	-	Black	1/0	
T1-LINE1	Line 1-2	-	Black	1/0	
T1-LINE2	Line 2-2	-	Black	1/0	
T1-LINE2	Line 2-2	-	Black	1/0	
T1-LINE3	Line 3-2	-	Black	1/0	
T1-LINE3	Line 3-2	-	Black	1/0	
Fr Door GND	GND 1	-	Braid	14	
Rr Door GND	GND 2	-	Braid	14	
Ex Door GND	GND 3	-	Braid	14	

Table 4.4: NX50 Transmitter - Connector Mating Information

Connector	Mate	Note
A41E1	C1E1	Voltage probe
E1	E1	Butt splice
E2	E2	Butt splice
E3	A6E1	
E4	A6E2	
P1	A35J1	Fan Tray
P10	A6J14	To Rack Interface PWB
P11	A6J15	To Rack Interface PWB
P12	A6J6	To Rack Interface PWB
P13	A6J7	To Rack Interface PWB
P14	A11A1J1	To Control DisplayPWB
P15	A8J9	To PDM Distribution
P16	U2J1	DC Current probe
P17	A11A1J3B	To Control DisplayPWB
P18	A47U1J1	Arc Detector PWB
P19	U3CN3	To U3: +15V P/S
P2	A36J1	Fan Tray
P22	U4CN3	To U4: +15V P/S

Table 4.4: NX50 Transmitter - Connector Mating Information

Connector	Mate	Note
P23	A42J1	Current sample
P24	A41J1	Voltage sample
P25	U5CN1	To U5: +48V P/S
P26	U6CN1	To U6: +48V P/S
P27	A43A1J3	Directional Coupler
P28	A9J1	B+ sample
P3	A37J1	Fan Tray
P30	A40A1U1CPU12V1	Door Comp. P/S
P33	A65A1U1F_PANEL1	To Front Door Computer
P35	A48A1J1	AC Power Indicator
P4	A38J1	Fan Tray
P5	A39J1	Fan Tray
P6	A6J8	To Rack Interface PWB
P7	A6J9	To Rack Interface PWB
P8	A6J11	To Rack Interface PWB
P9	A6J12	To Rack Interface PWB
W10P1	A29A1J1	
W10P2	A8J5C	
W11P1	A20A1J1	
W11P2	A8J1F	
W12P1	A30A1J1	
W12P2	A8J1G	
W13P1	A21A1J1	
W13P2	A8J2F	
W14P1	A31A1J1	
W14P2	A8J2G	
W15P1	A22A1J1	
W15P2	A8J3F	
W16P1	A32A1J1	
W16P2	A8J3G	
W17P1	A23A1J1	
W17P2	A8J4F	
W18P1	A33A1J1	
W18P2	A8J4G	
W19P1	A24A1J1	
W19P2	A8J5F	
W1P1	A15A1J1	

Table 4.4: NX50 Transmitter - Connector Mating Information

Connector	Mate	Note
W1P2 A	8J1B	
W20P1	A34A1J1	
W20P2	A8J5G	
W21P1	A7J3F	
W21P2	A1A1J11	
W22P1	A7J3D	
W22P2	A1A1J12	
W23P1	A7J3B	
W23P2	A2A1J11	
W24P1	A7J2H	
W24P2	A2A1J12	
W25P1	A7J2F	
W25P2	A3A1J11	
W26P1	A7J2D	
W26P2	A3A1J12	
W27P1	A7J2B	
W27P2	A4A1J11	
W28P1	A7J1H	
W28P2	A4A1J12	
W29P1	A7J1F	
W29P2	A5A1J11	
W2P1	A25A1J1	
W2P2	A8J1C	
W30P1	A7J1D	
W30P2	A5A1J12	
W3P1	A16A1J1	
W3P2	A8J2B	
W4P1	A26A1J1	
W4P2	A8J2C	
W5P1	A17A1J1	
W5P2	A8J3B	
W61P1	A11A1J15A	PDM Driver
W61P2	A8J6	PDM Driver
W62P1	A11A1J15B	PDM Driver
W62P2	A8J7	PDM Driver
W64P1	A11A1J14A	RF Driver
W64P2	A7J4	RF Driver

Table 4.4: NX50 Transmitter - Connector Mating Information

Connector	Mate	Note
W65P1	A40U4P/S	Door Monitor P/S
W66P1	A11A1J2	Streaming Bus
W66P2	A40A1U1COM3	Streaming Bus
W67P1	A11A1J3A	Serial Bus
W67P2	A40A1U1COM1	Serial Bus
W69P1	A6J1	Add Labels to W69
W69P2	A1A1J6	Add Labels to W69
W6P1	A27A1J1	
W6P2	A8J3C	
W70P1	A6J5	Add Labels to W70
W70P2	A5A1J6	Add Labels to W70
W7P1	A18A1J1	
W7P2	A8J4B	
W8P1	A28A1J1	
W8P2	A8J4C	
W9P1	A19A1J1	
W9P2	A8J5B	

Table 4.5: Fan Tray Assembly (Nautel Part # 207-8133) - Wiring List

Source	Destination	Wire #	Color	Size	Remarks
J1-01	E1	1	Red	22	Cut wire 3" (V+)
J1-02	E2	2	Black	22	Cut wire 3" (V-)
J1-03	E3	3	Yellow	22	Cut wire 3" (TACH)
J1-04	E4	4	Red	22	Cut wire 13" (V+)
J1-05	E5	5	Black	22	Cut wire 13" (V-)
J1-06	E6	6	Yellow	22	Cut wire 13" (TACH)

Section 5: Reading Electrical Schematics

This section contains electrical schematics and logic diagrams for the transmitter. Block diagrams, simplified electrical schematics, and logic diagrams may be included. Refer to Table 5.1 on page 5-5 for an itemized listing.

Component values

Unless otherwise specified on the logic or schematic diagram, the following defaults apply:

- Resistor values are shown in ohms (K = 1,000 and M = 1,000,000)
- Resistor power ratings are not shown when less than 0.5 W
- Capacitor values are shown in microfarads (uF)
- Unidentified diodes are part number 1N4938 (Nautel Part # QAP29)

Graphic symbols

The graphic symbols used on electrical schematics are in accordance with *American National Standard ANSI Y32.2-1975 - Graphic Symbols for Electrical and Electronic Diagrams.*

Logic symbols

The logic symbols used on electrical schematics and logic diagrams are in accordance with *American National Standard ANSI Y32.14-1975 - Graphic Symbols for Logic Diagrams.*

Reference designations

Referenced designations were assigned in accordance with *American National Standard ANSI Y32.16-1975 - Reference Designations for Electrical and Electronic Parts and Equipment.*

Each electrical symbol is identified with its basic reference designation. To obtain the full reference designation for a specific part, prefix this basic identifier with the reference designation assigned to all higher assemblies. For example, the complete designation for a resistor (R1) on a printed wiring board (A1), that is part of a larger board (A2), would be A2A1R1.

Unique symbols

Nautel uses unique symbols on electrical schematics to describe logic (two-state) signals. These signals differ from single-state signals or analog signals that may have multiple values.

Type of inputs and outputs

On electrical schematics, names used to describe logic (two-state) input and output signals are prefixed with a # symbol.

Logic level convention

The # prefix identifies an input or output signal that has two distinct states: high and low.

The suffix on an input or output signal name identifies the *active* (true) state of the signal. The *high suffix* (+) indicates the more positive of the two levels used to represent the logic states. The *low suffix* (-) indicates the less positive of the two levels.

Two types of logic, positive and negative, may be represented on a particular schematic. In positive logic, high represents the *active* (true) state, and low represents the *inactive* (false) state. In negative logic, low represents the *active* (true) state, and high represents the *inactive* (false) state.

Identifying schematic diagrams

Each electrical schematic in this section is identified by a number that is both the figure number and the page number. The numbers are assigned sequentially are prefixed by the letters SD. The electrical schematics and logic diagrams included in this section are listed in Table 5.1 on page 5-5.

Structure of schematics

The electrical schematics are structured in a hierarchical format that is based on function and signal flow. Wherever practical, the signal flow is from left to right. Normally, inputs originate on the left-hand side and outputs extend to the right-hand side. Exceptions are shown by an arrow indicating the direction of signal flow.

> *Note: The physical location of a part or assembly was not necessarily a factor during creation of the schematic. The full reference designation assigned to a part or assembly, in conjunction with the family tree (see* Section 3, "Parts Lists" on page 3-1*) and the assembly detail drawings (see* Section 6, "Mechanical Drawings" on page 6-1*), will identify its location.*

Figures SD-1 through SD-4 identify each major stage and its detailed interconnection. Each stage contains cross-references that identify which blocks are the signal sources for inputs, or the destinations for outputs.

When a sub-function is treated as a block in figures SD-1 through SD-4, its detailed circuit information is included in its own schematic drawing(s), which is also included in this section.

Locating schematic diagram(s) for a functional block

The text inside a functional block provides the key to locating its schematic diagram(s).

1. When a functional block is assigned a reference designation (e.g., A2A1), refer to the family trees in Section 3, "Parts Lists" on page 3-1. Follow the family tree branches to the block that contains the desired reference designation, and associated Nautel nomenclature (e.g., NAPA34A Modulator/Power Amplifier PWB). Note the reference designations and Nautel nomenclatures of all higher assemblies in the path.
   Example: A15 NAP39A RF Power Module > A15A1 NAPA34A Modulator/Power Amplifier PWB.

2. Refer to Table 5.1 on page 5-5 and use the reference designation and Nautel nomenclature to identify the appropriate schematic diagram(s).
   Example: NAPA34A Modulator/Power Amplifier PWB is shown on schematic SD-23.

3. If necessary, refer to the referenced figure (e.g., SD-23) in the schematics at the end of this section and locate the next, lower-level assembly. Then, repeat this procedure until the desired schematic diagram is found.

Locating a part or assembly on a schematic

The full reference designation assigned to a part or assembly is the key to physically locating that part or assembly.

> *Note: Full reference designations contain the assembly hierarchical coding. When the end item is divided into units (cabinets), the first coding is a unit number (1, 2, 3, etc.). When the end item is divided into assemblies, the first coding is an assembly number (A1, A2, A3, etc.). If a unit or an assembly is divided into sub-assemblies, assembly coding that identifies assembly relationship (1A1, A2A1, A2A1A1, etc.) is added.*

1. Refer to the family trees in Section 3, "Parts Lists" on page 3-1.

2. Follow the family tree branches to the block that contains the desired reference designation, while noting the Nautel nomenclatures and names of all higher assemblies in the path.
   Example: A15 NAP39A RF Power Module > A15A1 NAPA34A Modulator/Power Amplifier PWB.

> *Note: The drawings in the* Mechanical Drawings *section depict the assembly detail of the transmitter and its modules and assemblies.*

3. Refer to Table 6.1 in Section 6, "Mechanical Drawings" on page 6-1. Use the Nautel nomenclature and name of each family tree block in the path, starting at the highest assembly – this is normally Figure MD-1 – to determine the figure number(s) for that assembly.
   Example: NAPA34A Modulator/Power Amplifier PWB is shown on MD-16.

4. Refer to the referenced figure (e.g., MD-16) in Section 6.1, "List of Mechanical Drawings" on page 6-2 to locate the desired part or assembly.

Table 5.1: List of Electrical Schematics

Figure #	Title
SD-1	NX50 Transmitter - Ac-Dc Power Stage
SD-2	NX50 Transmitter - Exciter Stage
SD-3	NX50 Transmitter - Control/Monitor Stage
SD-4	NX50 Transmitter - RF Power Stage (Sheet 1 of 2)
SD-5	NX50 Transmitter - RF Power Stage (Sheet 2 of 2)
SD-6	NX50 Transmitter - 10 kW RF Power Block
SD-7	NAPC160B/01 Control/Interface PWB (Sheet 1 of 7)
SD-8	NAPC160B/01 Control/Interface PWB (Sheet 2 of 7)
SD-9	NAPC160B/01 Control/Interface PWB (Sheet 3 of 7)
SD-10	NAPC160B/01 Control/Interface PWB (Sheet 4 of 7)
SD-11	NAPC160B/01 Control/Interface PWB (Sheet 5 of 7)
SD-12	NAPC160B/01 Control/Interface PWB (Sheet 6 of 7)
SD-13	NAPC160B/01 Control/Interface PWB (Sheet 7 of 7)
SD-14	NAPI106 Remote Interface PWB
SD-15	NAPX46 GPS Sync PWB (Optional)
SD-16	NAPI151 USB Audio Interface PWB (Optional)
SD-17	NAPI152A Rack Interface PWB (Sheet 1 of 3)
SD-18	NAPI152A Rack Interface PWB (Sheet 2 of 3)
SD-19	NAPI152A Rack Interface PWB (Sheet 3 of 3)
SD-20	NAPI98 RF Drive Distribution PWB (Sheet 1 of 2)
SD-21	NAPI98 RF Drive Distribution PWB (Sheet 2 of 2)
SD-22	NAPI154 PDM Distribution PWB (Sheet 1 of 2)
SD-23	NAPI154 PDM Distribution PWB (Sheet 2 of 2)
SD-24	NAP39A RF Power Module and NAPA34A Modulator/Power Amplifier PWB (Sheet 1 of 2)
SD-25	NAP39A RF Power Module and NAPA34A Modulator/Power Amplifier PWB (Sheet 2 of 2)

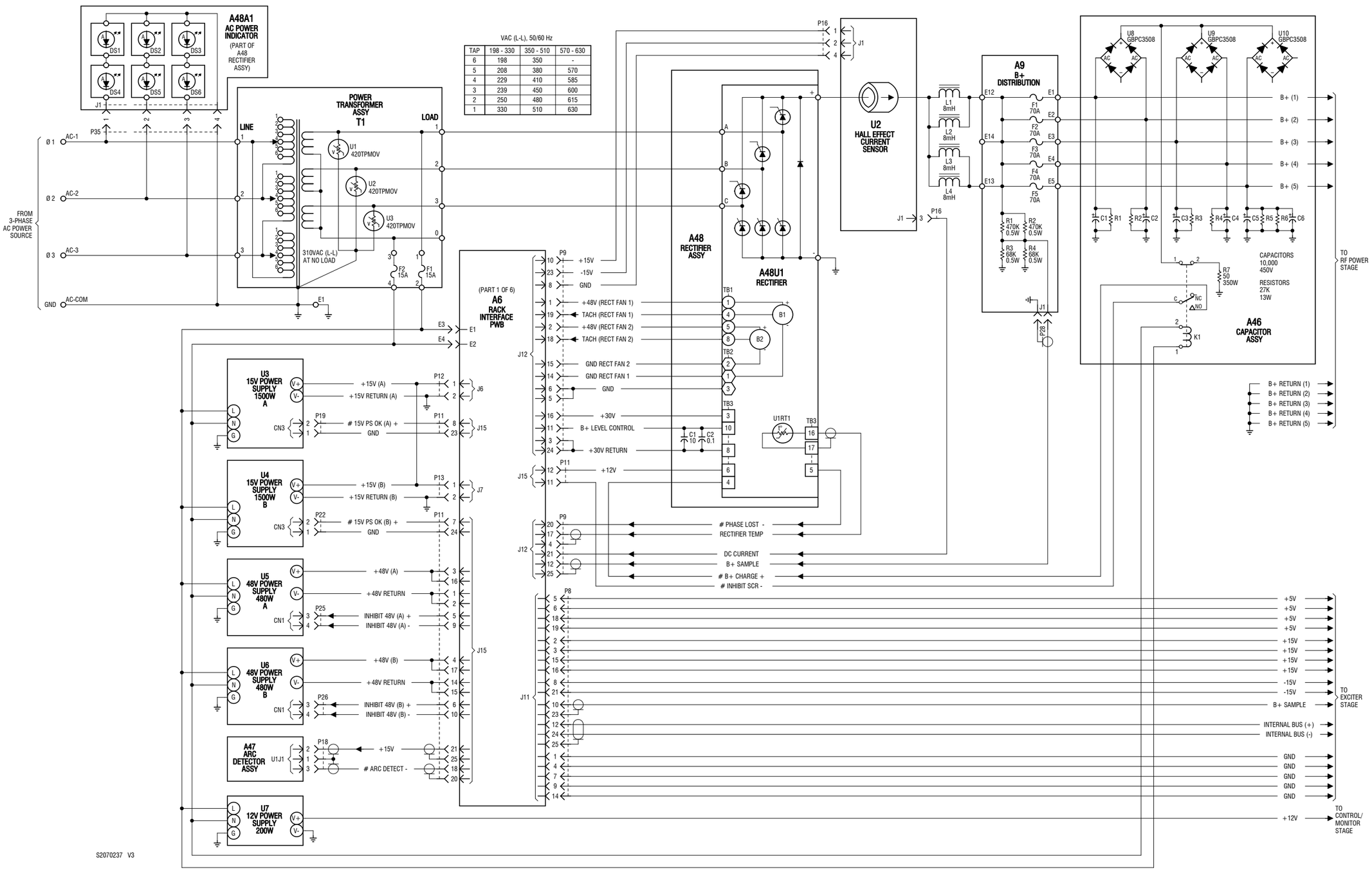

Figure SD-1: NX50 Transmitter - Ac-Dc Power Stage

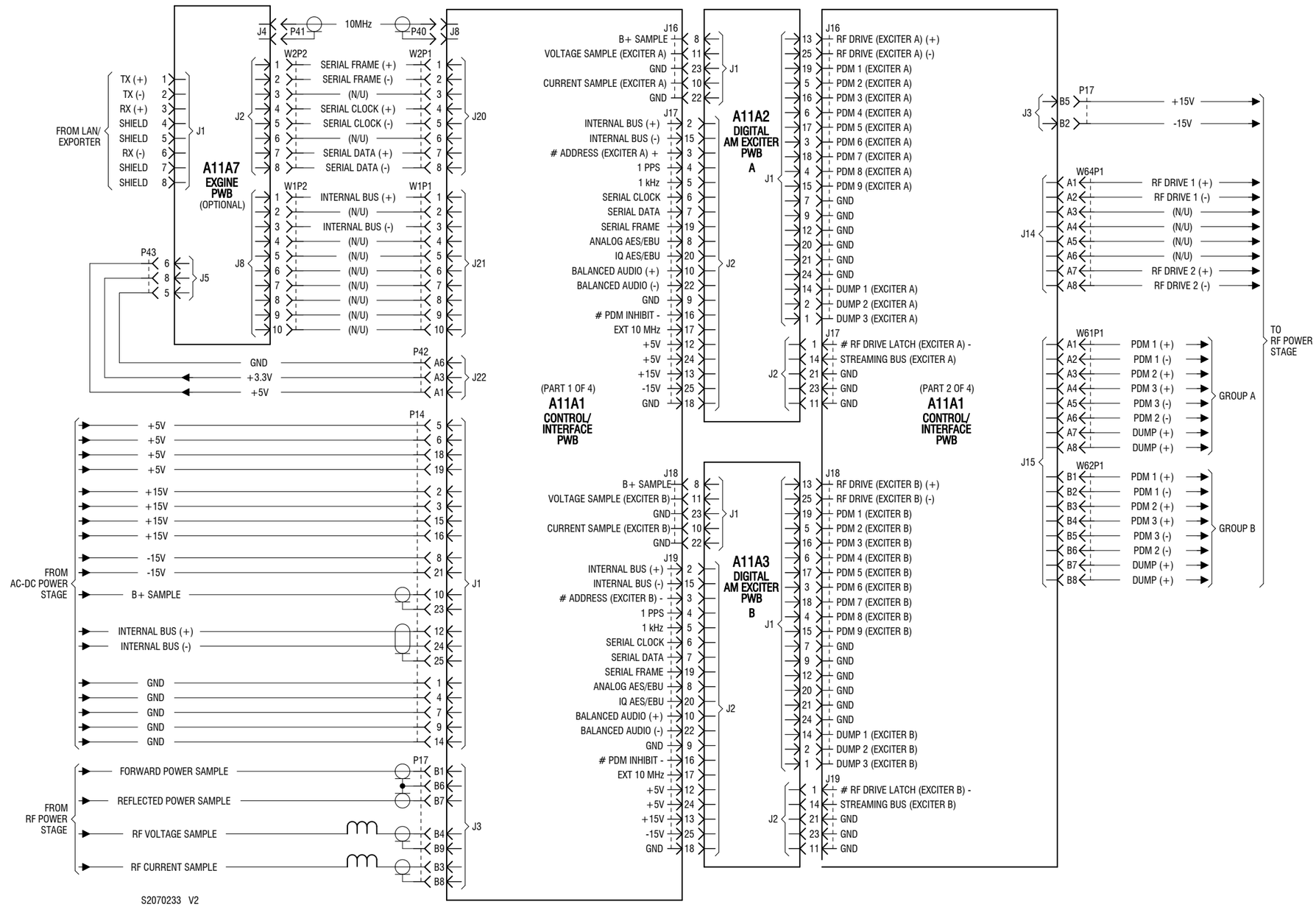

Figure SD-2: NX50 Transmitter - Exciter Stage

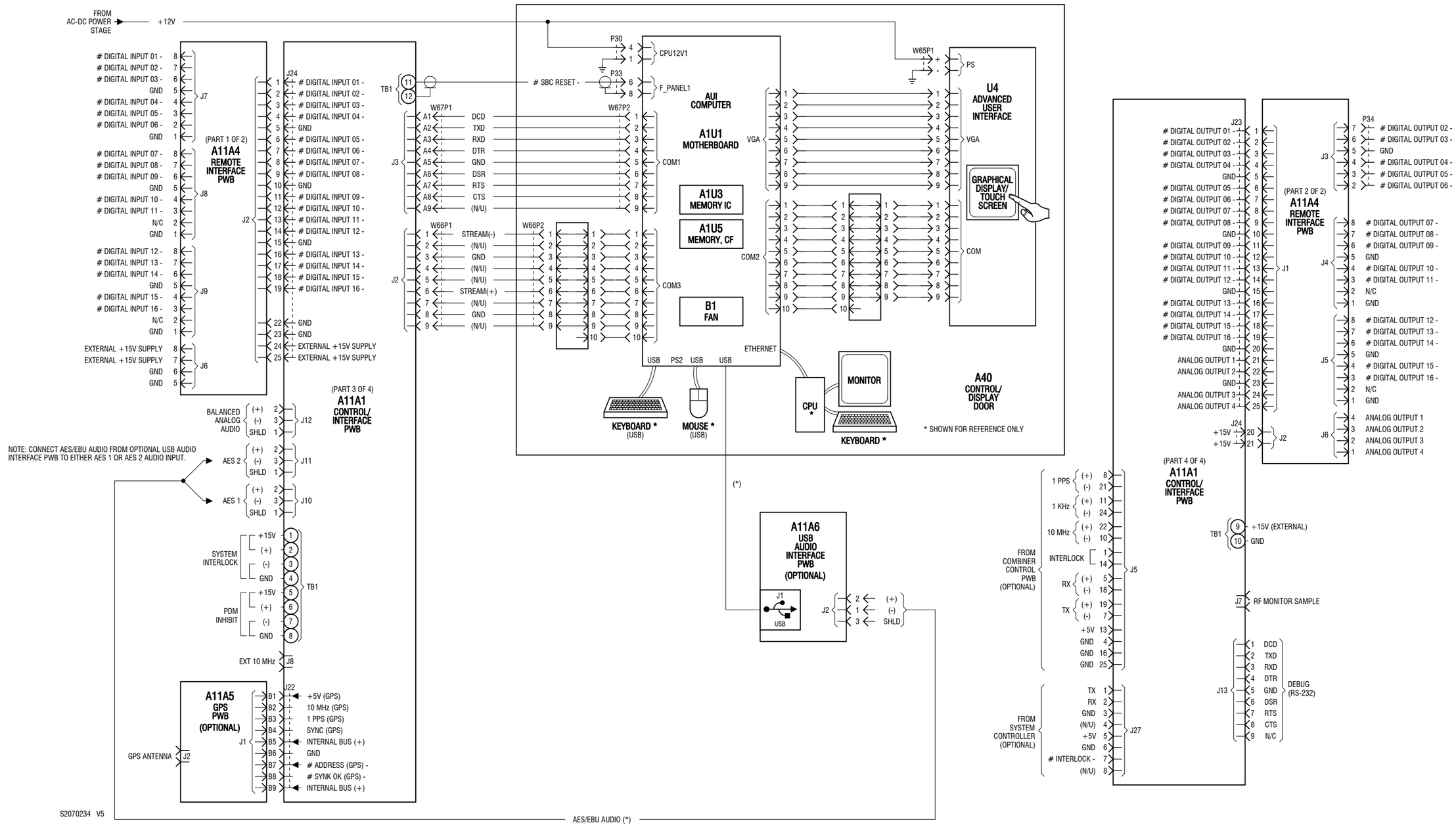

Figure SD-3: NX50 Transmitter - Control/Monitor Stage

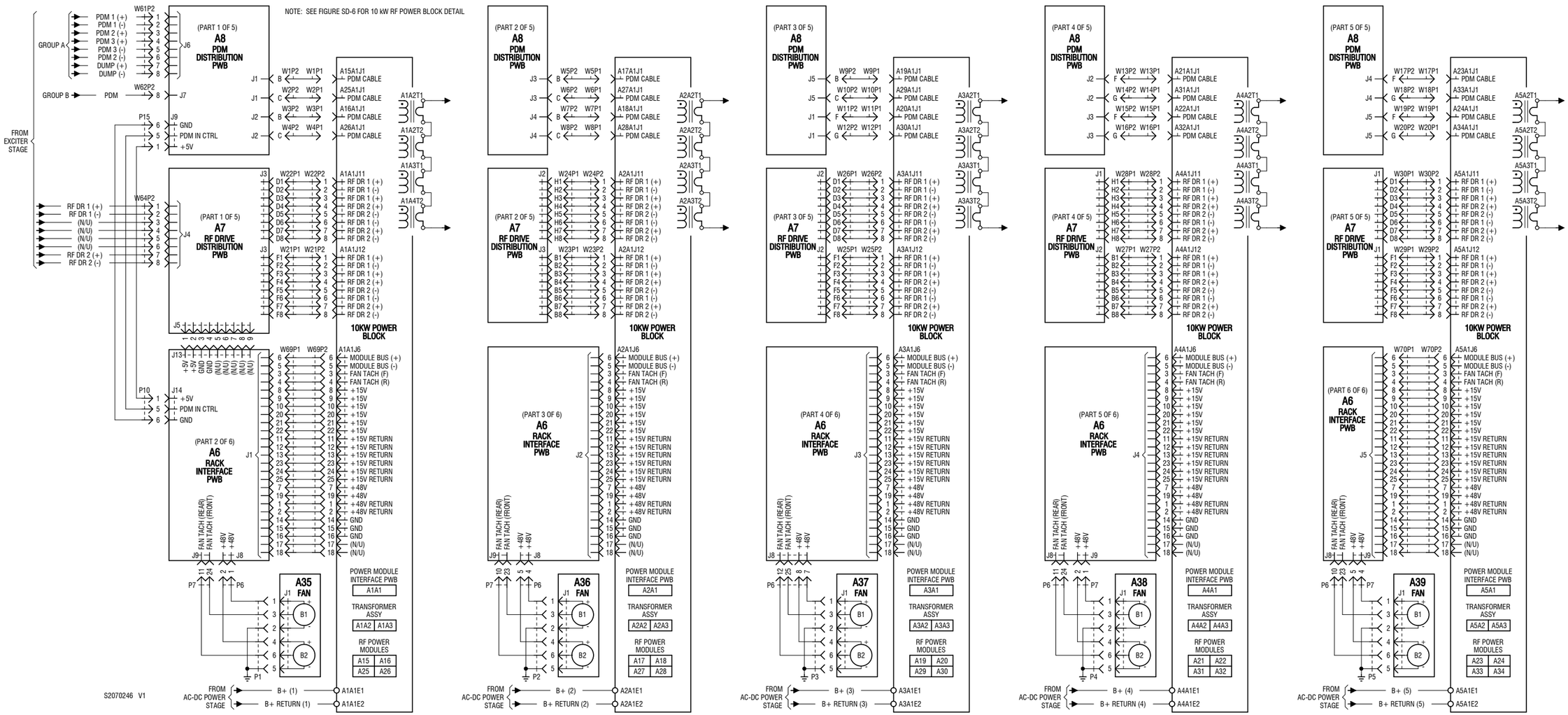

Figure SD-4: RF Power Stage (Sheet 1 of 2)

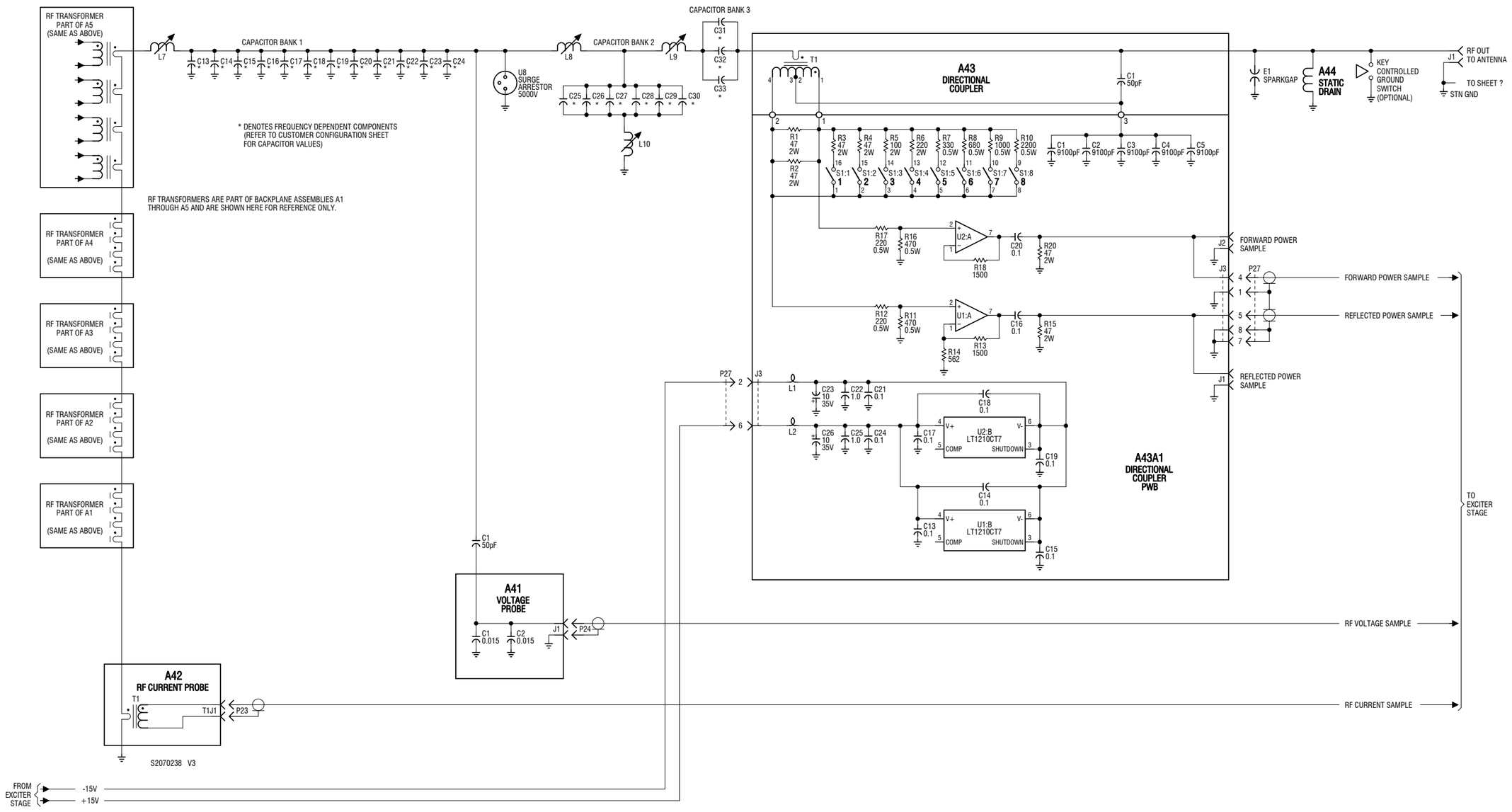

Figure SD-5: RF Power Stage, RF Output Filter (Sheet 2 of 2)

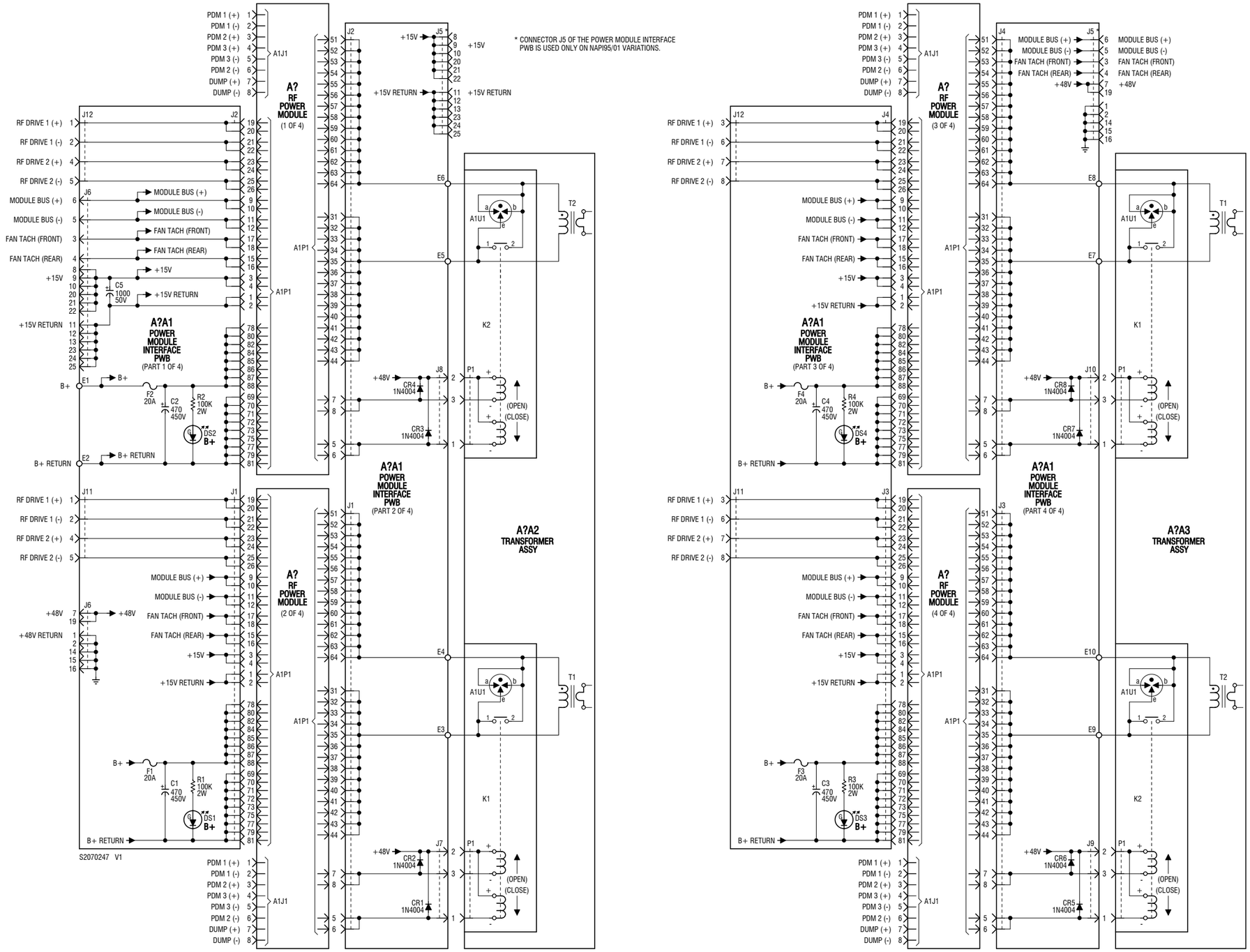

Figure SD-6: 10 kW RF Power Block

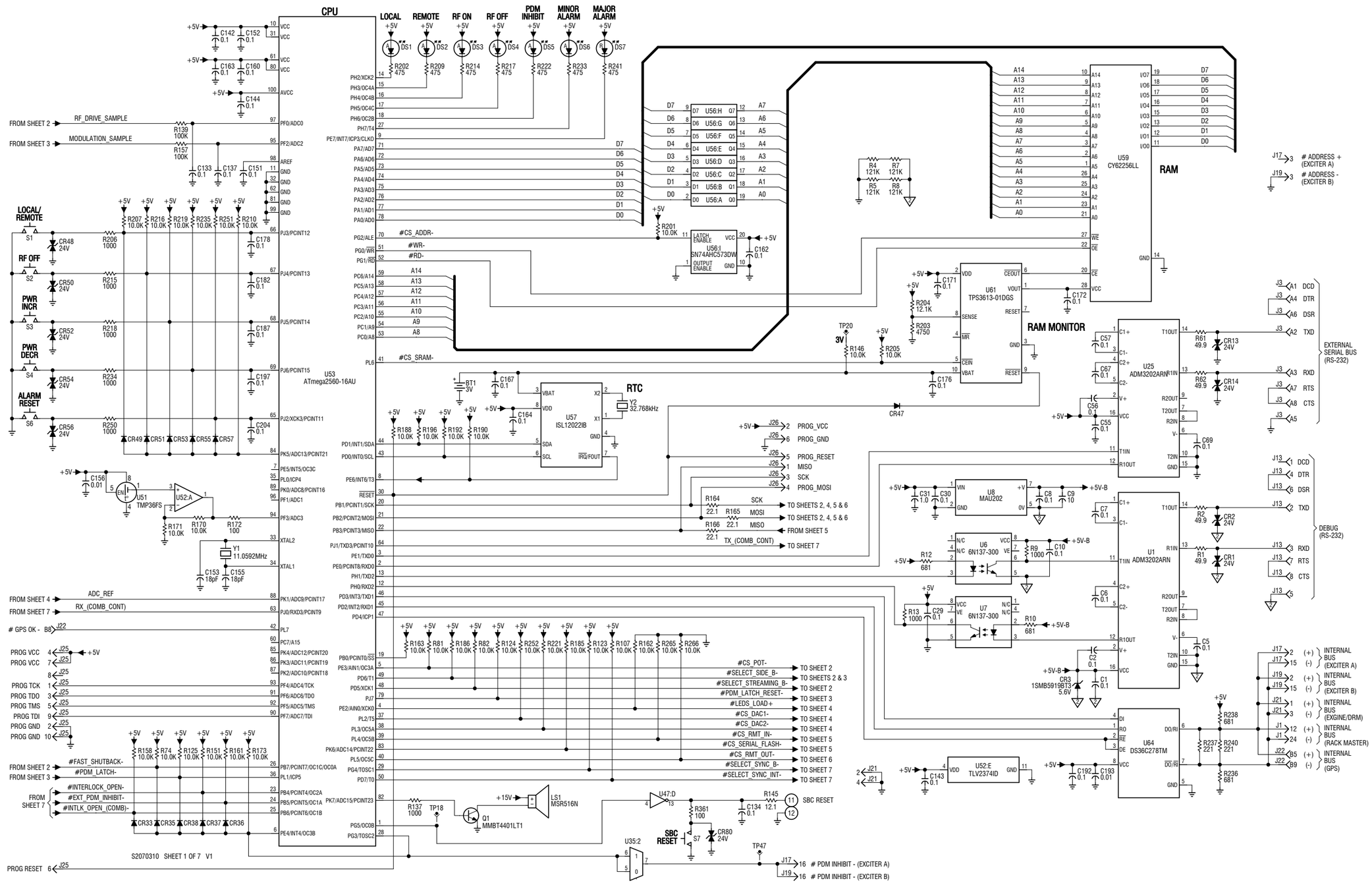

Figure SD-7: NAPC160B/01 Control/Interface PWB (Sheet 1 of 7)

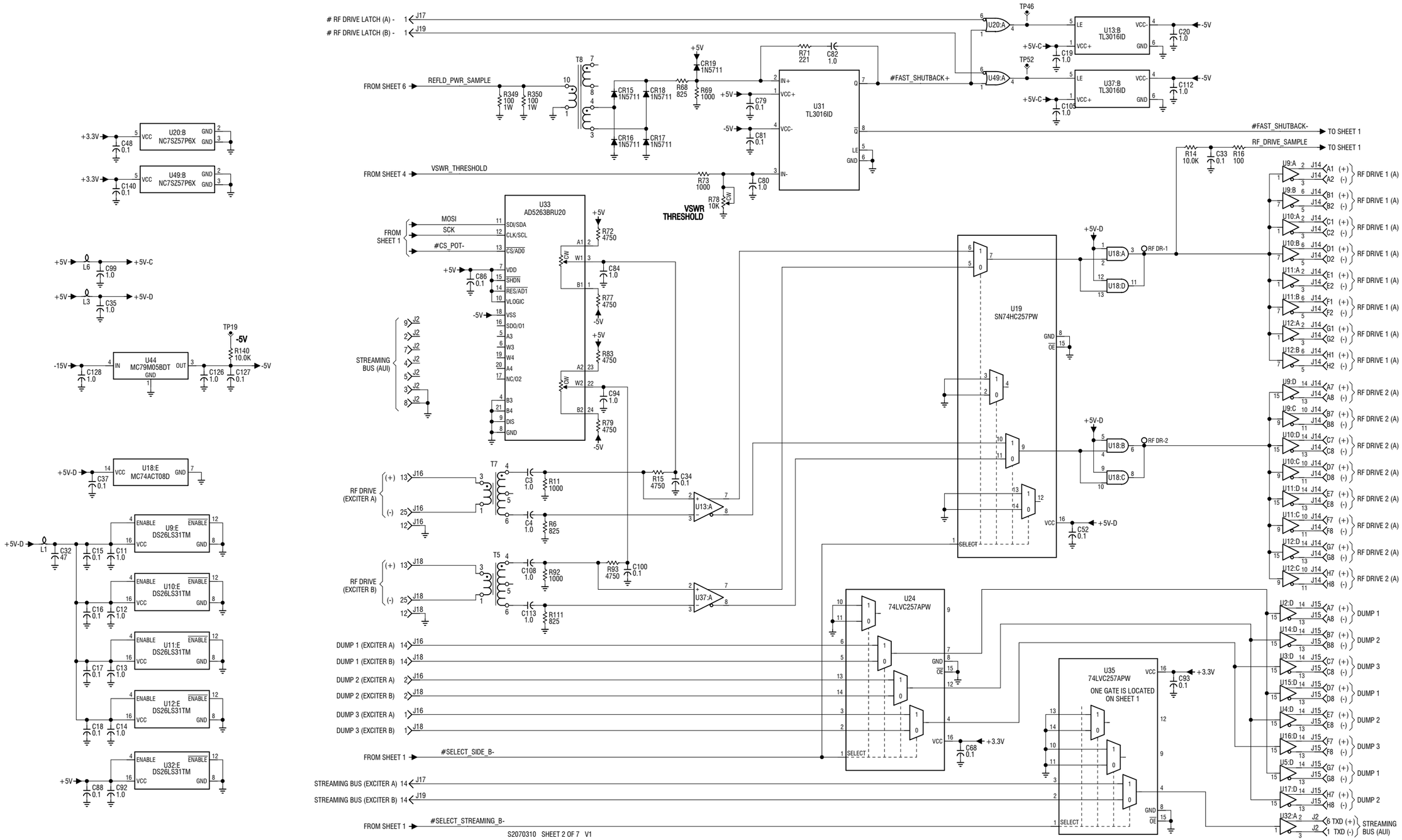

Figure SD-8: NAPC160B/01 Control/Interface PWB (Sheet 2 of 7)

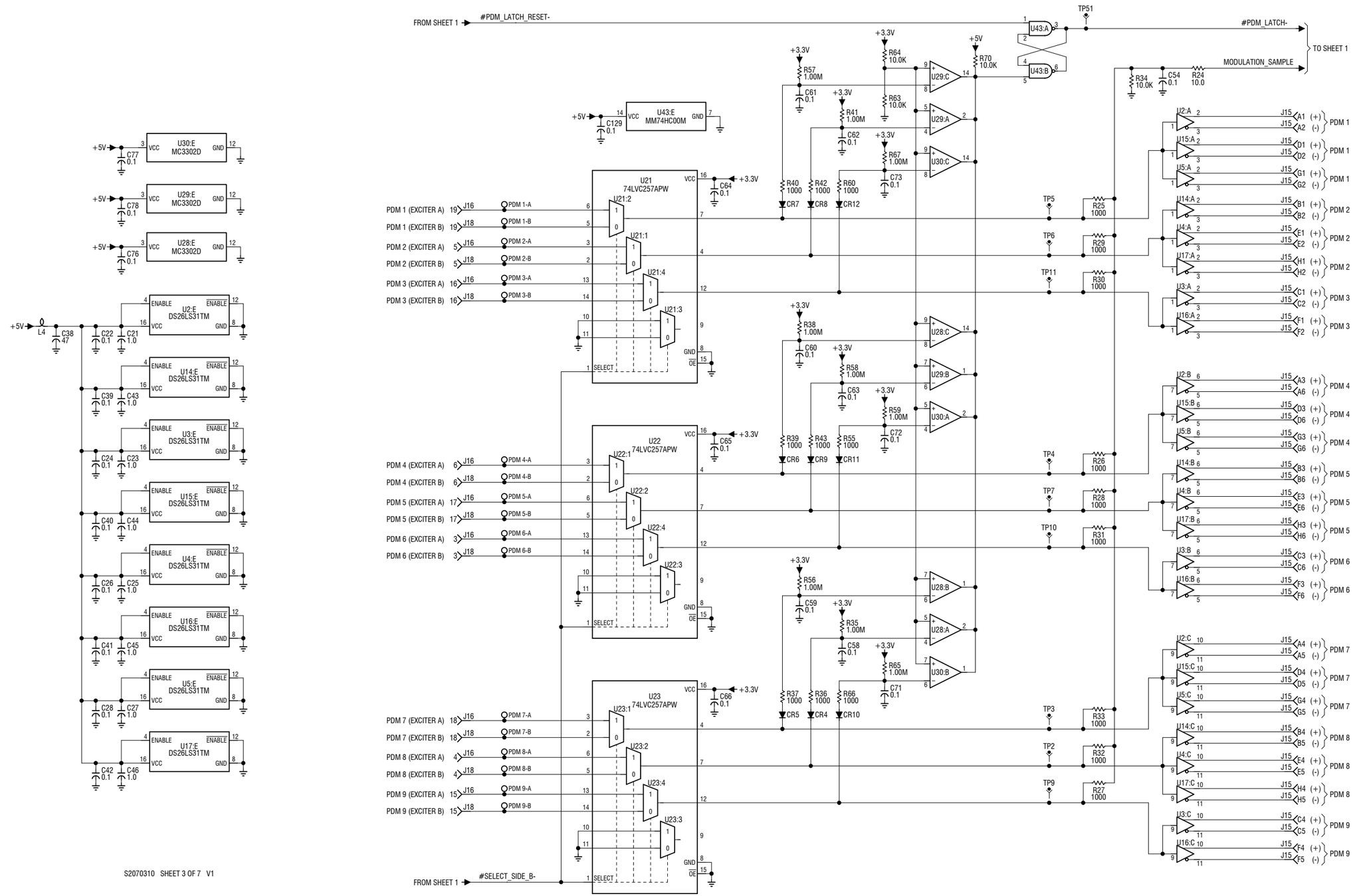

Figure SD-9: NAPC160B/01 Control/Interface PWB (Sheet 3 of 7)

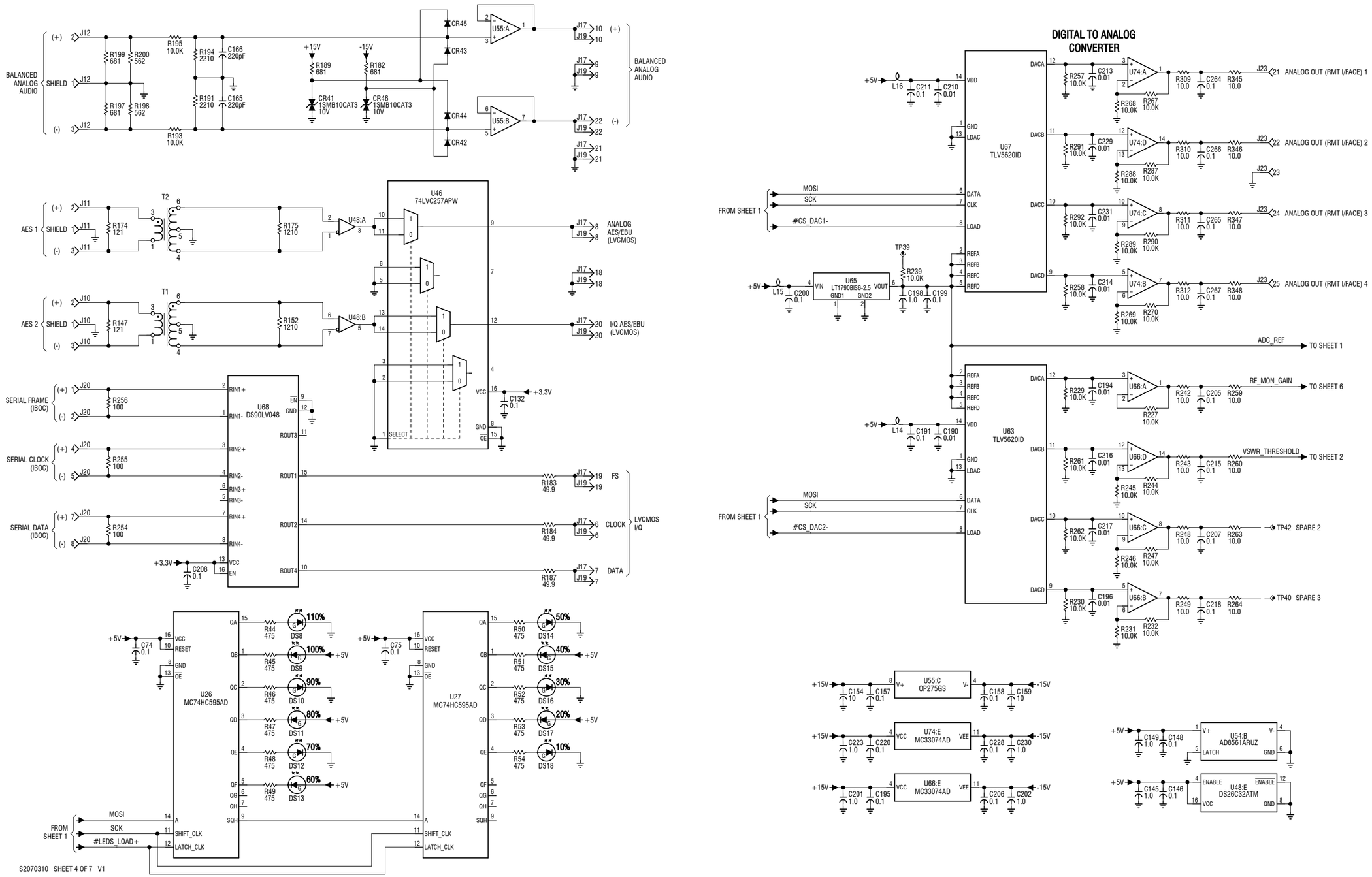

Figure SD-10: NAPC160B/01 Control/Interface PWB (Sheet 4 of 7)

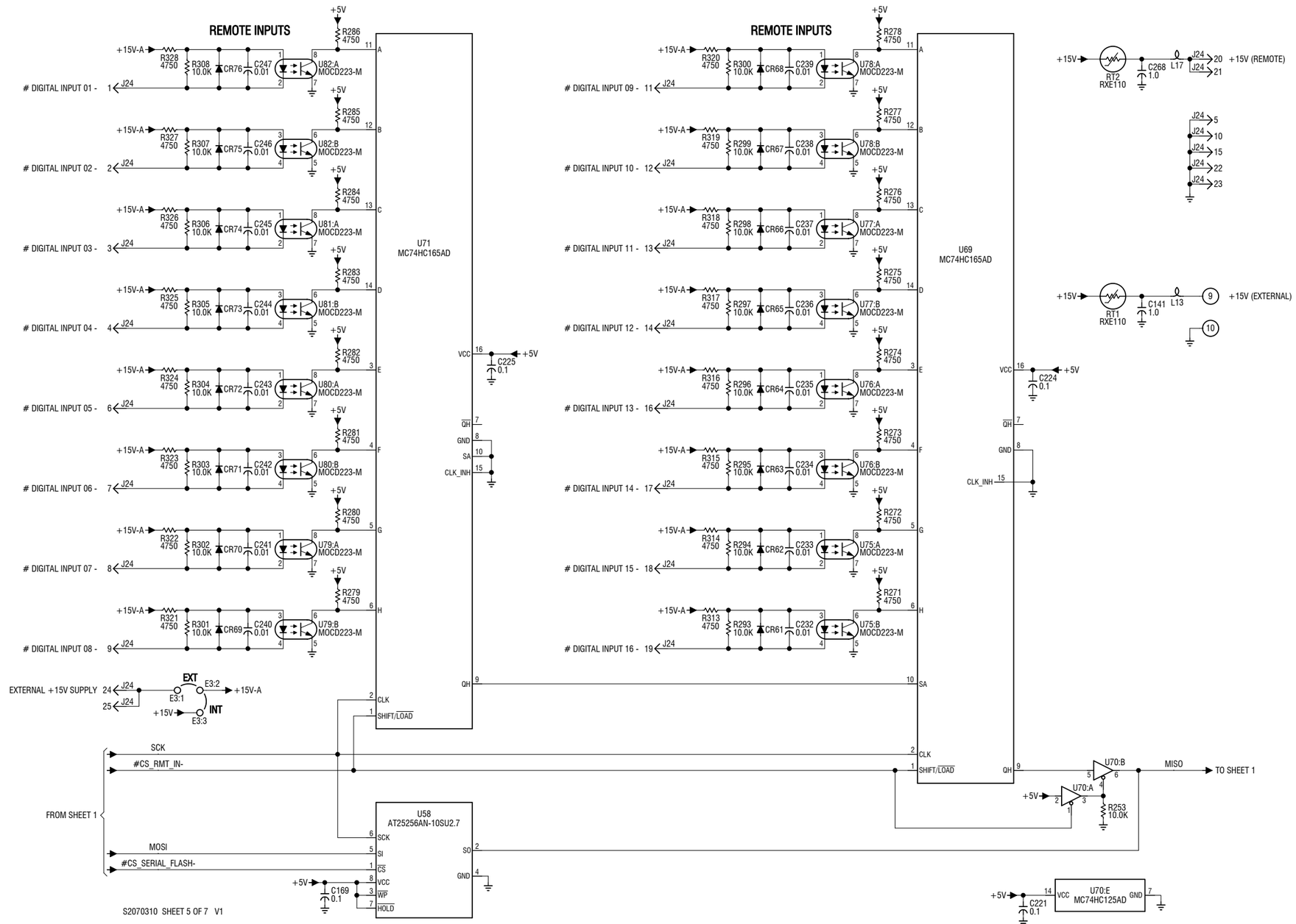

Figure SD-11: NAPC160B/01 Control/Interface PWB (Sheet 5 of 7)

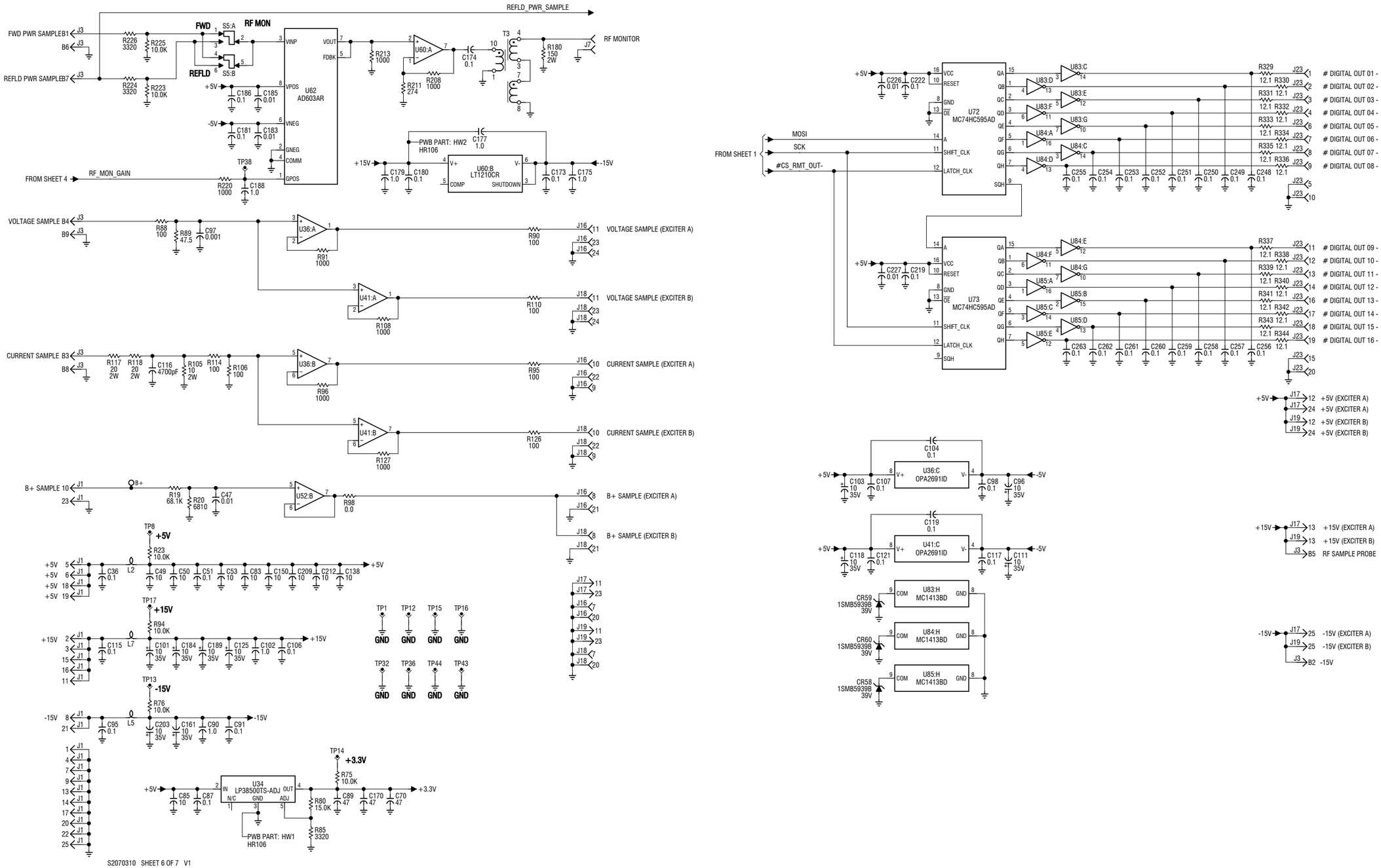

Figure SD-12: NAPC160B/01 Control/Interface PWB (Sheet 6 of 7)

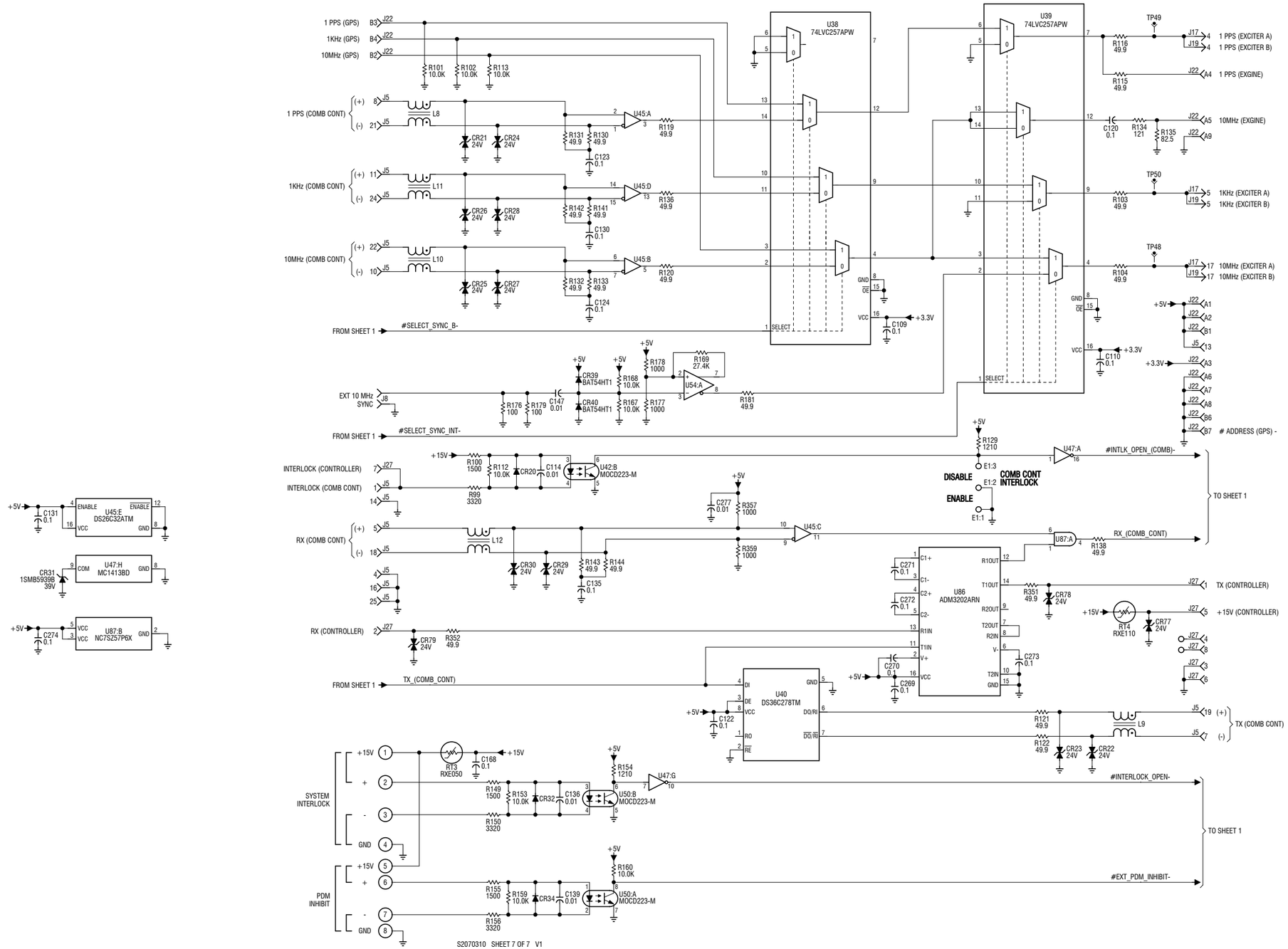

Figure SD-13: NAPC160B/01 Control/Interface PWB (Sheet 7 of 7)

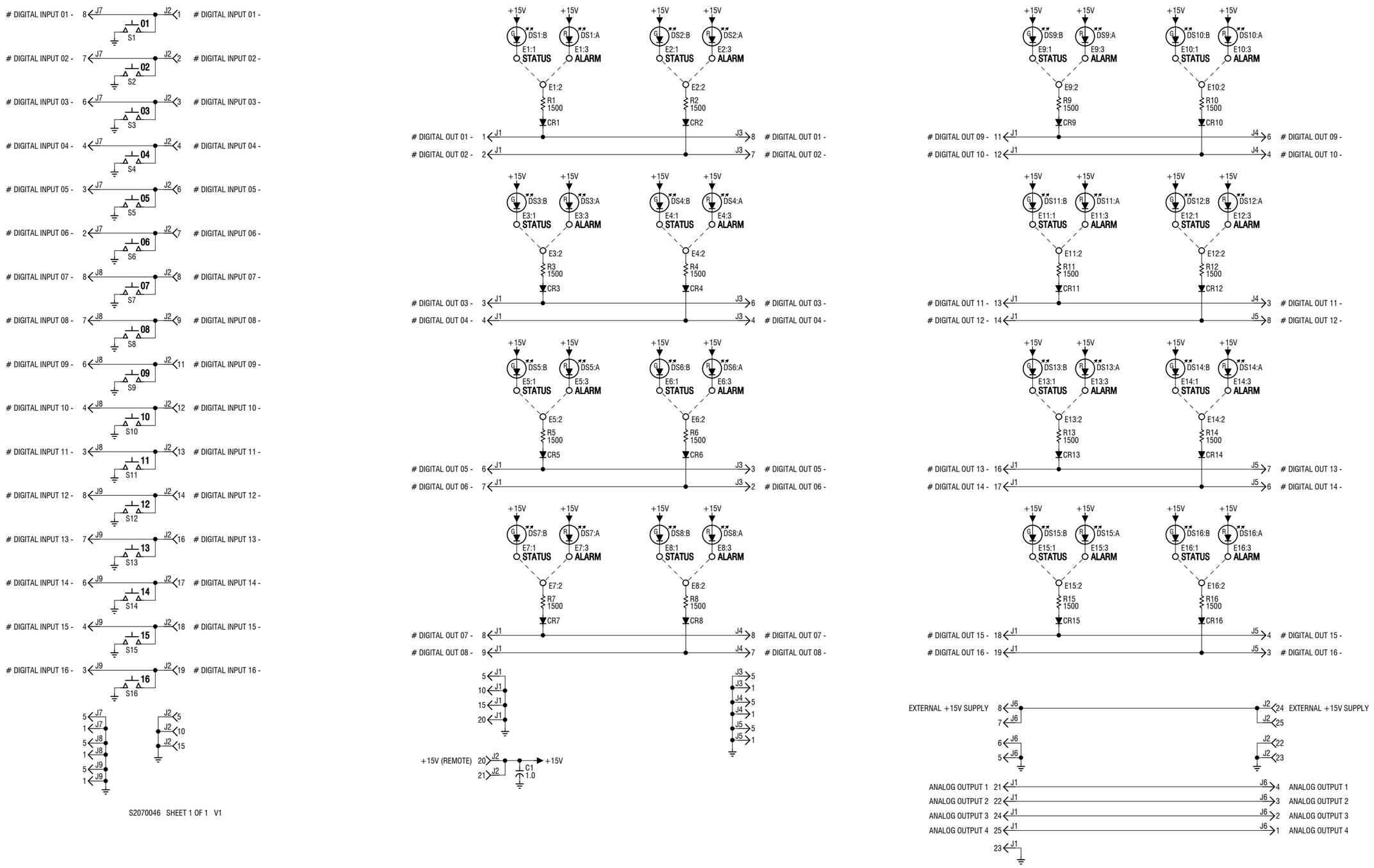

Figure SD-14: NAPI106 Remote Interface PWB

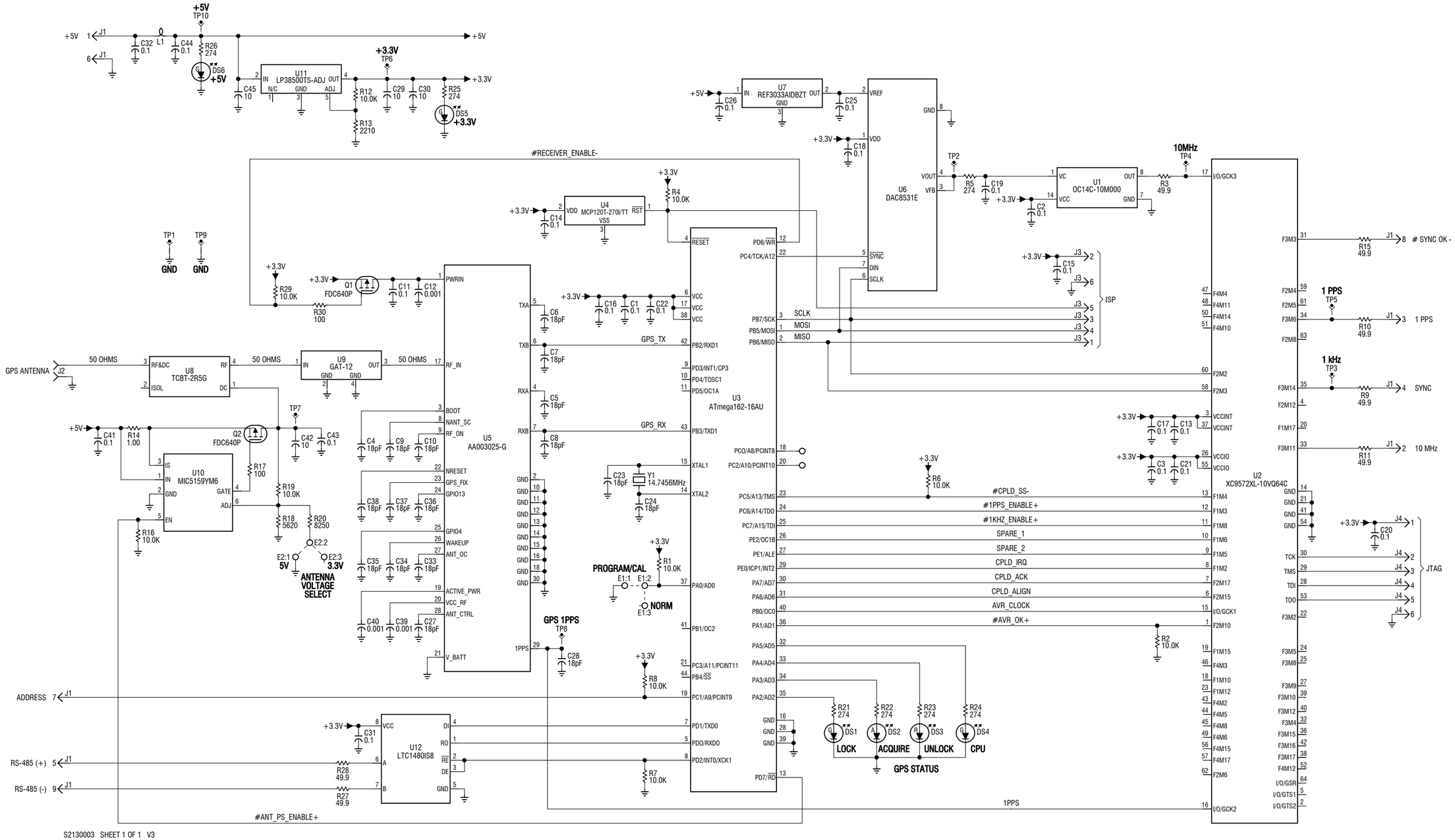

Figure SD-15: NAPX46 GPS Sync PWB (Optional)

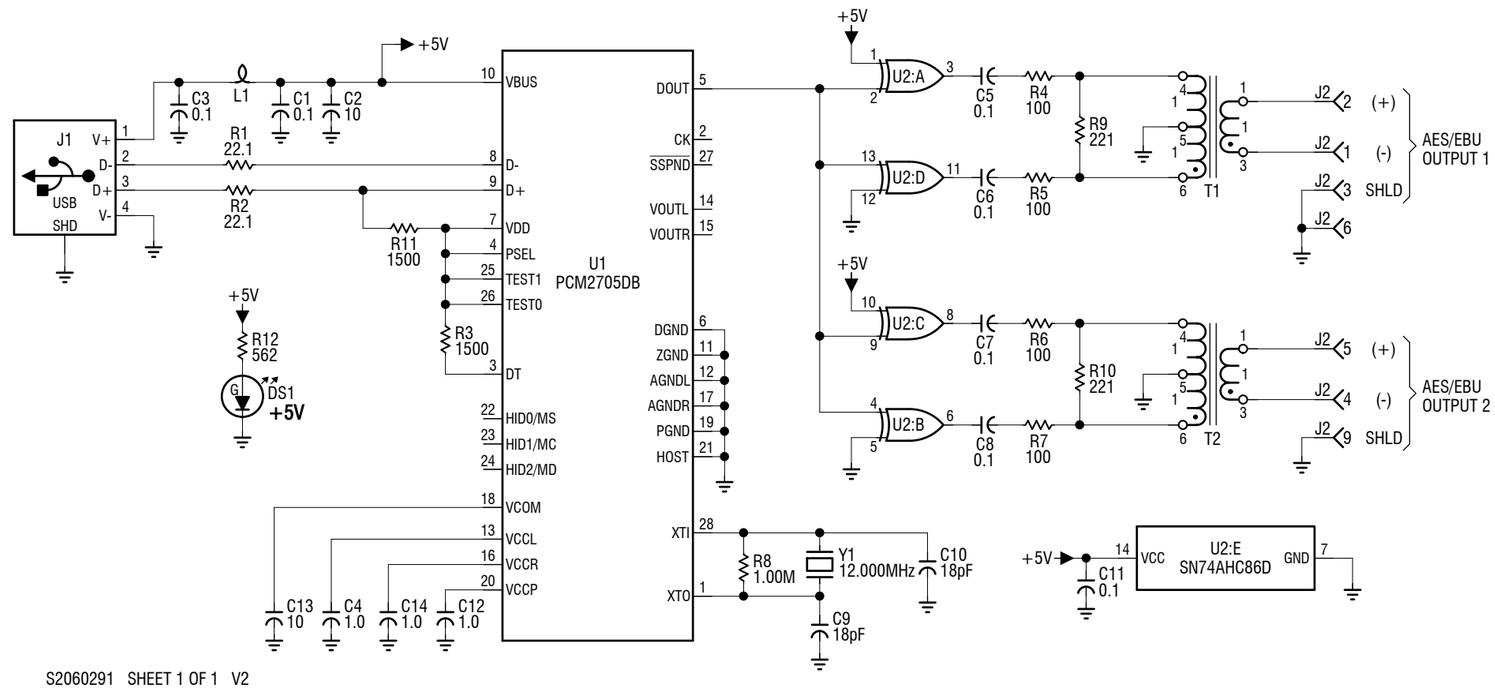

Figure SD-16: NAPI151 USB Audio Interface PWB (Optional)

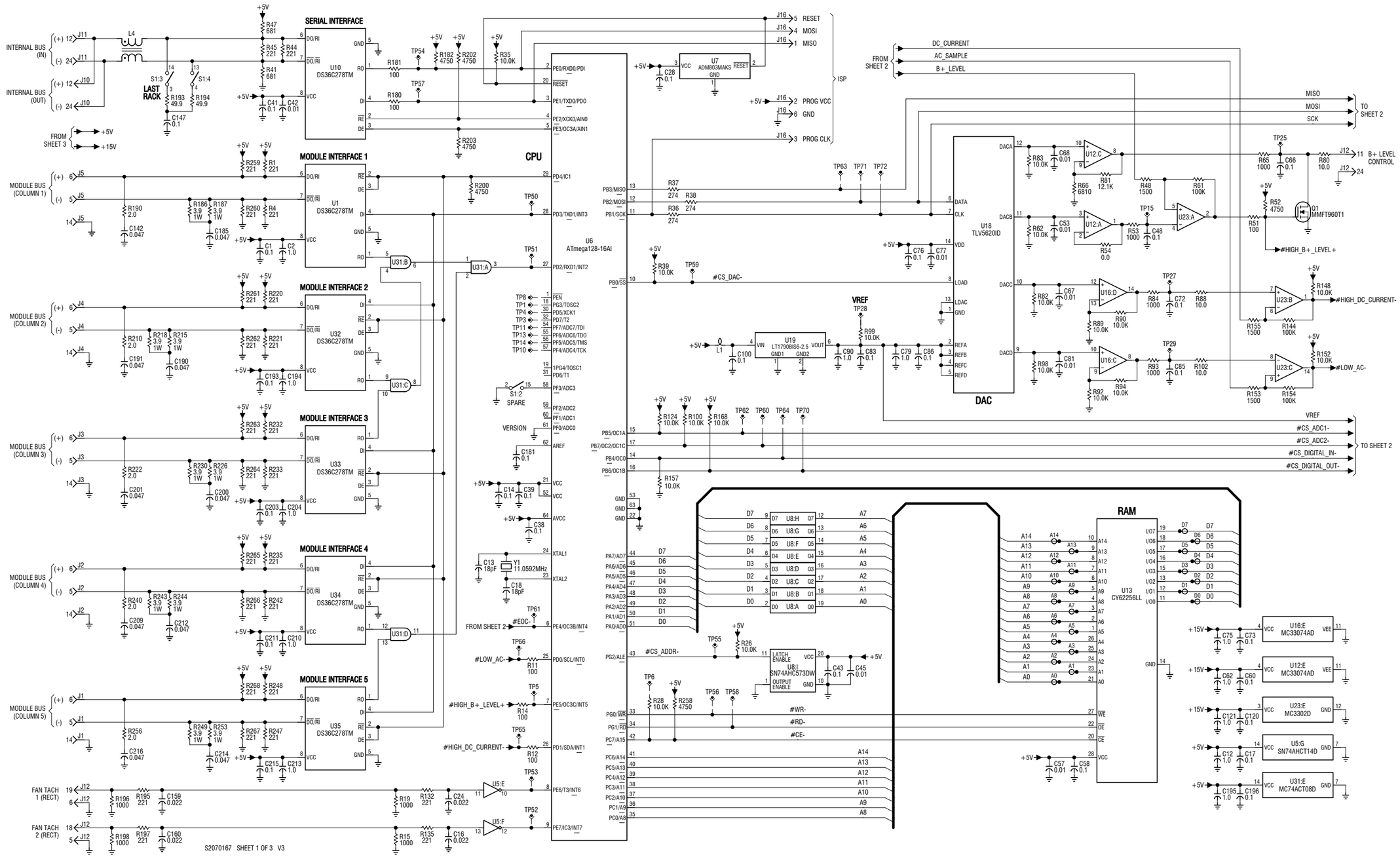

Figure SD-17: NAPI152A Rack Interface PWB (Sheet 1 of 3)

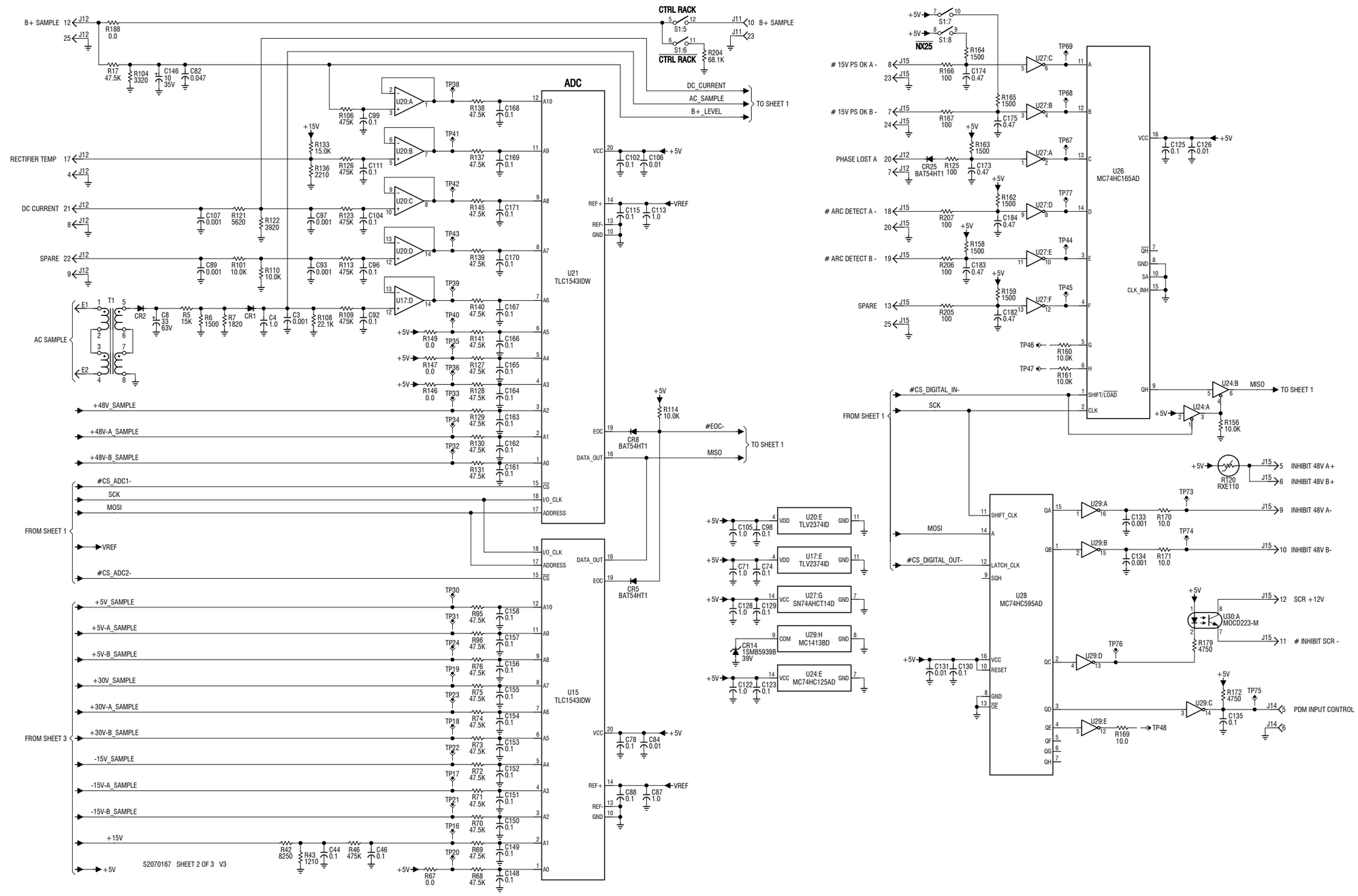

Figure SD-18: NAPI152A Rack Interface PWB (Sheet 2 of 3)

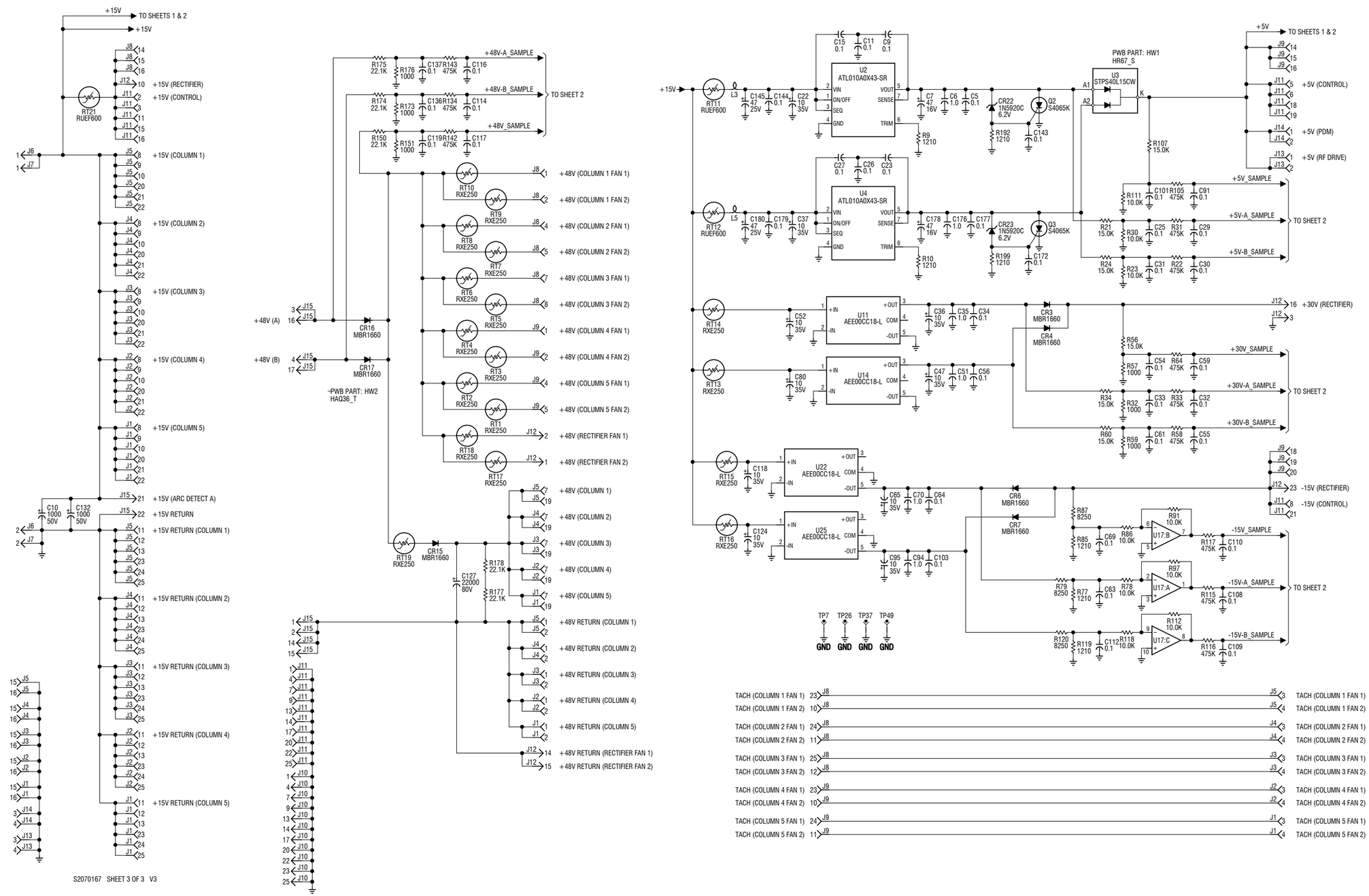

Figure SD-19: NAPI152A Rack Interface PWB (Sheet 3 of 3)

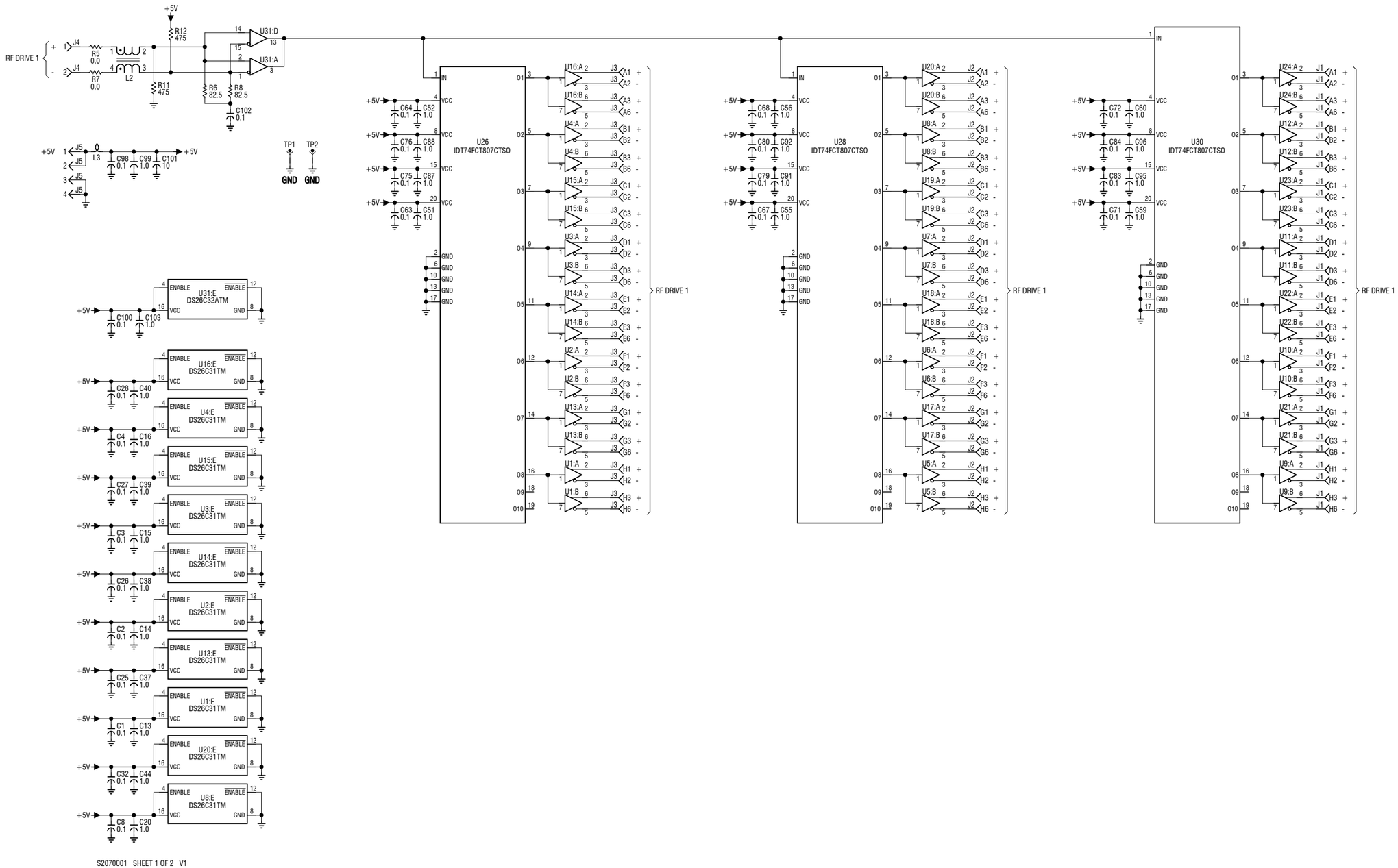

Figure SD-20: NAPI98 RF Drive Distribution PWB (Sheet 1of 2)

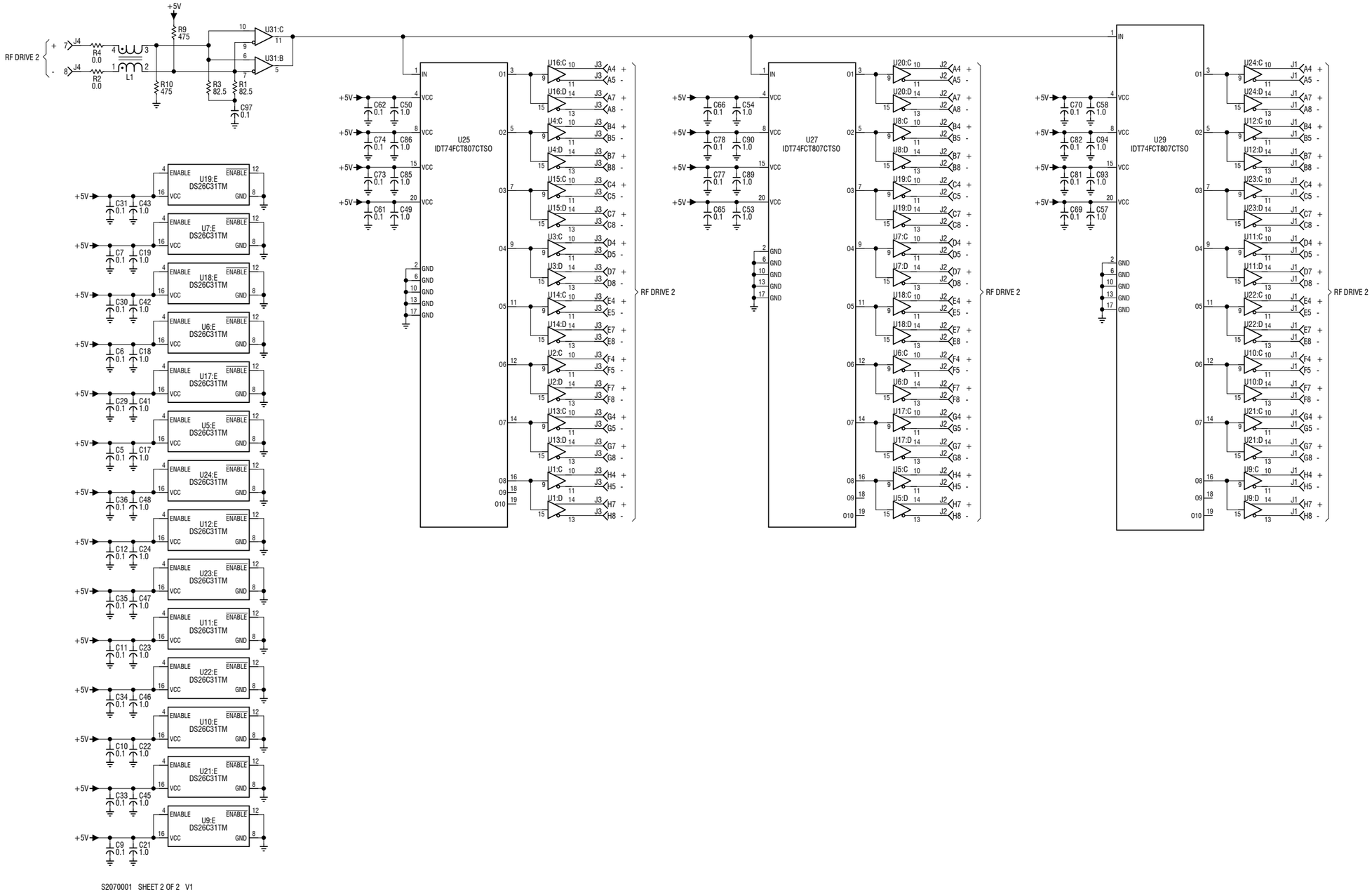

Figure SD-21: NAPI98 RF Drive Distribution PWB (Sheet 2 of 2)

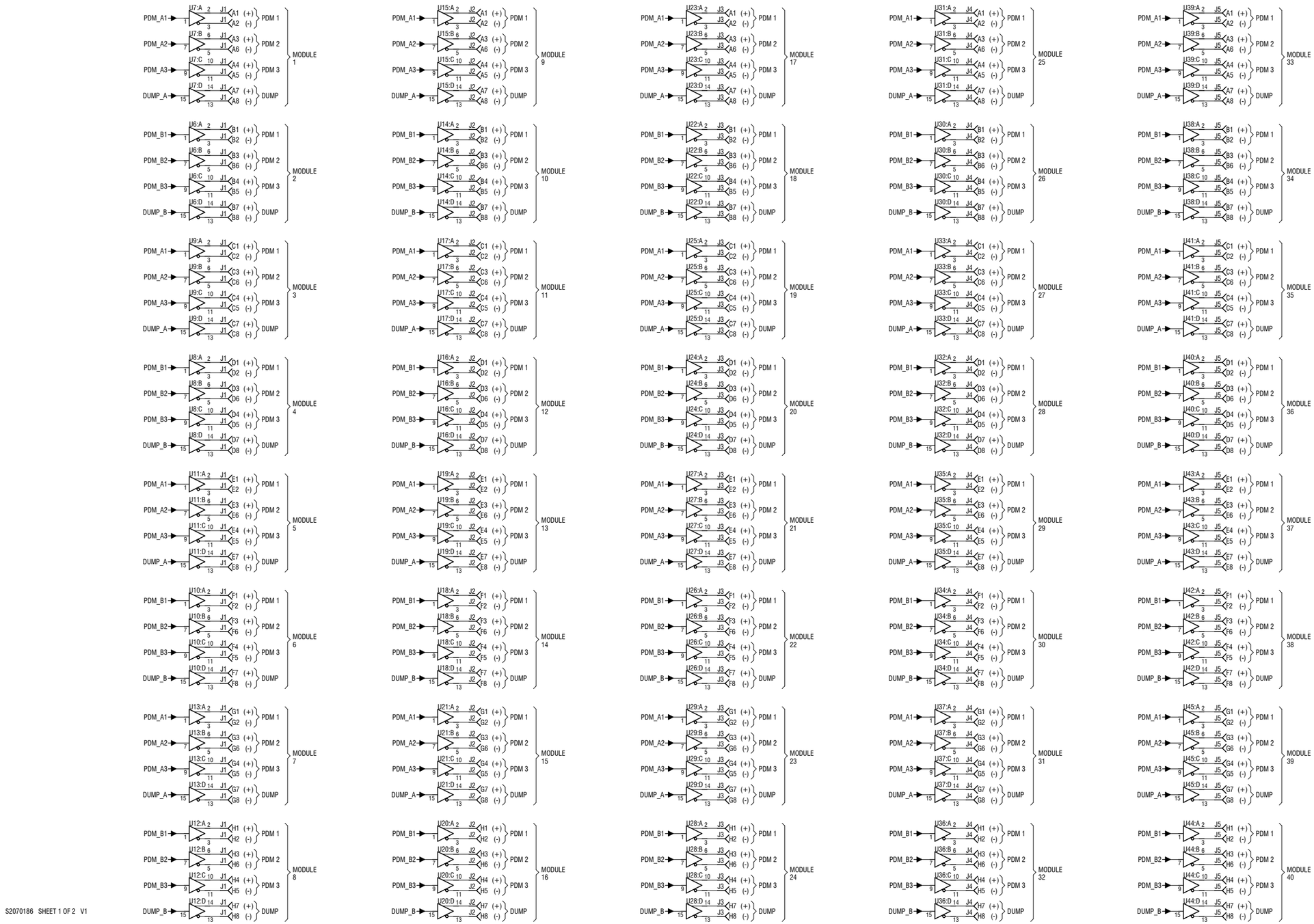

Figure SD-22: NAPI154 PDM Distribution PWB (Sheet 1 of 2)

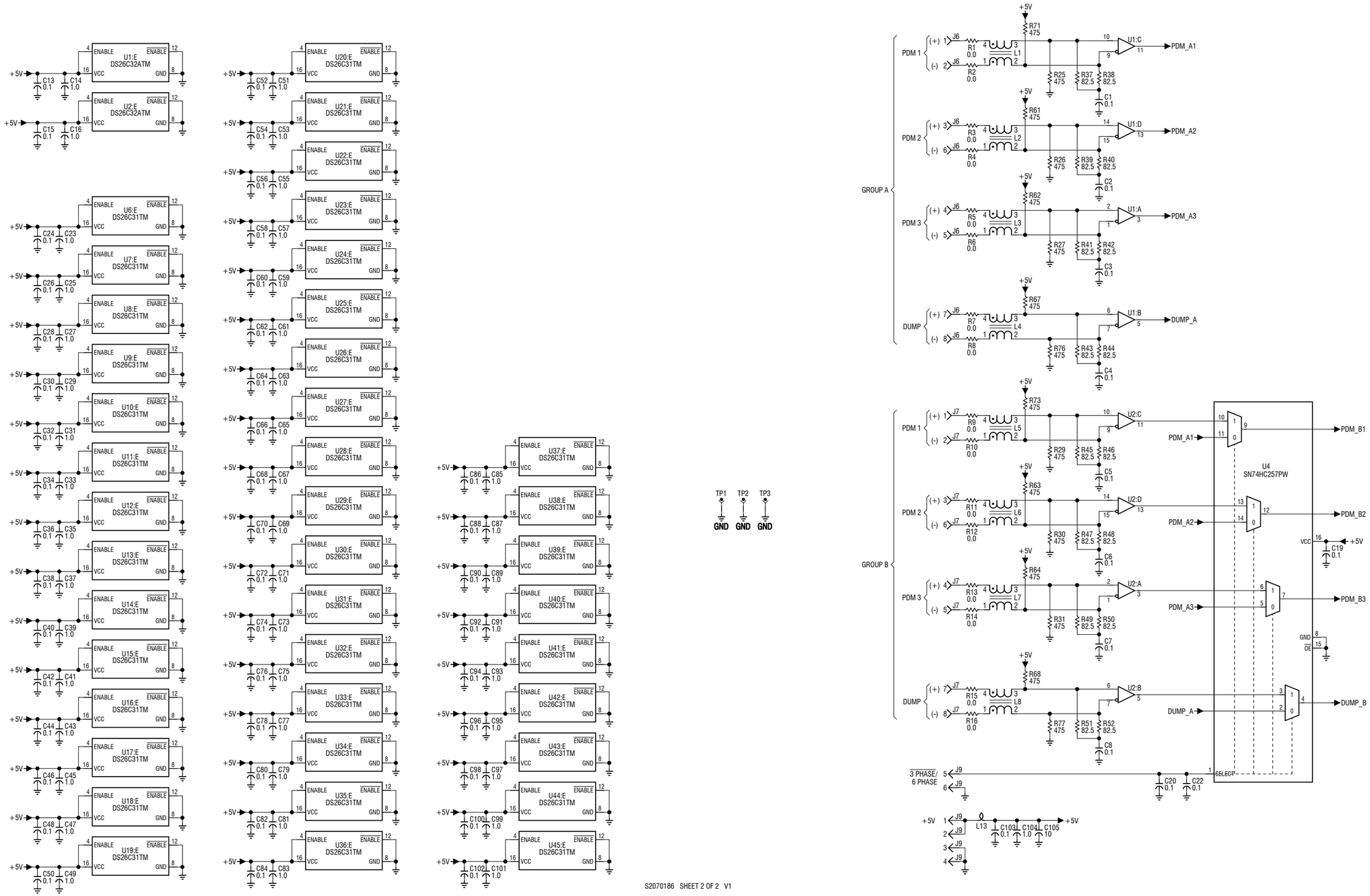

Figure SD-23: NAPI154 PDM Distribution PWB (Sheet 2 of 2)

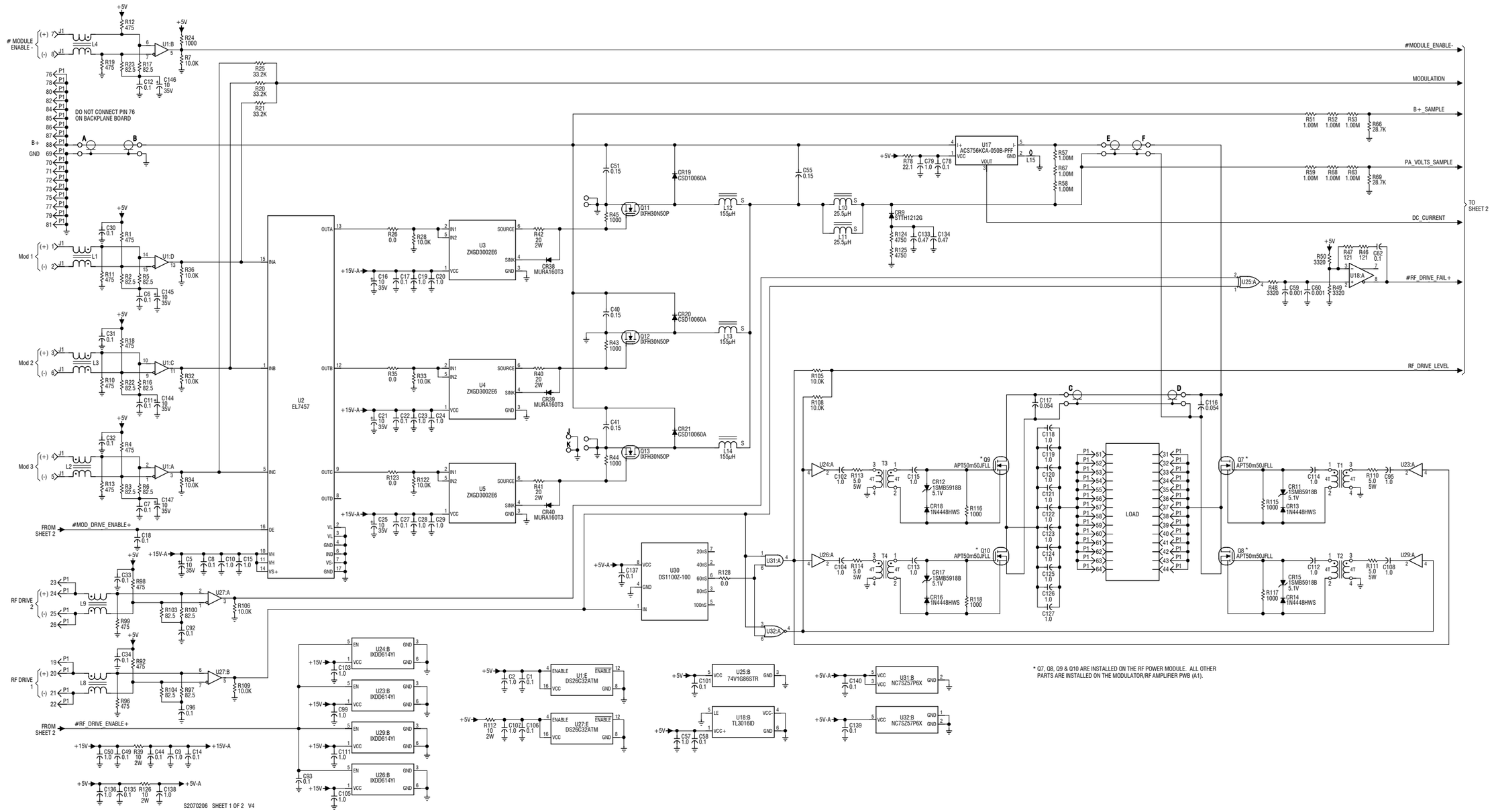

* Q7, Q8, Q9 & Q10 ARE INSTALLED ON THE RF POWER MODULE. ALL OTHER PARTS ARE INSTALLED ON THE MODULATOR/RF AMPLIFIER PWB (A1).

Figure SD-24: NAP39A RF Power Module and NAPA34A Modulator/Power Amplifier PWB (Sheet 1 of 2)

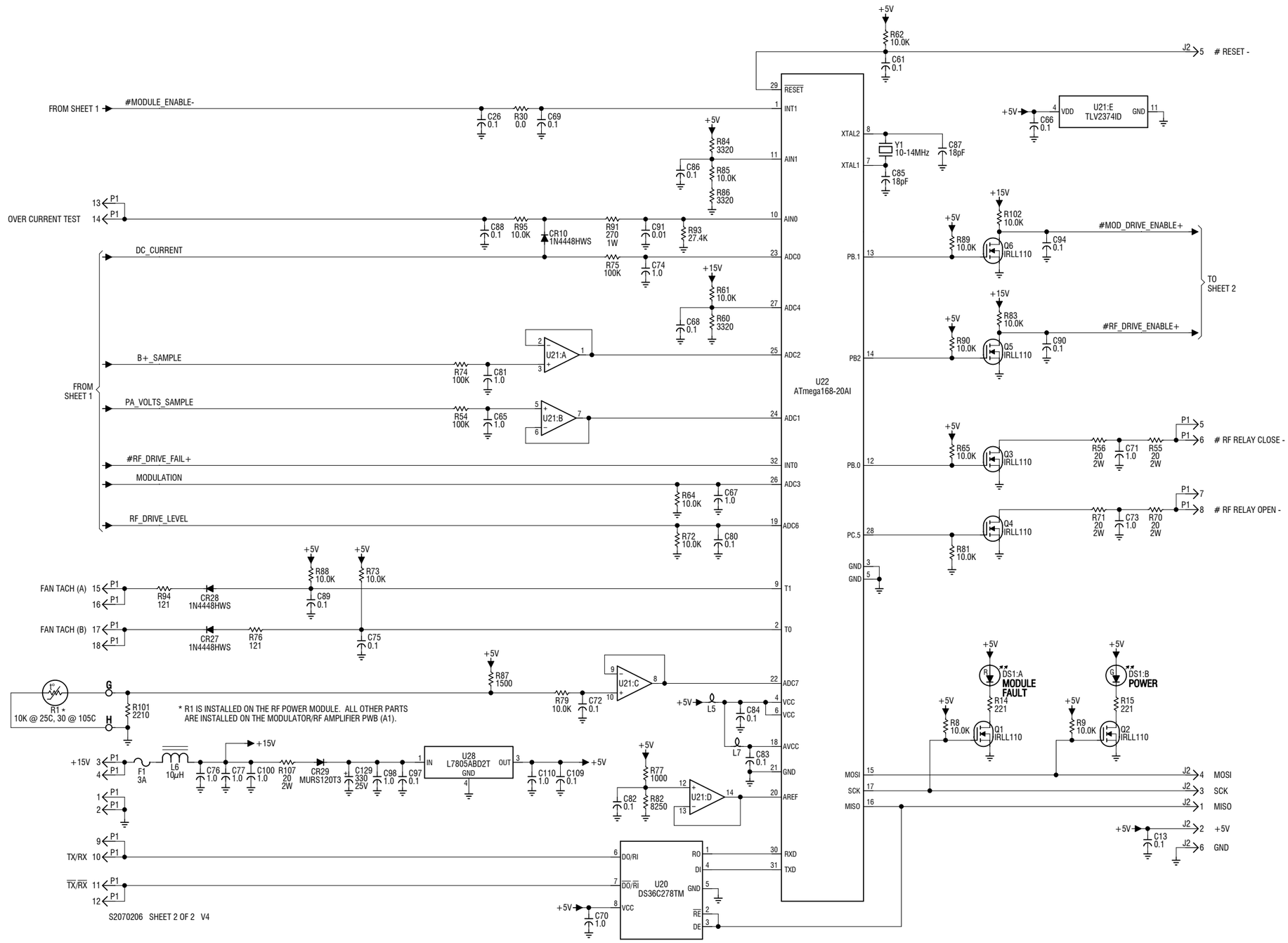

Figure SD-25: NAP39A RF Power Module and NAPA34A Modulator/Power Amplifier PWB (Sheet 2 of 2)

Section 6: Mechanical Drawings

This section contains mechanical drawings for assemblies of the transmitter. Dimensional drawings may be included. Refer to Table 6.1 on page 6-2 for an itemized list.

Assembly detail drawings for assemblies and modules that have separate manuals are not included. Refer to the appropriate maintenance manual for the assembly detail of these assemblies.

Identifying mechanical drawings

Each mechanical drawing in this section is identified by a number that is both the figure number and the page number. The numbers are assigned sequentially and are prefixed by the letters MD. Drawings in this section are listed in Table 6.1 on page 6-2.

Content of mechanical drawings

Mechanical drawings are illustrations that depict the location of electrical components and show assembly outline detail. Dimensional information is included, where appropriate.

When a module or assembly is the subject of its own assembly detail drawing, and it is also shown in a higher level assembly, the detail depicted in the higher level assembly may have minor differences from the module or assembly actually installed. In this case, always refer to the assembly detail drawing of the module or assembly for detailed information.

Locating a part or assembly on a mechanical drawing

1. When a part or assembly is assigned a reference designation (e.g., A2A1 or A2A1R1), refer to the family trees in Section 3, "Parts Lists" on page 3-1. Follow the family tree branches to the block that contains the desired reference designation and Nautel nomenclature (e.g., NAPA34A Modulator/Power Amplifier PWB). Note the reference designations and Nautel nomenclatures of all higher assemblies in the path.
   Example: A15 NAP39A RF Power Module > A15A1 NAPA34A Modulator/Power Amplifier PWB.

2. Refer to Table 6.1 on page 6-2. Use the reference designation and Nautel nomenclature to identify the appropriate mechanical drawing.
   Example: The NAPA34A Modulator/Power Amplifier PWB is shown on MD-15 and MD-16.

3. If necessary, refer to the referenced figure (e.g., MD-15 and MD-16) in the mechanical drawings at the end of this section and locate the next, lower-level assembly. Then, repeat this procedure until the desired part or assembly is found.

Table 6.1: List of Mechanical Drawings

Figure #	Title
MD-1	NX50 Transmitter (Front View)
MD-2	NX50 Transmitter (Rear View)
MD-3	NAH57C/01 RF Combiner Back Plane
MD-4	NAPI95/01 Power Module Interface PWB
MD-5	NAE96C/01 Control/Exciter Panel
MD-6	NAPC160B/01 Control/Interface PWB
MD-7	NAPE78A/01 Digital AM Exciter PWB
MD-8	NAPI106 Remote Interface PWB
MD-9	NAPX46 GPS Sync PWB (Optional)
MD-10	NAPI151 USB Audio Interface PWB (Optional)
MD-11	NAPI152A Rack Interface PWB
MD-12	NAPI98 RF Drive Distribution PWB
MD-13	NAPI154 PDM Drive Distribution PWB
MD-14	NAX243A B+ Distribution Assembly
MD-15	NAP39A RF Power Module
MD-16	NAPA34A Modulator/Power Amplifier PWB (Front View)
MD-17	NAPA34A Modulator/Power Amplifier PWB (Rear View)
MD-18	Fan Tray Assembly (207-8133)
MD-19	Voltage Probe (207-6111-01)
MD-20	Current Probe (207-6213-04)
MD-21	NAFP106B/01 Directional Coupler

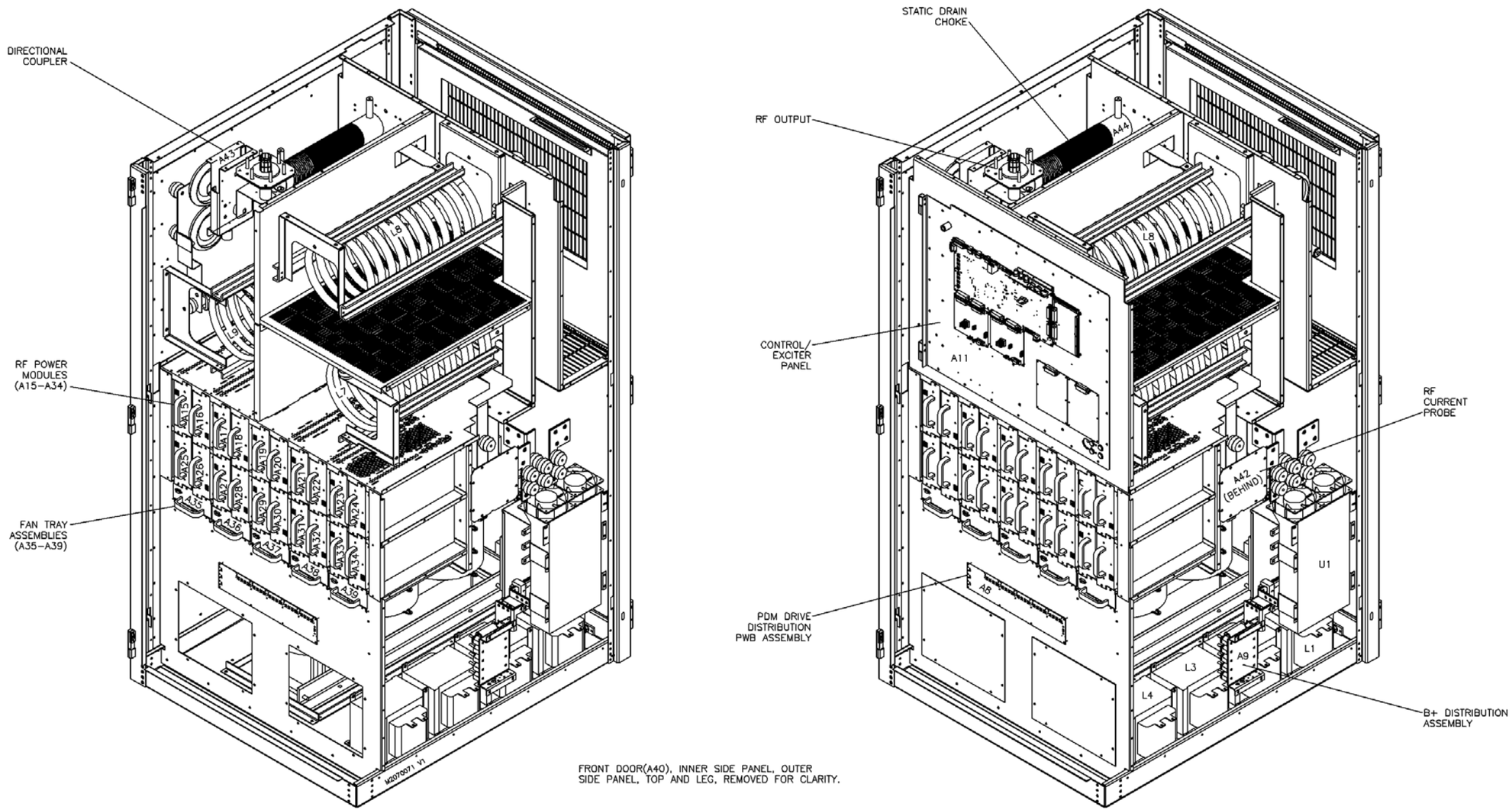

Figure MD-1: NX50 Transmitter (Front View)

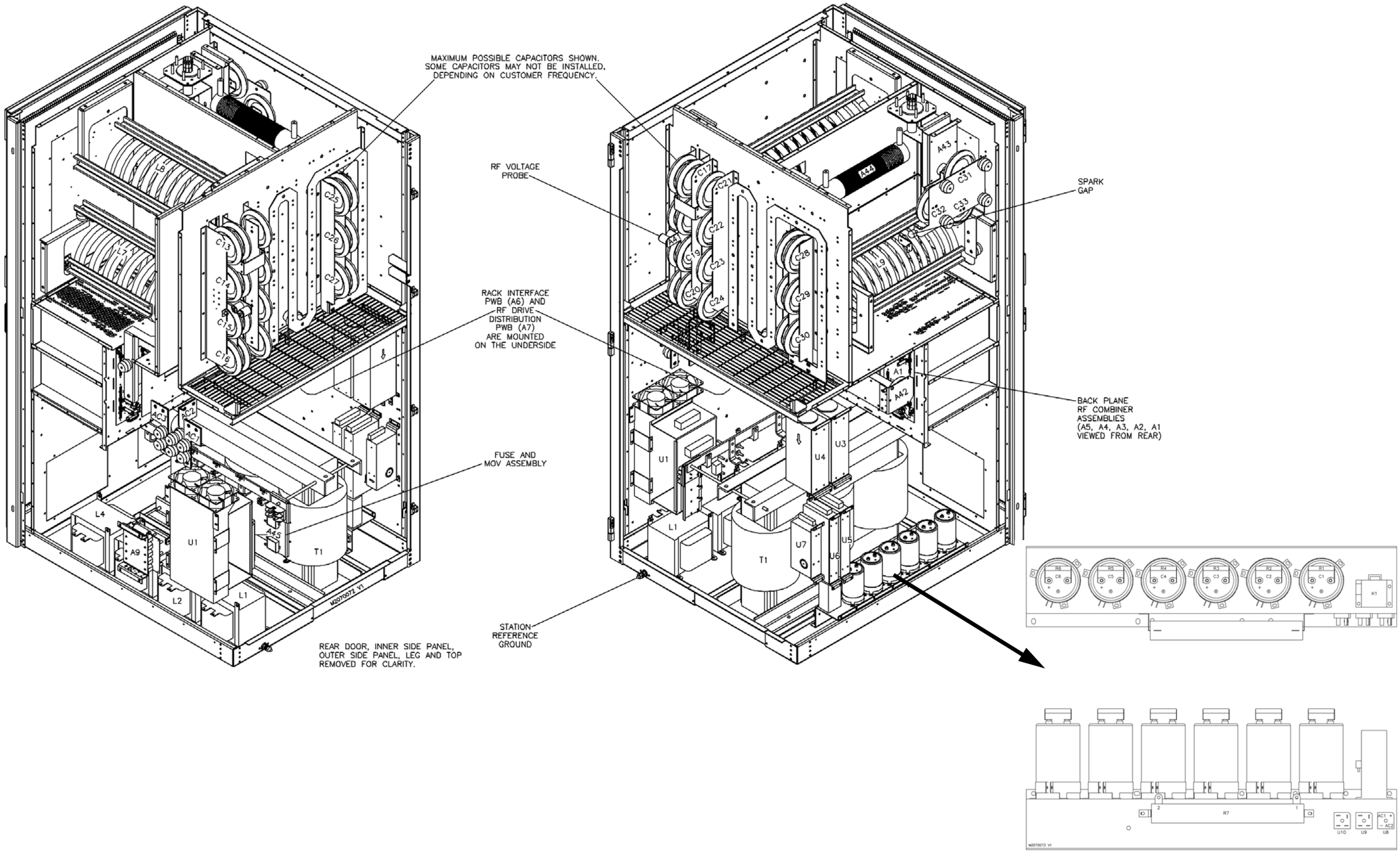

Figure MD-2: NX50 Transmitter (Rear View)

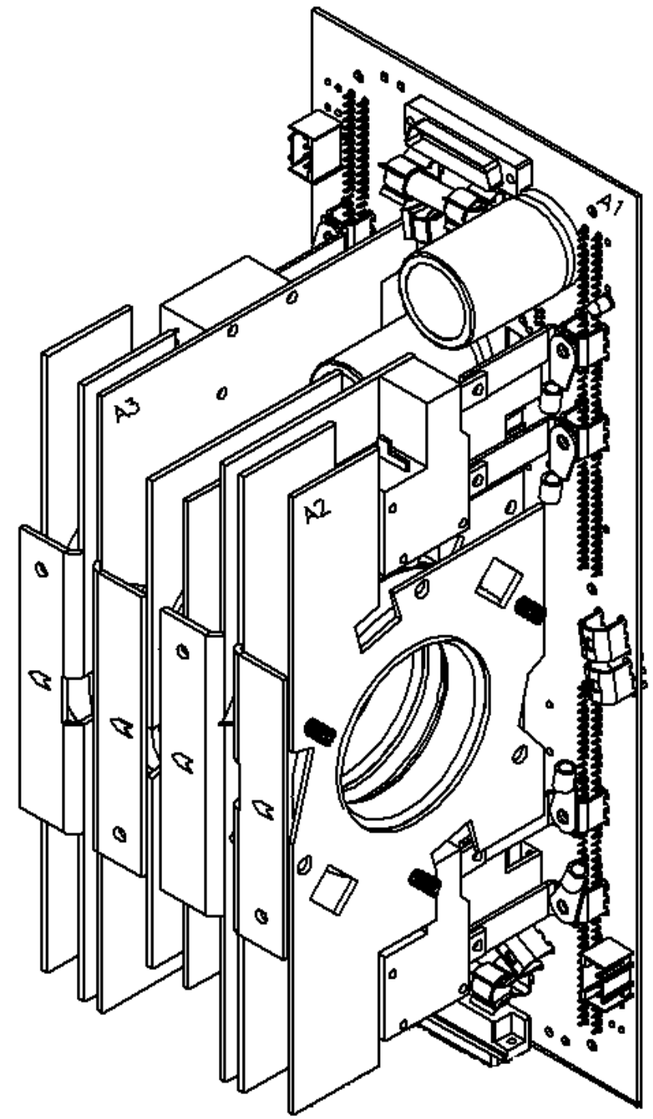

A1
Power Module
Interface PWB

A2 & A3
Transformer
Assemblies

Figure MD-3: NAH57C/01 RF Combiner Back Plane

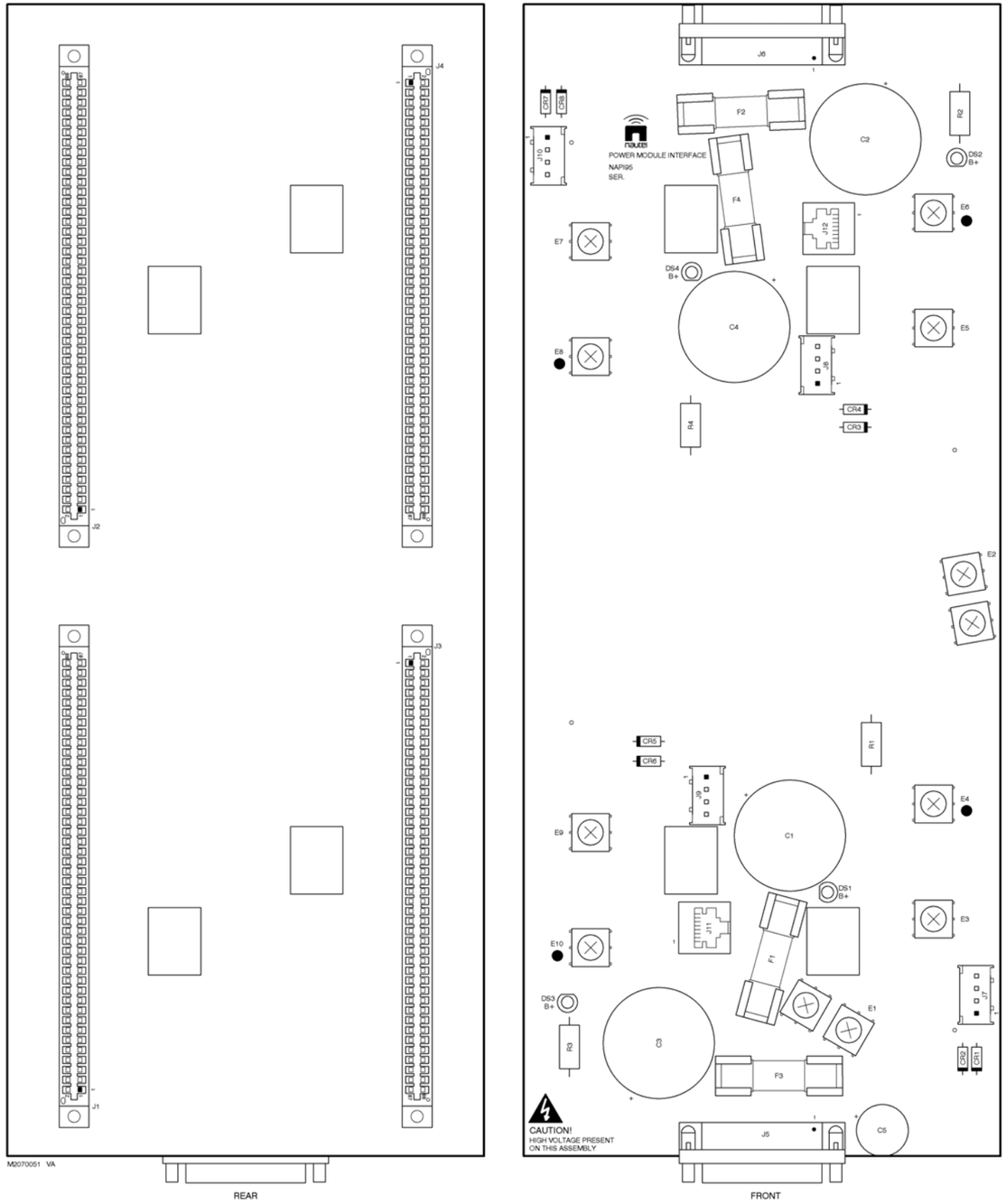

Figure MD-4: NAPI95/01 Power Module Interface PWB

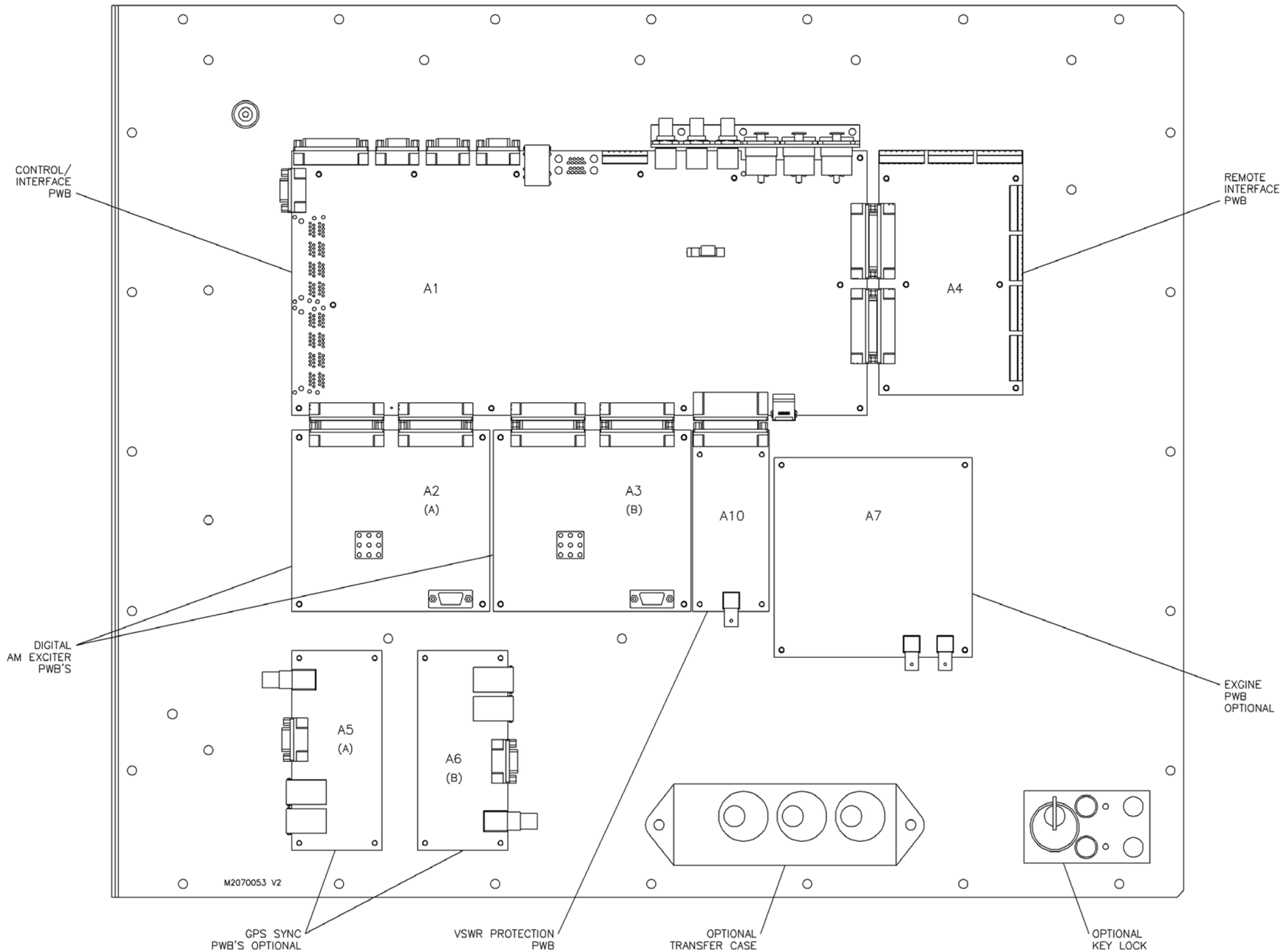

Figure MD-5: NAE96C/01 Control/Exciter Panel

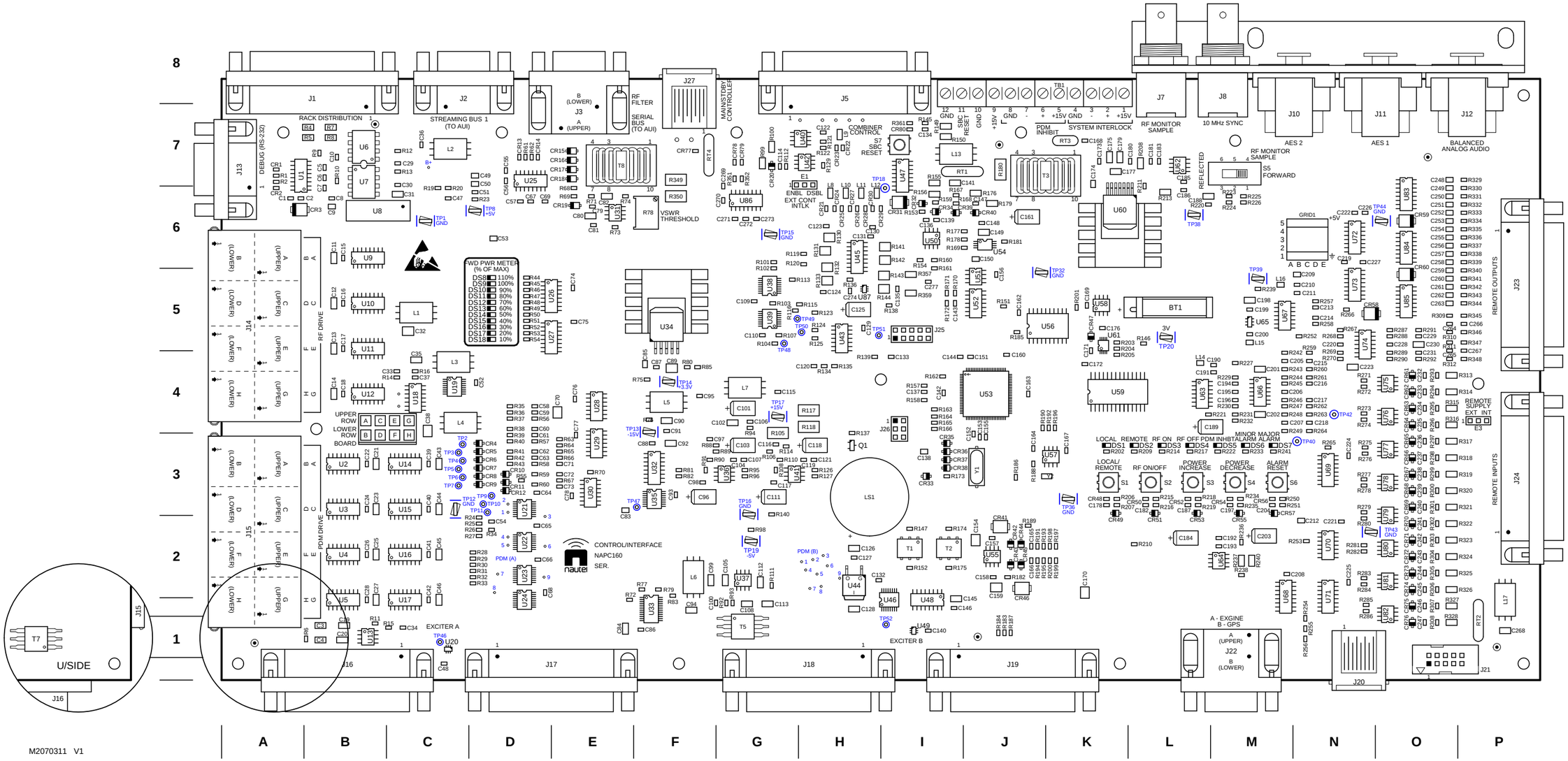

Figure MD-6: NAPC160B/01 Control/Interface PWB

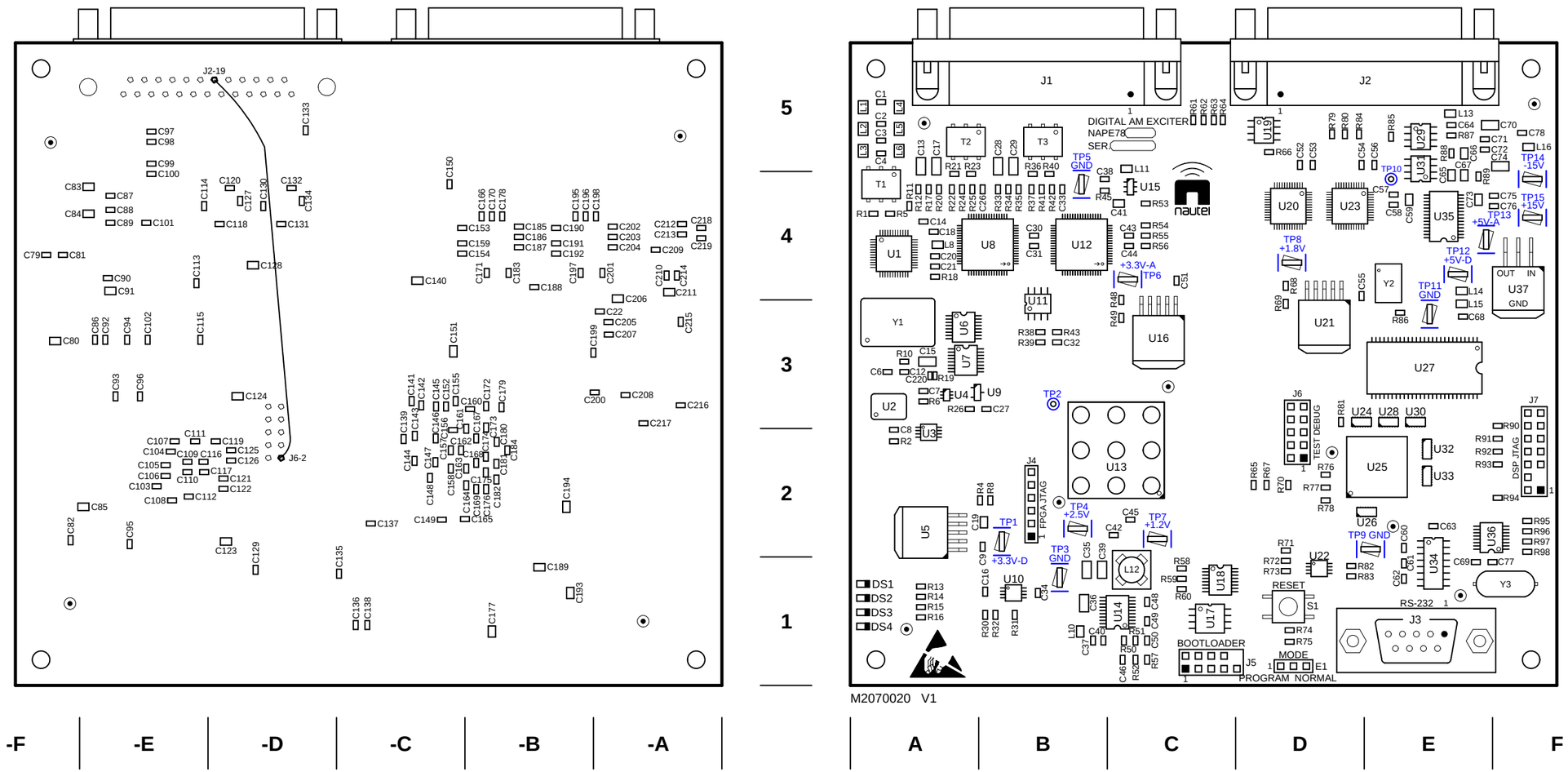

Figure MD-7: NAPE78A/01 Digital AM Exciter PWB

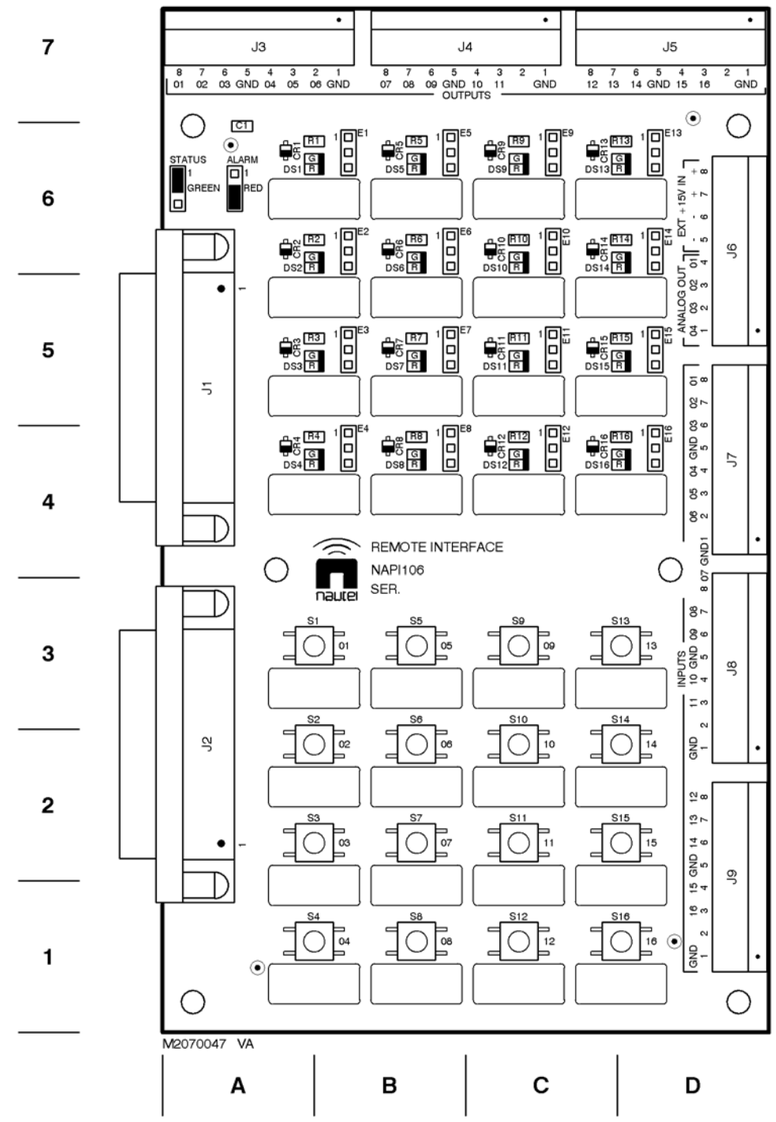

Figure MD-8: NAPI106 Remote Interface PWB

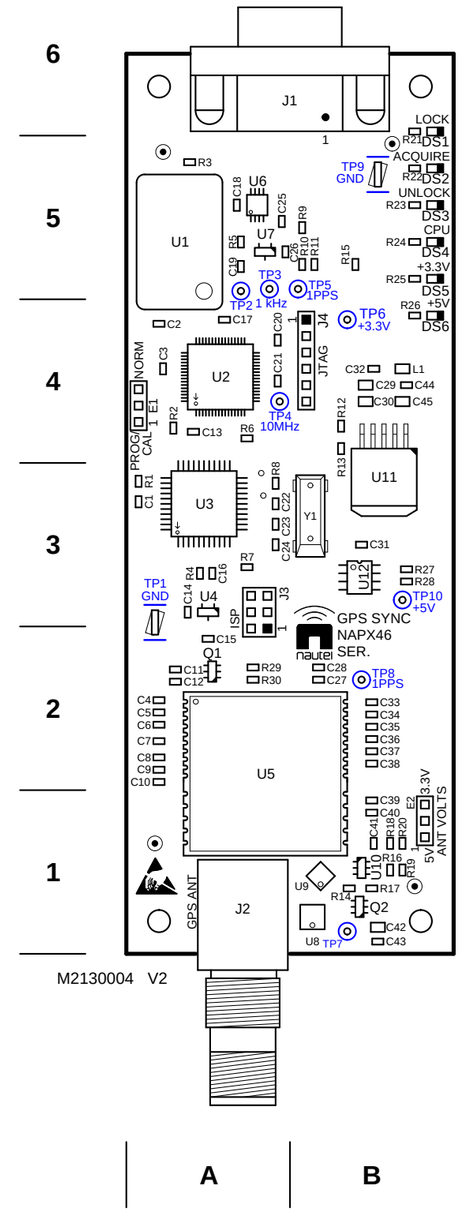

Figure MD-9: NAPX46 GPS Sync PWB (Optional)

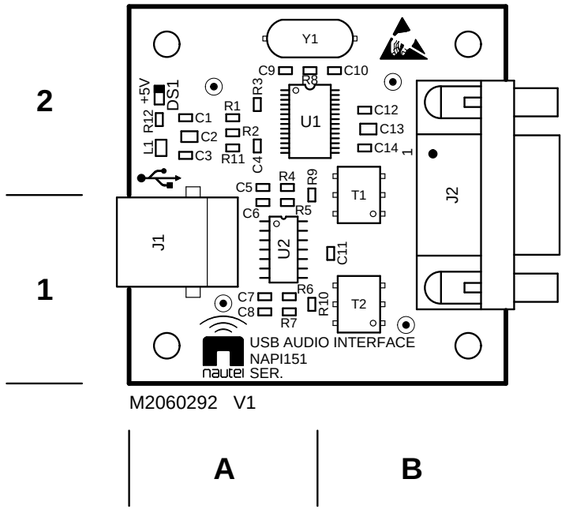

Figure MD-10: NAPI151 USB Audio Interface PWB (Optional)

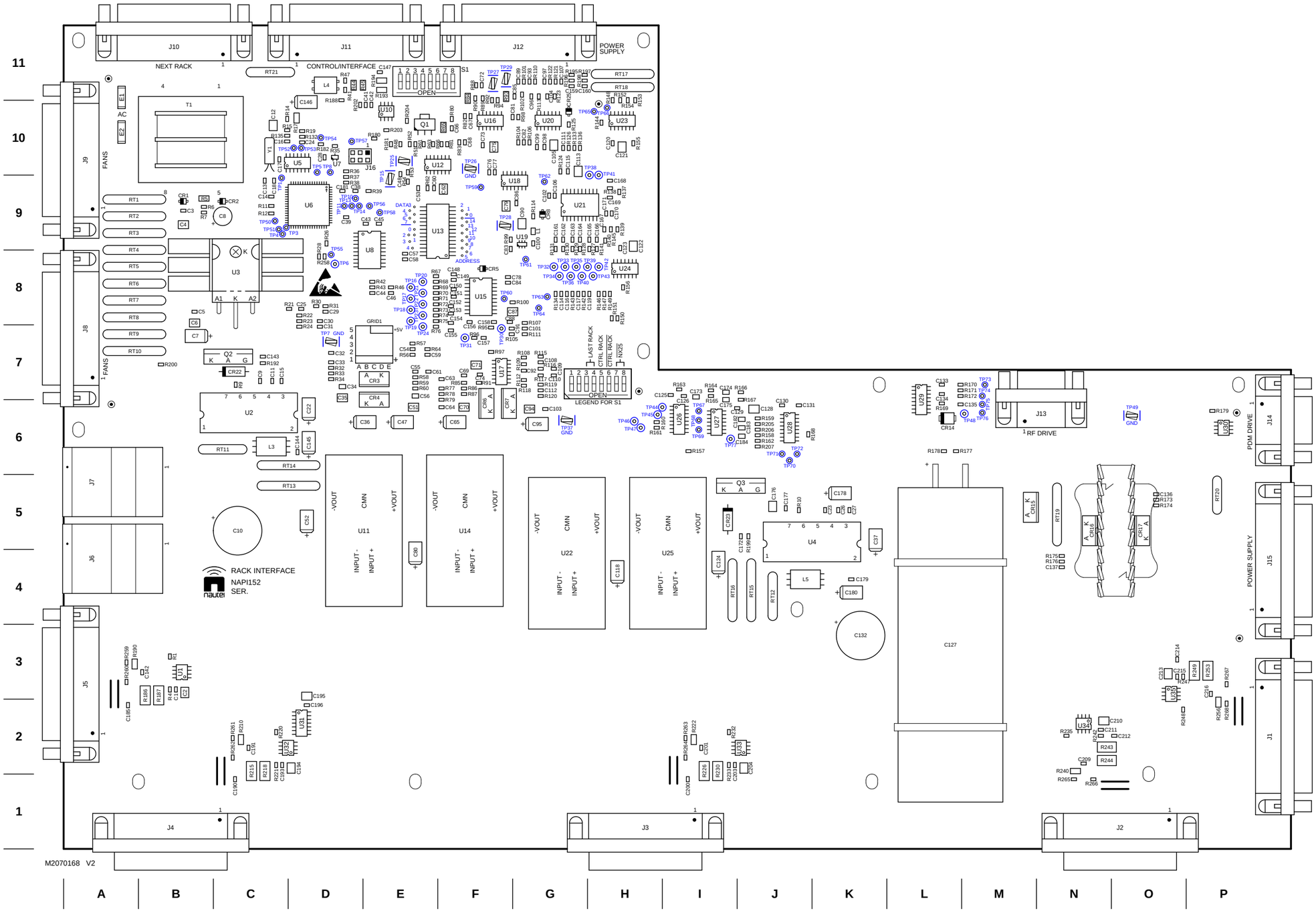

Figure MD-11: NAPI152A Rack Interface PWB

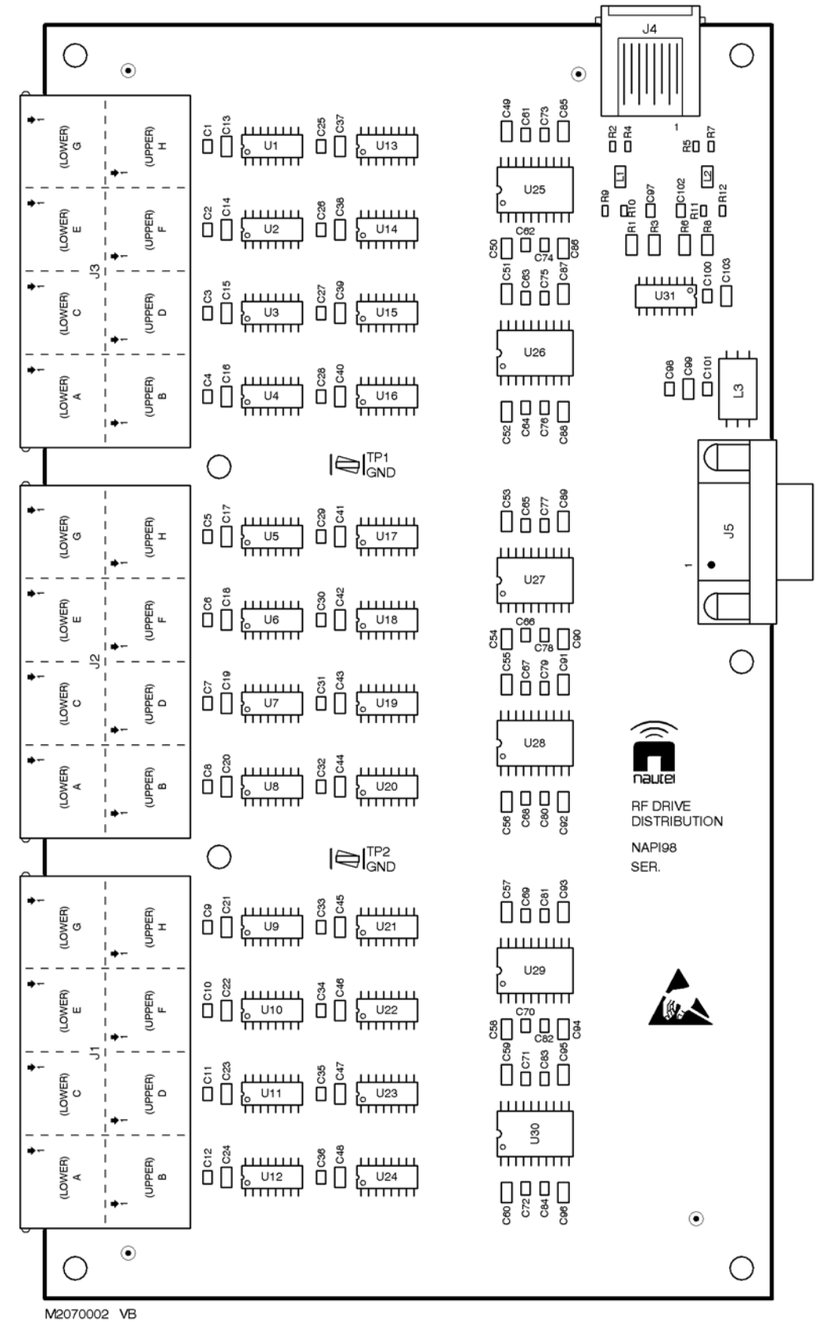

Figure MD-12: NAPI98 RF Drive Distribution PWB

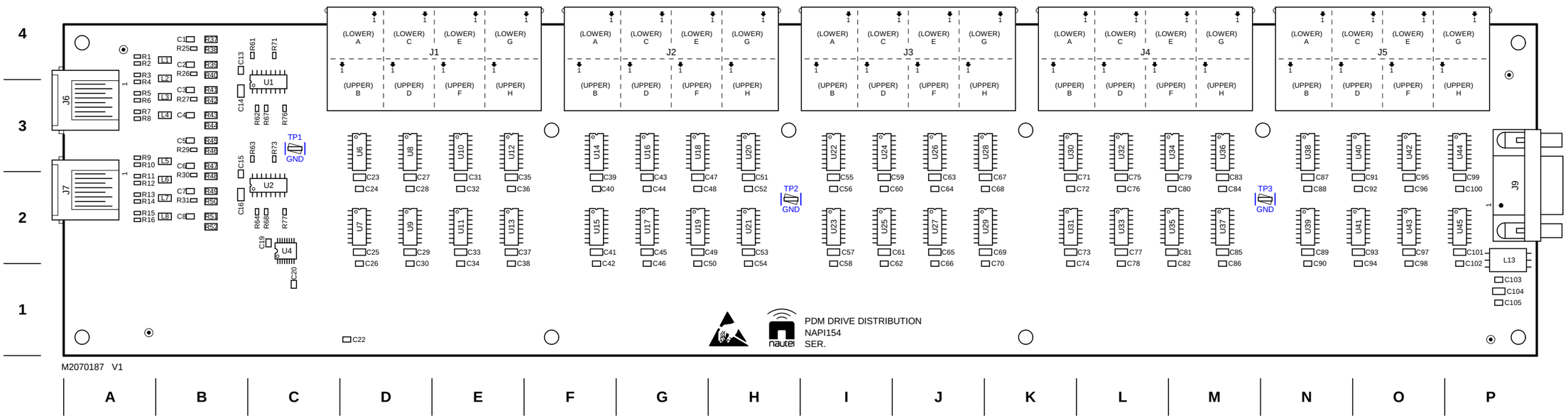

Figure MD-13: NAPI154 PDM Drive Distribution PWB

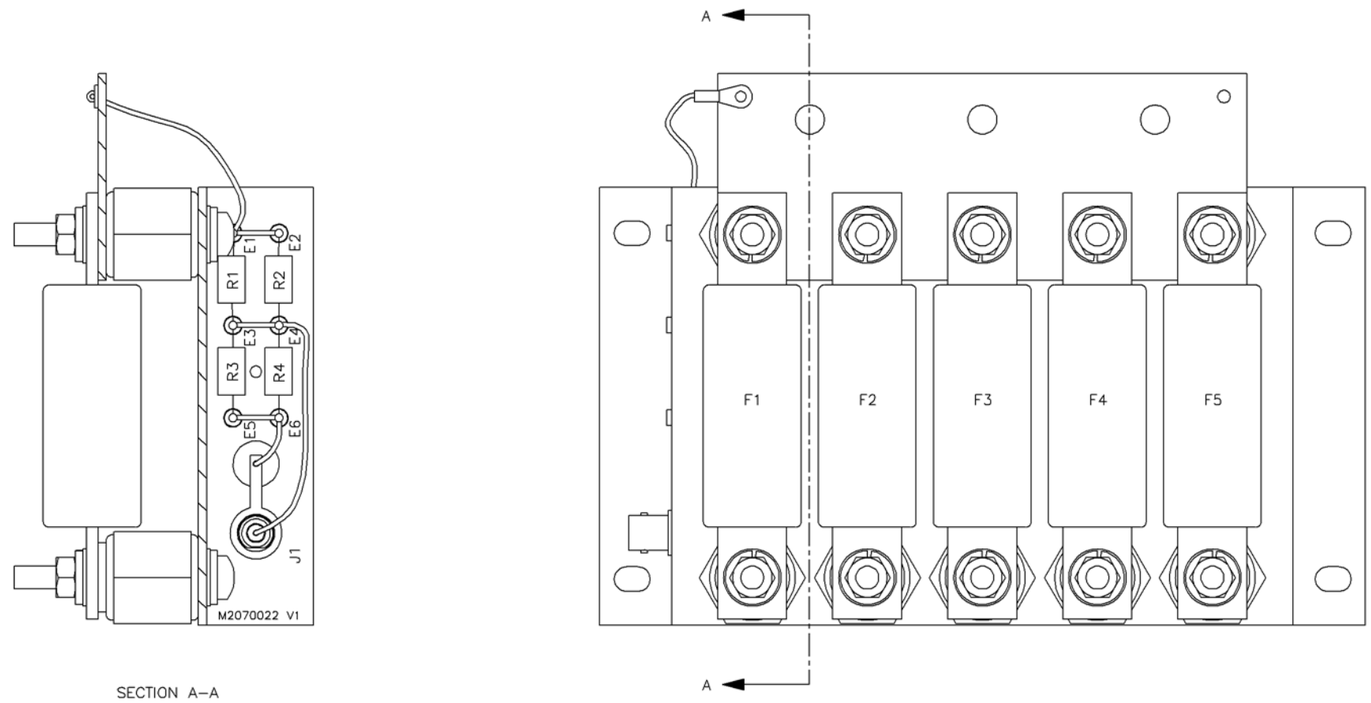

Figure MD-14: NAX243A B+ Distribution Assembly

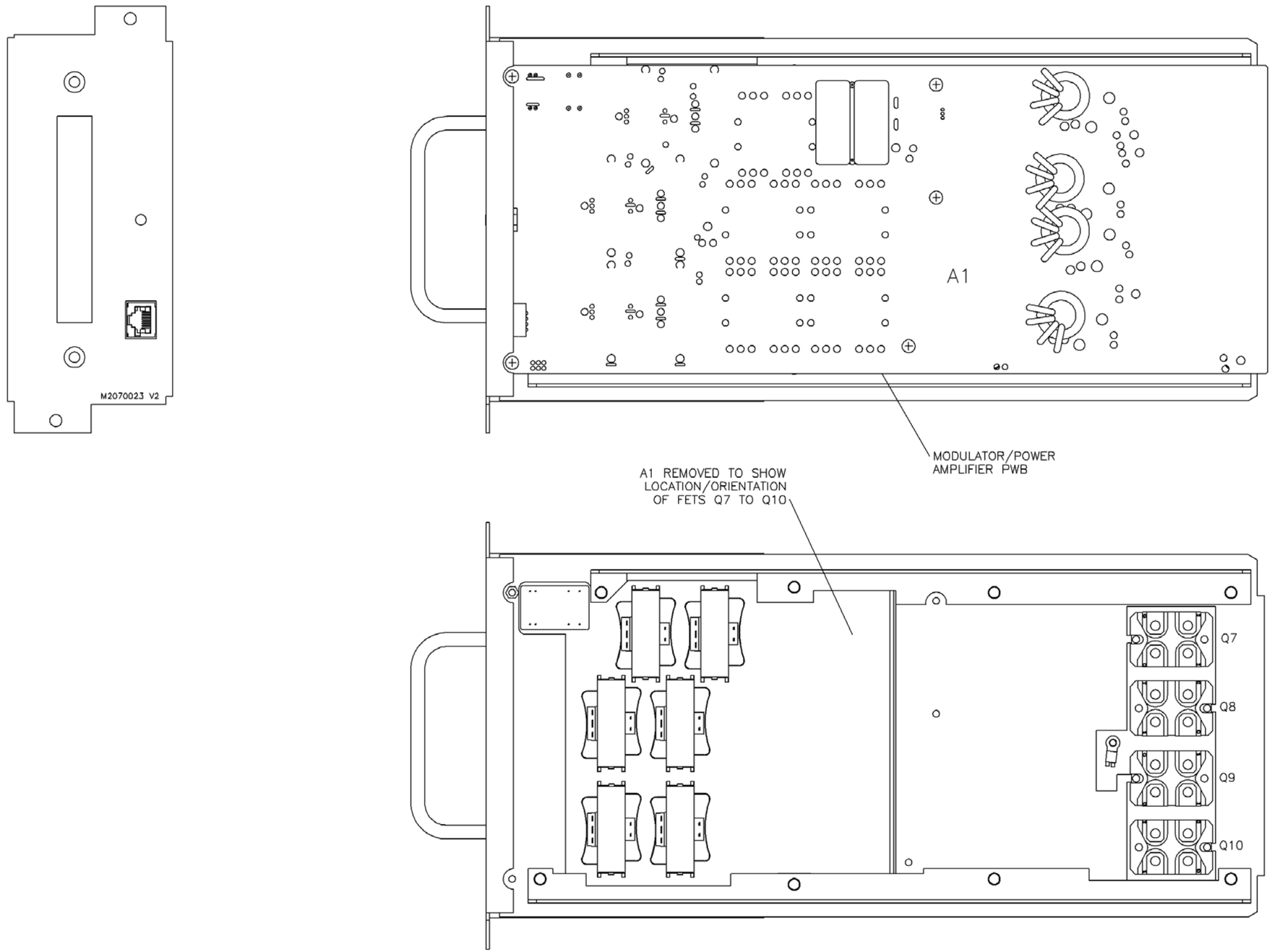

Figure MD-15: NAP39A RF Power Module

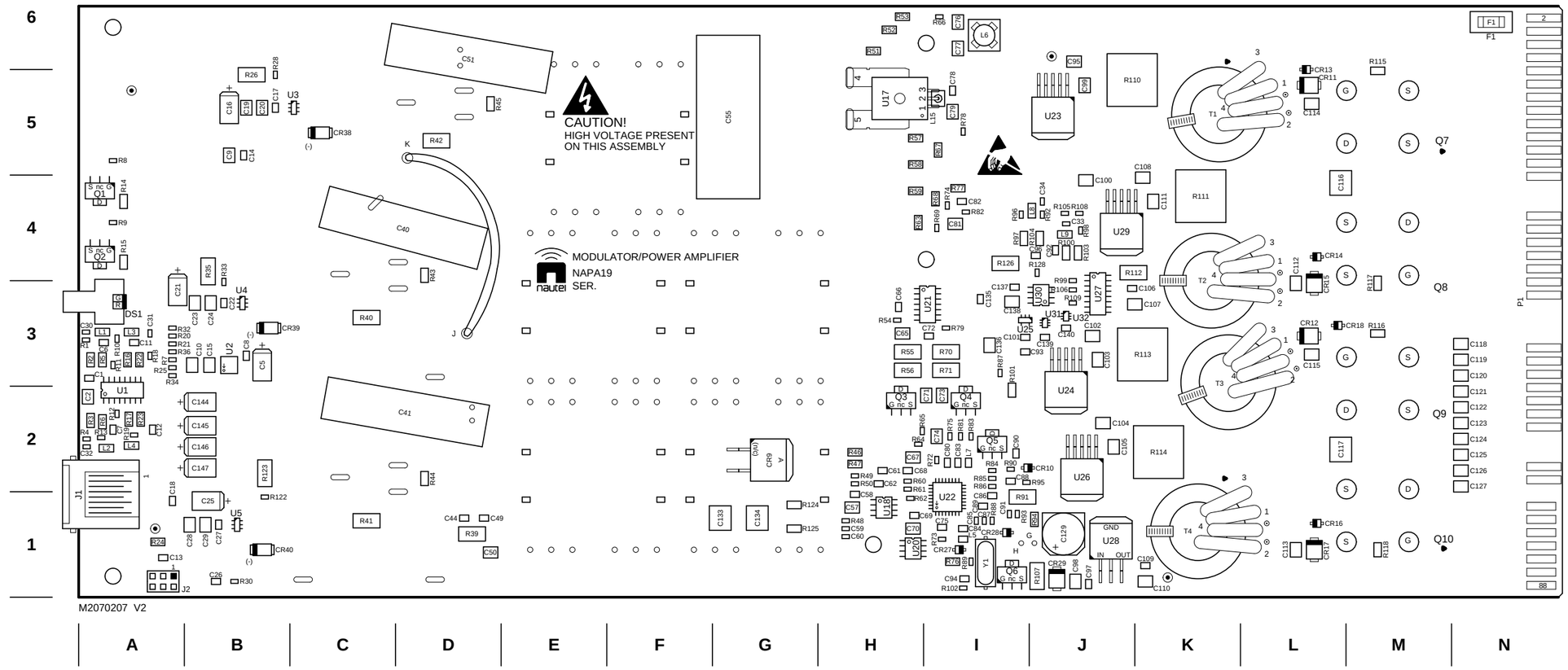

Figure MD-16: NAPA34A Modulator/Power Amplifier PWB (Front View)

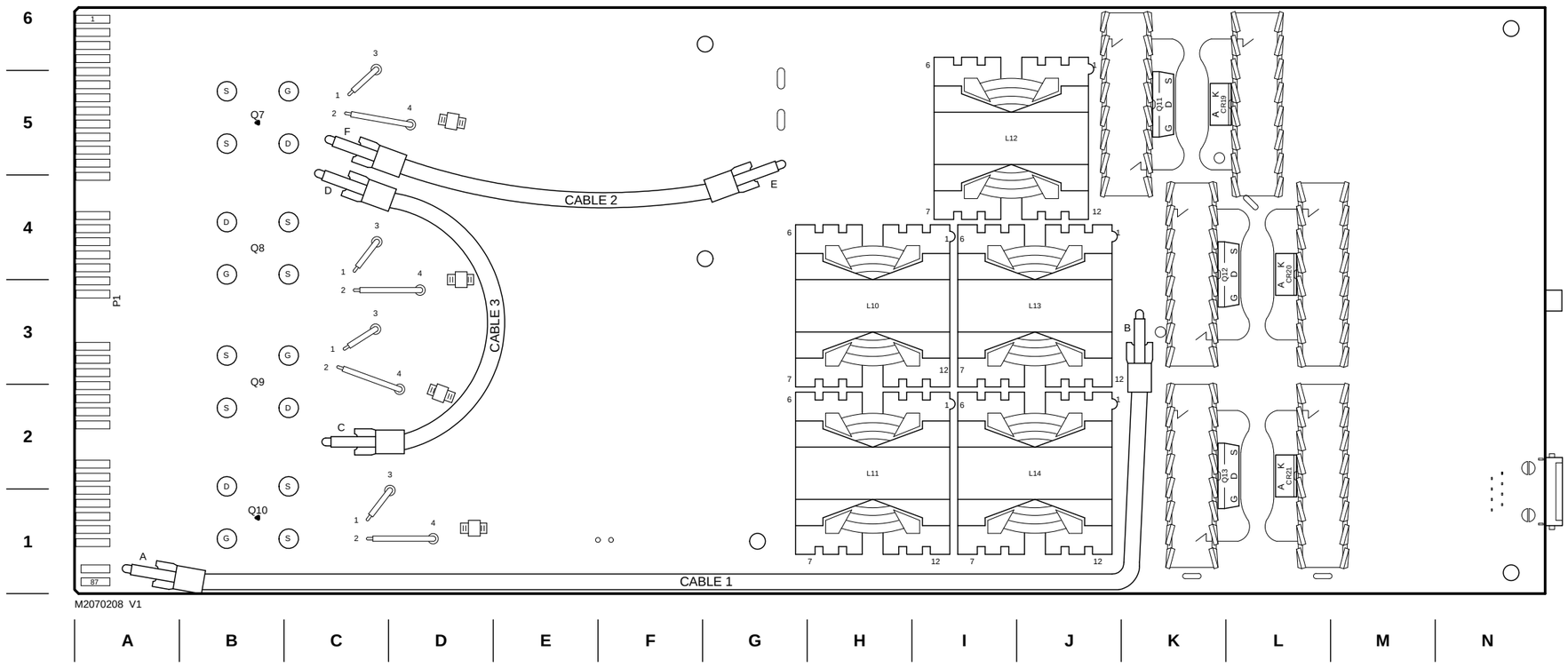

Figure MD-17: NAPA34A Modulator/Power Amplifier PWB (Rear View)

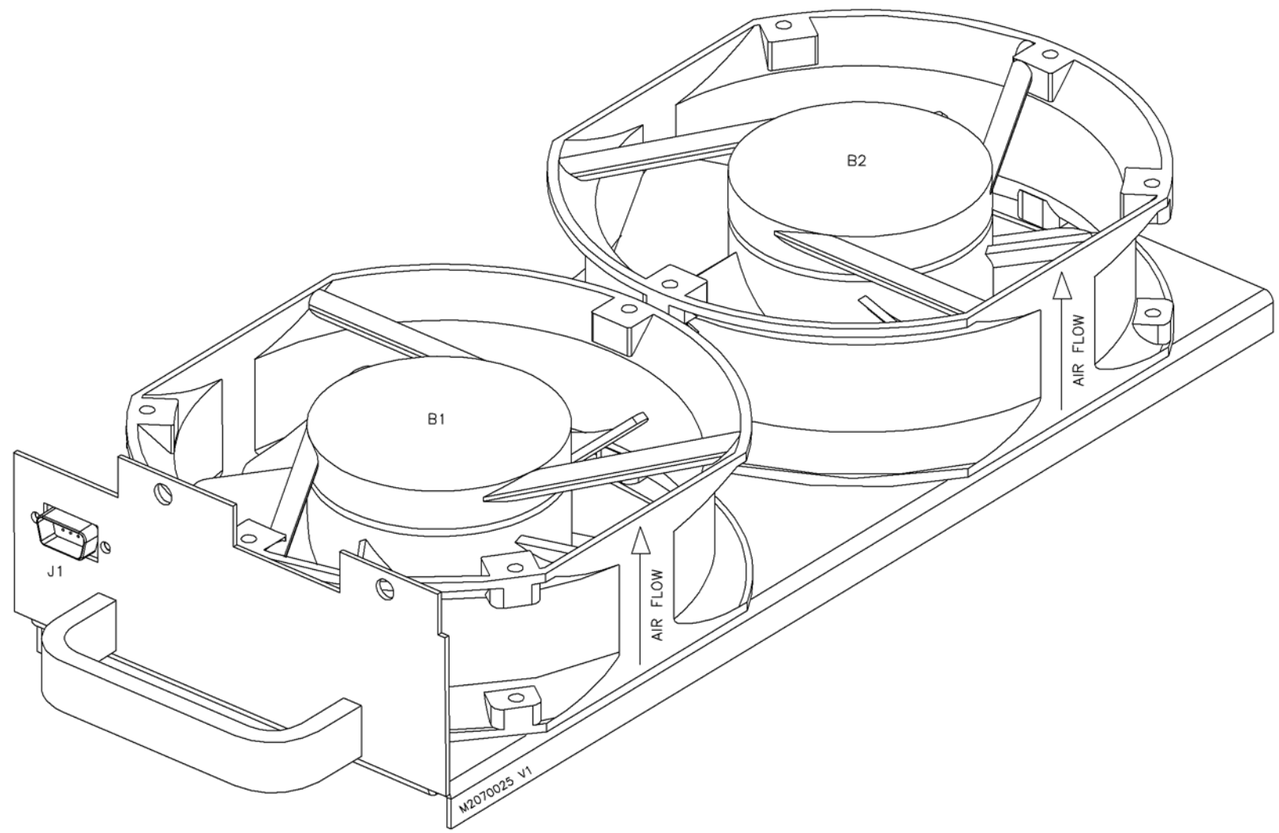

Figure MD-18: Fan Tray Assembly (207-8133)

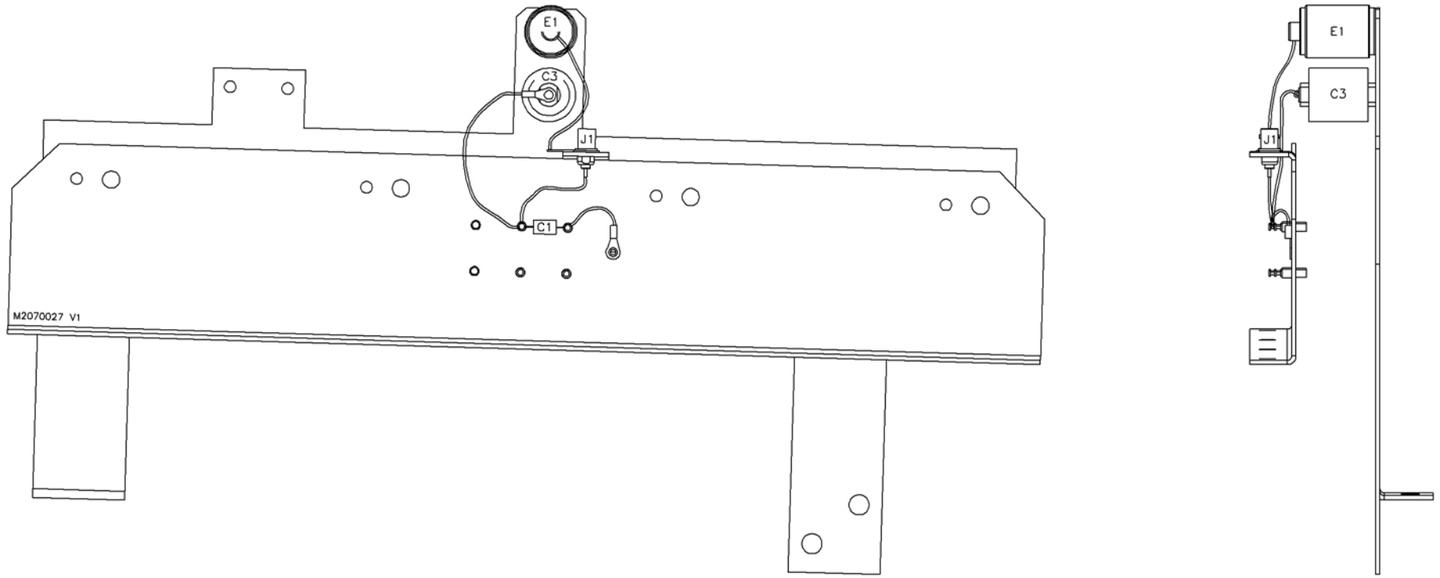

Figure MD-19: Voltage Probe (207-6111-01)

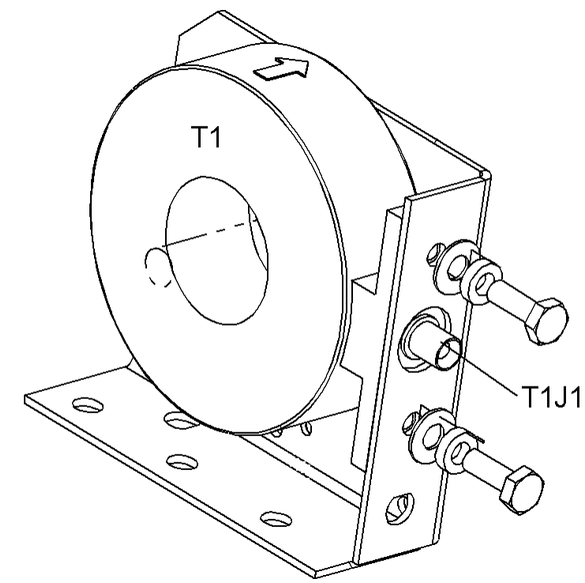

Figure MD-20: Current Probe (207-6213-04)

A1 DETAIL

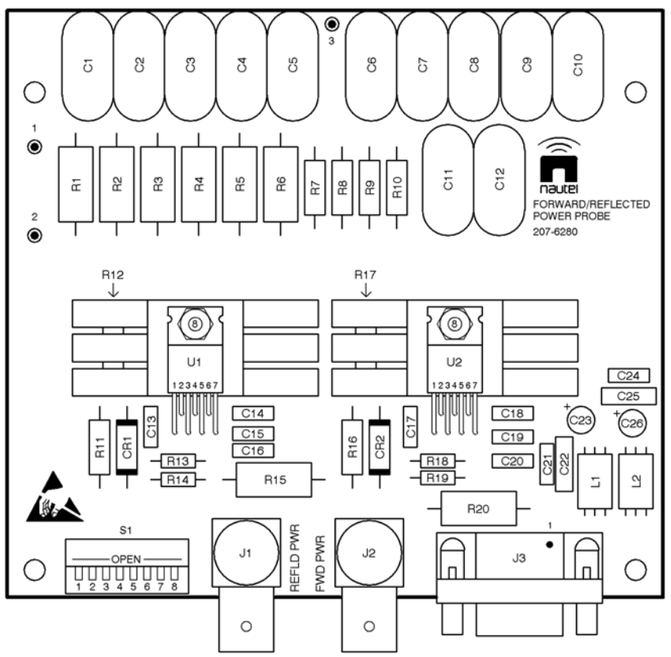

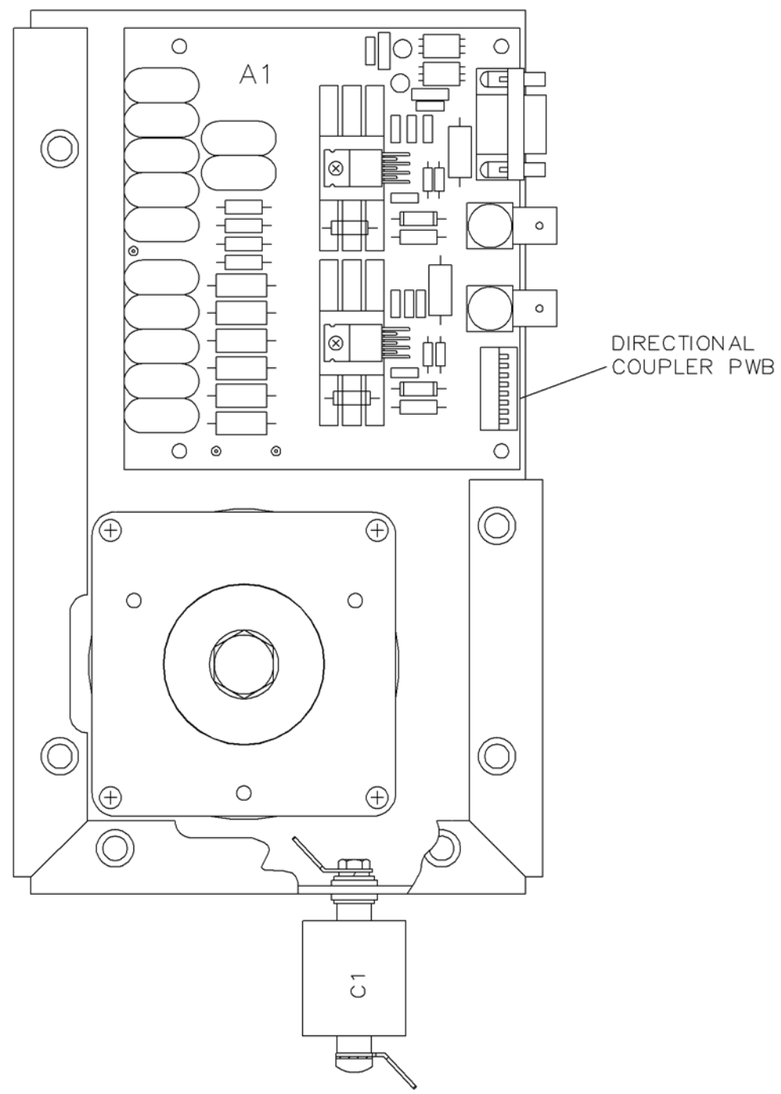

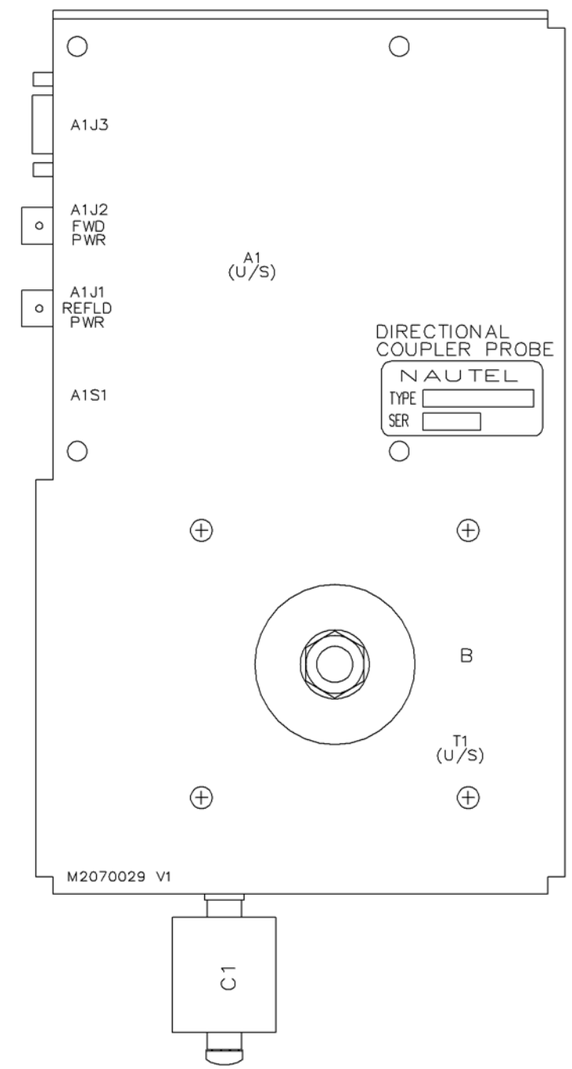

Figure MD-21: NAFP106B/01 Directional Coupler

SECTION 7: List of terms

This section defines some of the terms that are used in Nautel documentation.

ADC. Analog to Digital Converter.

AES-EBU. Audio Engineering Society/European Broadcasting Union (AES/EBU) is the name of a digital audio transfer standard. The AES/EBU digital interface is usually implemented using 3-pin XLR connectors (the same type connector used in professional microphones). One cable carries both left and right-channel audio data to the receiving device.

B+. The high voltage dc generated by the transmitter's ac power supply for use within the transmitter. The B+ voltage is used to supply the transmitter's modulators and other transmitter circuitry.

Cutback. A reduction in RF output power, caused by a total power limit fault or the occurrence of three shutbacks within a five second period.

DAC. Digital to Analog Converter.

DAM. Dynamic Amplitude Modulation.

DCC. Dynamic Carrier Control.

DRM. Digital Radio Mondiale. A set of digital audio broadcasting technologies designed to work existing AM radio channels.

DSP. Digital Signal Processing.

FPGA. Field Programmable Gate Array.

HD Radio. HD Radio is another term for In Band On Channel (IBOC) technology. HD Radio is a trademark of iBiquity Digital Corporation.

IBOC. Nautel In-Band-On-Channel technology provides high quality digital audio over existing AM radio channels.

IPM. Incidental Phase Modulation

Latching alarm. An alarm that, while active, keeps the transmitter in an 'RF inhibited' state. This type of alarm (e.g., High SWR Shutdown) require a reset - locally or remotely - to attempt to restore transmitter operation.

NE IBOC. Nautel's In-Band-On-Channel signal generator. See IBOC. Required for NX series IBOC installations.

PDM. Pulse Duration Modulation.

Preset. A setting that controls power level, active exciter, and power scheduler status on a time-of-day and date basis. Exciters can be configured on a preset for a specific operating mode (for example, Exciter A - conventional AM, and Exciter B - IBOC). The NX50 allows you to pre-program multiple presets.

Shutback. A complete loss of RF output power, caused by any one of a variety of faults, including high VSWR, low B+ voltage, high RF current, RF drive failure, external interlock or spark gap.

Surge protection board. An electrical panel that protects equipment from electrical surges in the ac power supply, antenna or site ground caused by lightning strikes.

VSWR. Voltage standing wave ratio. This is an expression of the ratio of forward voltage to reverse voltage on the feedline and antenna system. An ideal VSWR of 1:1 provides maximum transmitter-antenna efficiency.

NX50 TROUBLESHOOTING MANUAL

Document: NHB-NX50-TRB

Issue: 3.2 2016-02-08

Nautel Limited
10089 Peggy's Cove Road
Hackett's Cove, NS Canada B3Z 3J4

Toll Free: +1.877.6NAUTEL (662.8835)
(Canada & USA only) or
Phone: +1.902.823.3900 or
Fax: +1.902.823.3183

Nautel Inc.
201 Target Industrial Circle
Bangor, Maine USA 04401

Phone: +1.207.947.8200
Fax: +1.207.947.3693

Customer Service (24-hour support)
+1.877.628.8353 (Canada & USA only)
+1.902.823.5100 (International)

Email: support@nautel.com
Web: www.nautel.com

© Copyright 2016 NAUTEL. All rights reserved.